ISSUED DATE	REFERENCE PERSON	REVISION #
1/23/2015	Administrator	
REVISION DATE	APPROVED BY	PAGE

ARCHITECTURE AND ENGINEERING DIVISION PROJECT MANAGER'S MANUAL AND BUILDING DESIGN AND CONSTRUCTION STANDARDS

by

Architecture & Engineering Division
Department of General Services
City of Tucson

Architecture and Engineering Project Manual and Construction Standards Index

The General Services Department A/E Division's Design Standards are intended to standardize the requirements and expectations of everyone involved in each project at each step of the design. Compliance is required where called for in contractual agreements. Where modifications to these standards are proposed, submit comprehensive explanatory data to the A/E Division's Project Manager for review.

TABLE OF CONTENTS

Introduction - see Section 01 PM Manual

Project Manager's Manual

Section 01: Building Design and Construction Standards and Project Manager's Manual Overview
Section 02: Schedule
Section 03: Planning
Section 04: Construction Costs
Section 05: Fee Proposal
Section 06: Survey Requirements
Section 07: Structural
Section 08: Master Plan
Section 09: Program
Section 10: Schematic Design
Section 11: Design Development Review
Section 12: Construction Documents
Section 13: Space Criteria
Section 14: Work Space Standard
Section 15: Work Order Estimate
Section 16: Contracts
Section 17: Bid Steps
Section 18: Construction Closeout
Section 19: ADA Requirements
Section 20: Plans Guidelines for P.M.'s & consultants
Section 21: Cell Tower Plan Review & site Inspection

Construction Standards Manual

Division 01 General Requirements
Division 02 Existing Conditions
Division 03 Concrete
Division 04 Masonry
Division 05 Metals
Division 06 Wood, Plastics and Composites
Division 07 Thermal and Moisture Protection
Division 08 Openings
Division 09 Finishes
Division 10 Specialties
Division 11 Equipment
Division 12 Furnishings
Division 13 Special Construction
Division 14 Conveying Equipment
Division 21 Fire Suppression
Division 22 Plumbing
Division 23 HVAC
Division 25 Integrated Automation Standard (BAC or EMCS)
Division 26 Electrical
Division 27 Communications
Division 28 Electronic Safety
Division 29 Landscape
Division 31 Earthwork
Division 32 Exterior Improvements
Division 33 Utilities
Division 50 COT Solar
Division 51 COT Drawing Standards (Autocad/Revit)

INTRODUCTION – Building Design and Construction Standards and Project Manager's Manual

The Building Standards and Project Manager's Manual (jointed called the A&E Standards) were prepared by the City of Tucson General Services Department, Architecture and Engineering (A&E) Division as requirements and expectations of everyone involved in City of Tucson building construction projects. The standards are prepared as an aid to A&E Project Managers, Design Consultants, Contractors/Construction Managers at Risk and Job Order Contractors. The criteria set forth herein are designed to create standards for the designing and constructing of new and renovation of existing City facilities. The intent is to ensure quality of design, economy of operation and ease of maintenance for City facilities.

The latest version of the A&E standards can be found at http://www.tucsonaz.gov/generalservices/architecture

The A&E Standards establish the City A&E Project Manager's expectations of consultants, such as: expected deliveries and distribution, owners' preferences, maintenance preferences, and preferred methods and materials. However, these A&E Standards are not to be considered a contract document, they are to be considered supplementary requirements. The A&E Standards impose no obligations or requirements on architects, engineers and contractors. The A&E Standards must never be used as a substitute or supplement to the specifications and other contract requirements. The A & E Standards do not replace requirements of applicable federal, state, county statutes and City of Tucson codes and ordinances.

The A&E Standards are "living" documents. Sections are updated and modified frequently. The A&E Standards contain many references to other publications and documents in order to minimize any repetition of information found in other publications. A record copy of the A&E Standards will not be filed at the beginning of each project. If any item becomes a point of contention, the designer and/or consultant project manager should review the latest version of the standards. If modifications to the A&E Standards are proposed, submit comprehensive explanatory data in an electronic format to the A&E Division's Administrator.

A&E Division Mission Statement

The Architecture and Engineering Division provides expert planning with professional project and budget management for the functional design and cost-effective construction of healthy, safe, code compliant and energy efficient buildings for the City of Tucson.

Provide switching of lighting with photocells when used with day lighting, include shut off during unoccupied times.

Exit path lighting shall remain energized at all times.

Occupancy sensors shall be used in common use areas.

Outdoor lighting shall be evaluated for stand-alone photovoltaic systems.

Mechanical System:

Minimum SEER for packaged equipment to be 13or higher with a COP of 3.4 for heat pumps.

Utilize "Free" cooling if possible.

Specify high efficiency heating and cooling systems.

Utilize outside air controllers such as CO2 monitors when appropriate as over-ride for a minimal outside air setting. An early morning purge recommended.

Simplify the controls. Use windup timers whenever possible for mechanical systems.

Water Conservation:
The City is very concerned with water usage and would like to minimize the use of potable waters in our facilities. It is anticipated that as a part of the strategies for meeting the LEED silver requirement, the consultant consider ways for the project to gain as many as six points for water efficiency (5 in the water efficiency area and 1 in the innovative area due to exemplary water savings or education in water efficiency). Each strategy should be discussed along with the implementation cost, water and cost savings and other benefits to be weighed by the project team.

The following strategies shall be considered:

Waterless urinals

Dual Flush Toilets

Passive water harvesting

Native deciduous tree shading at ground level

Design a complete irrigation system to provide water to the necessary plant material for both new and existing systems associated with any new work. The system shall be automatic, underground, and designed to conserve water and be as efficient as possible while still meeting the water requirements for all plantings. The system shall separate from the domestic water service and have its own meter. Where reclaimed water is available, system shall be connected to reclaimed water. Refer to City of Tucson Water Reclaimed Water User's Manual with supplements A & B.

V. SECTION 013500 SPECIAL PROCEDURES

ACCESSIBILITY – Americans with Disabilities Act (ADA)

City facilities, as public buildings, shall be designed, constructed, and altered for accessibility and use by the disabled. In this connection, with the ADA, the Department of Justice 2010 ADA Standards for Accessible Design, (ADAAG) for Title II entities shall determine the criteria to be used for the design of these facilities to ensure accessibility and compliance.

A PDF Format copy can be downloaded from the DOJ site at:
http://www.ada.gov/regs2010/2010ADAStandards/2010ADAStandards_prt.pdf

The specific design criteria applicable to provisions for the disabled shall be incorporated in the Architectural Design Program document for the facility.

The DOJ standards stipulate minimums and maximums as guidelines. The City of Tucson uses these guidelines as the minimum or maximum allowable standards within which we prefer to provide the most comfortable design to provide universal access.

DSD shall be consulted early, and as the project proceeds, to specifically review ADA issues/requirements.

TABLE OF CONTENTS

I. SECTION 020000 EXISTING CONDITIONS – GENERAL ASSESSMENT CRITERIA

II. SECTION 022000 COMMISSIONING OF EXISTING BUILDINGS

III. SECTION 024000 DEMOLITION

IV. SECTION 024050 ARC FLASH GUIDELINES

I. SECTION 020000 EXISTING CONDITIONS – GENERAL ASSESSMENT CRITERIA

This document sets forth the assessment criteria to be used for the site development design for the facility.

The site development design description of the project site shall review all the existing conditions listed in this section, whether the site is undeveloped land, developed land with no existing structure, land with existing structure(s), renovation of land and structure(s), renovation of structure, tenant improvement to an undeveloped space in a structure or remodel of an existing space in a structure.

The project site shall have an assessment of the existing conditions, consisting of one or more of the following (see Division 32, Section 3200015 for further information):

a. Site Survey
b. Record drawings (as-builts)
c. Movement and vibration assessment

d. Acoustic Assessment
e. ADA Accessibility Assessment
f. Natural Environment Assessment
    1. Air
    2. Water
    3. Land
g. Chemical Sampling and Analysis of Soils
h. Existing material Assessment
    1. Concrete
    2. Masonry
    3. Metals
    4. Wood, Plastics, and Composites
    5. Waterproofing
    6. Roofing
i. Hazardous Materials Assessment
    1. Asbestos
    2. Lead
    3. Polychlorinate Biphenyl (PCB)
    4. Biological (Mold)
    5. Hazardous Waste
j. Geotechnical Investigations
    1. Subsurface Drilling and Sampling
    2. Material Testing
    3. Exploratory Investigations
    4. Geotechnical Monitoring Before Construction (Groundwater Monitoring)
k. Arc Flash Assessments (See section 024050 Arc Flash Guidelines below)

II. SECTION 022000 COMMISSIONING OF EXISTING BUILDINGS

COMMISSIONING OF EXISTING BUILDINGS - Newly acquired buildings by the City of Tucson for immediate use with no remodeling or renovations, shall have all electrical and mechanical systems commissioned prior to City of Tucson employee move-in.

III. SECTION 024000 DEMOLITION

DEMOLITION & STRUCTURE RAZING - Demolition shall consist of selective site demolition (paving, utilities, etc.), structure demolition (buildings), selective structure demolition, and selective historic demolition.

DEMOLITION PERMIT – A demolition permit from Pima County must be obtained by the demolition contractor prior to demolition involving building structural elements, visible dust and emissions from hazardous materials (Asbestos, Lead, PCB's, Mold, and/or Hazardous Waste).

REMOVAL AND SALVAGE OF CONSTRUCTION MATERIALS – The Project Manager will specify materials to be removed and salvaged for re-use by the City. Historic construction materials removed and stored for re-use shall be photographed, numbered and cataloged for correct sequence of re-installation.

CONTAMINATED SITE MATERIAL REMOVAL – The contractor shall obtain or hire a subcontractor with proper A.H.E.R.A. accreditation training for his foremen/supervisors and workers and maintain annual refresher training as prescribed by E.P.A. under section 203 of Title 2 of the Toxic Substance Control Act. In addition, the contractor or subcontractor shall provide proper respirators and annual respirator fit testing for his foremen/supervisors and workers. The contractor or subcontractor shall provide all necessary documentation, transportation and manifests of proper disposal, hazard control equipment and protection to remove contaminated site materials.

Contaminated site materials consist of:

a. Asbestos
b. Contaminated Soils
c. Underground Storage Tanks (containing hazardous materials – as determined by the City of Tucson Fire Department)
d. Lead
e. Polychloride Biphenyl (PCB)
f. Mold
g. Hazardous Waste Drums

IV. SECTION 024050 ARC FLASH GUIDELINES

Provide Arc Flash assessments of all existing, newly acquired and new buildings. Refer to the following web site:
http://www.electricalpowerengineering.com/common/documents/avoservices/arc_flash_study_specs.pdf

Irrigation Design Standards
City of Tucson Parks and Recreation

CITY OF TUCSON

11/05

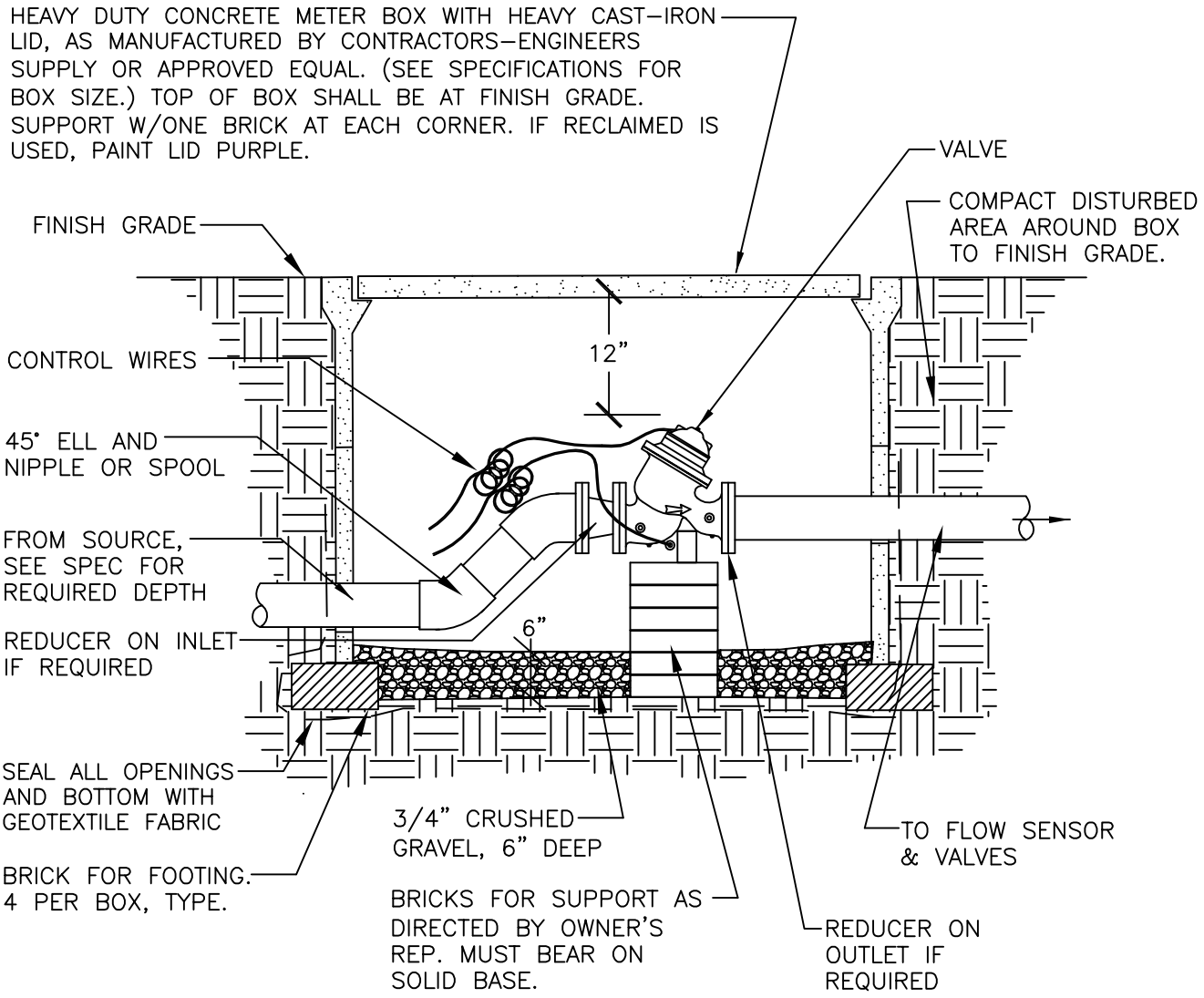

1 MASTER VALVE

SCALE: N.T.S.

NOTES:
1. SEE PLAN & SPECIFICATIONS FOR OPTIONS REQUIRED ON VALVE APPLICATIONS (SUCH AS, N.O./N.C./PRESS. REG., LOW WATT SOLENOIDS)
2. FOR VALVES 3" AND LARGER USE FLANGED MASTER VALVE IRON FITTINGS INCLUDING 45° ELLS AND REDUCERS. FOR VALVES 2 1/2" AND SMALLER USE THREADED MASTER VALVE AND SCH. 80 PVC FITTINGS. 45° ELLS TO BE SxS.

ISSUED:		STANDARD DETAIL		DETAIL NO.
	CITY OF TUCSON	LANDSCAPE IRRIGATION SYSTEM: MASTER VALVE		1
REVISED:				SHEET OF

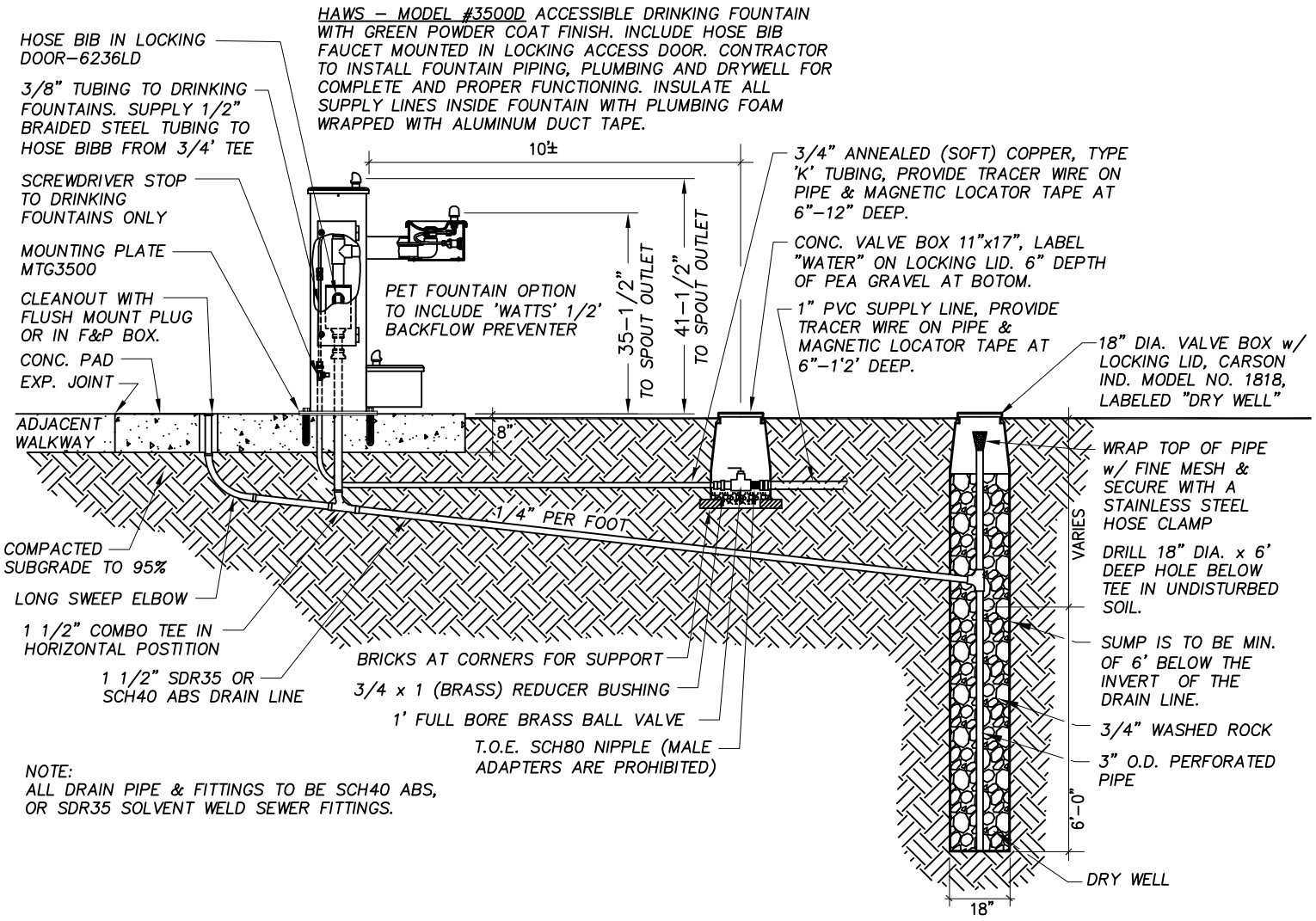

22

DRINKING FOUNTAIN (ADA COMPLIANT)

SCALE: N.T.S.

(WITH OPTIONAL PET FOUNTAIN)

ISSUED:		STANDARD DETAIL		DETAIL NO.
	CITY OF TUCSON	LANDSCAPE IRRIGATION SYSTEM: DRINKING FOUNTAIN (ADA COMPLIANT)		2
REVISED: 12-02-08				SHEET OF

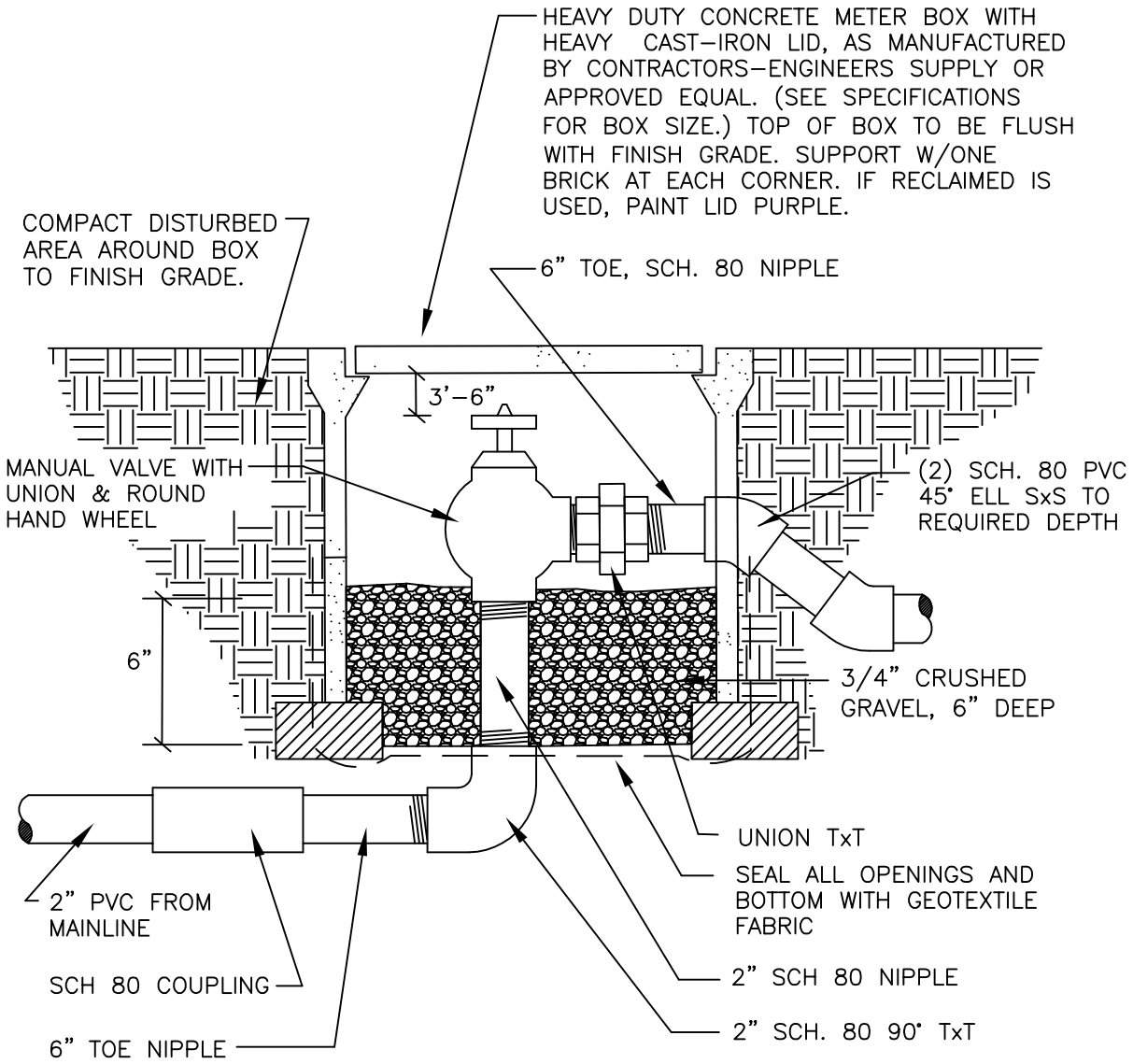

3 MANUAL VALVE FOR QUICK COUPLERS

SCALE: N.T.S.

ISSUED:		STANDARD DETAIL		DETAIL NO.
	CITY OF TUCSON	LANDSCAPE IRRIGATION SYSTEM: MANUAL VALVE FOR QUICK COUPLER		3
REVISED:				SHEET OF

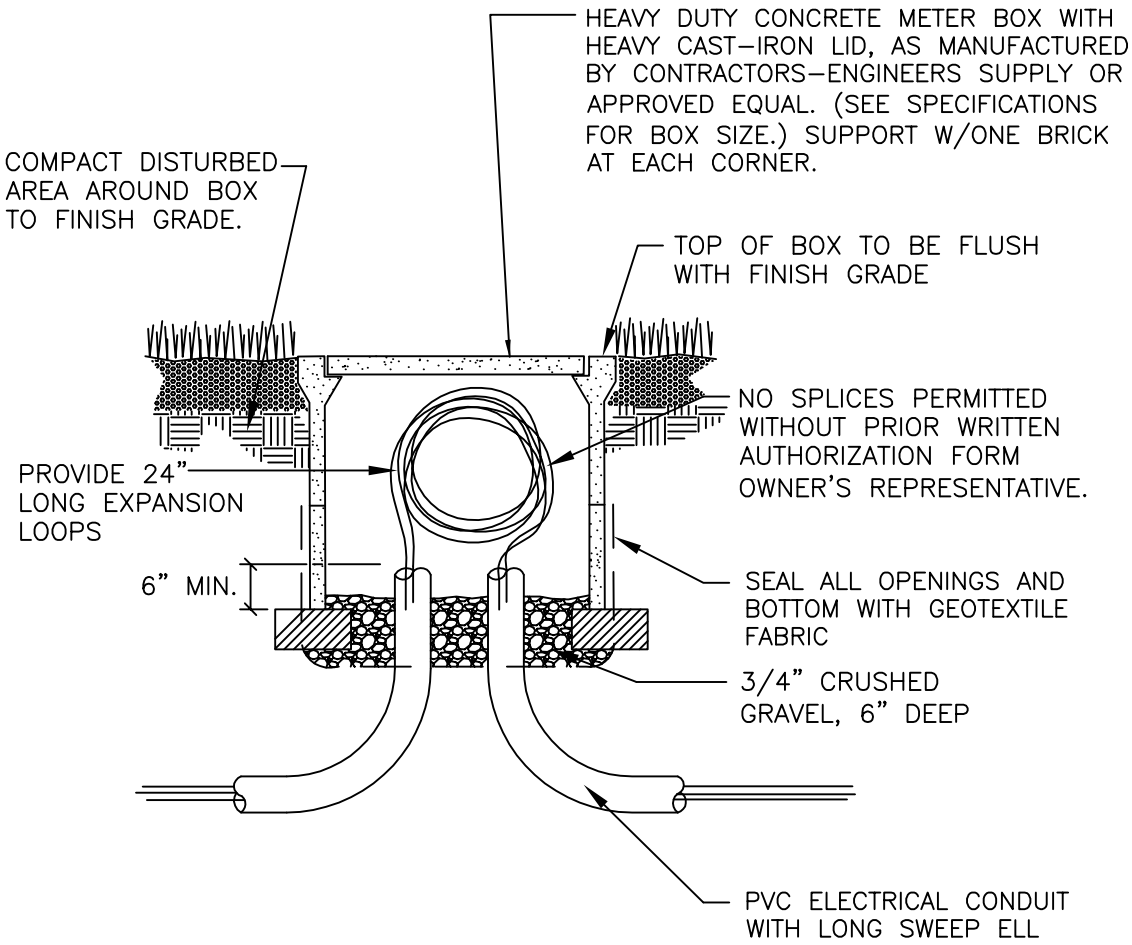

4

PULL BOX DETAIL (COMMUNICATION CABLE)

SCALE: N.T.S.

NOTE:
TO BE SPACED AT 250' MAX. OR AT EACH CHANGE OF DIRECTION TOTALING 90° OR MORE.

ISSUED:		STANDARD DETAIL		DETAIL NO.
		LANDSCAPE IRRIGATION SYSTEM: PULL BOX (COMMUNICATION CABLE)		4
REVISED:				SHEET OF

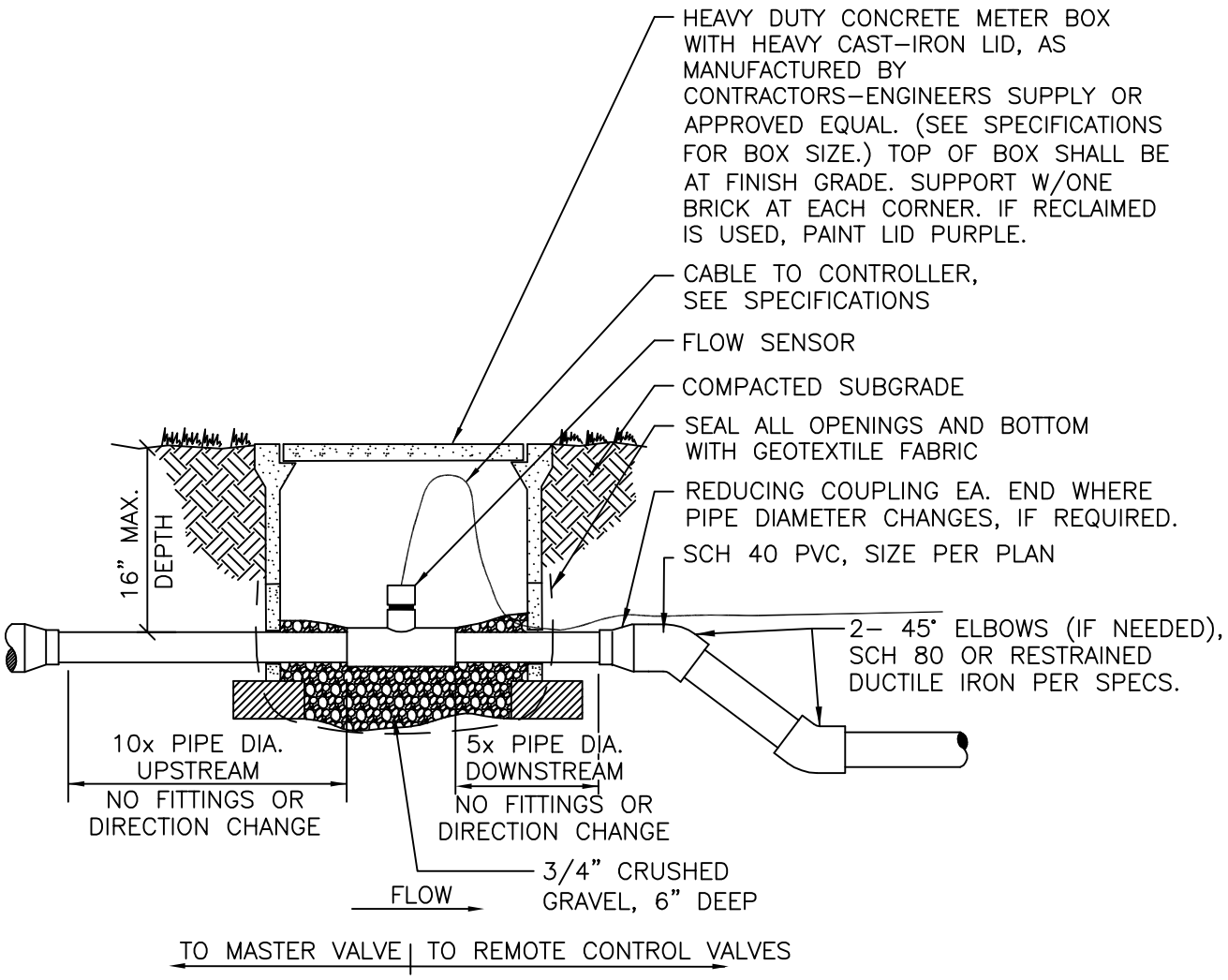

5 FLOW SENSOR

SCALE: N.T.S.

ISSUED:		STANDARD DETAIL		DETAIL NO.
		LANDSCAPE IRRIGATION SYSTEM: FLOW SENSOR		5
REVISED:				SHEET OF

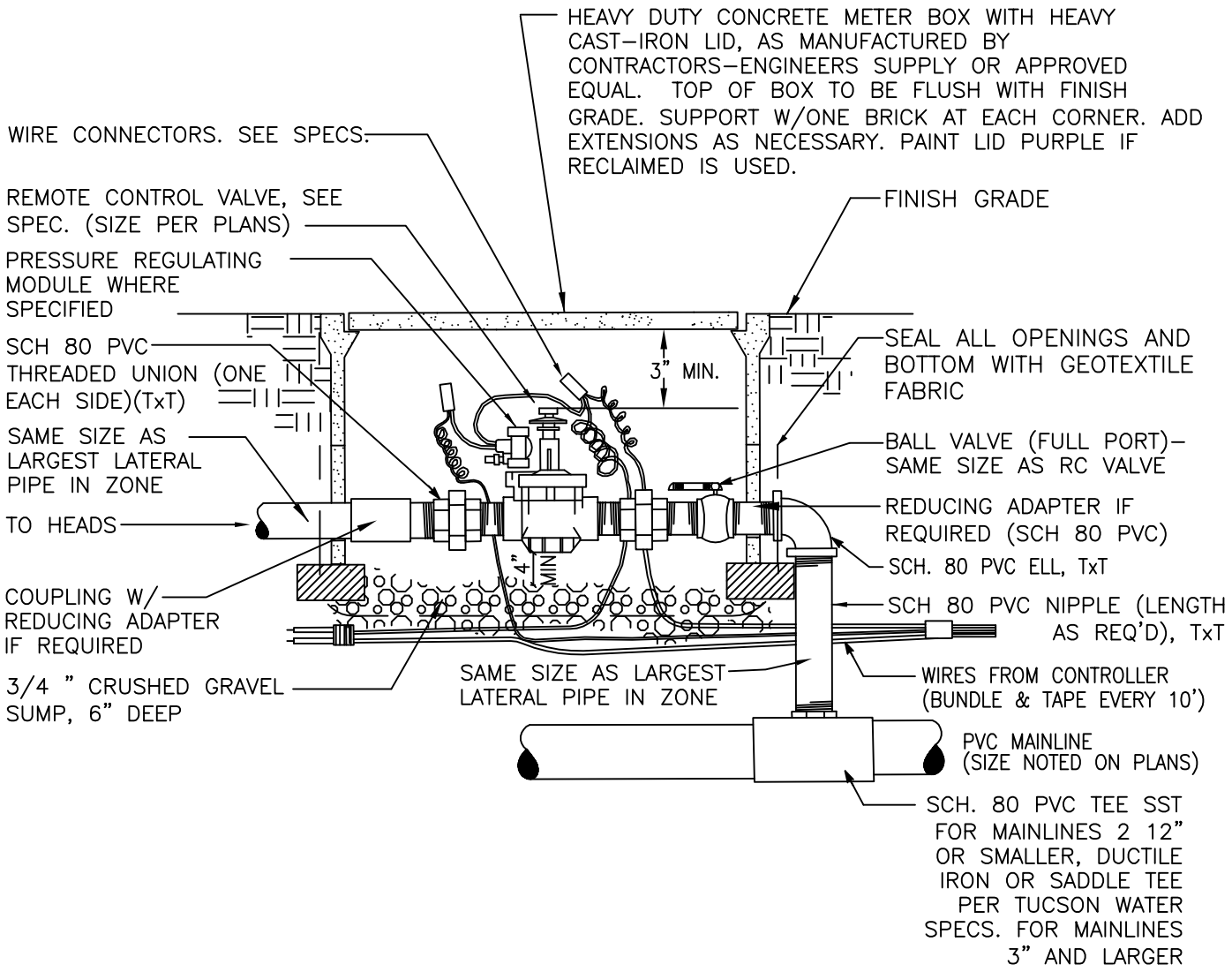

NOTES:
1. ALL WIRE TO BE INSTALLED & SUPPLIED PER LOCAL CODE.
2. PROVIDE EXPANSION COIL AT EACH CONNECTION IN VALVE BOX (COIL WIRE AROUND $\frac{1}{2}$" PIPE 10 TIMES).
3. DIAMETER OF FITTINGS LEADING TO AND FROM VALVE SHALL EQUAL CONTROL VALVE DIAMETER.

6 REMOTE CONTROL VALVE ASSEMBLY

SCALE: N.T.S.

ISSUED:		STANDARD DETAIL		DETAIL NO.
	CITY OF TUCSON	LANDSCAPE IRRIGATION SYSTEM: REMOTE CONTROL VALVE ASSEMBLY		6
REVISED:				SHEET OF

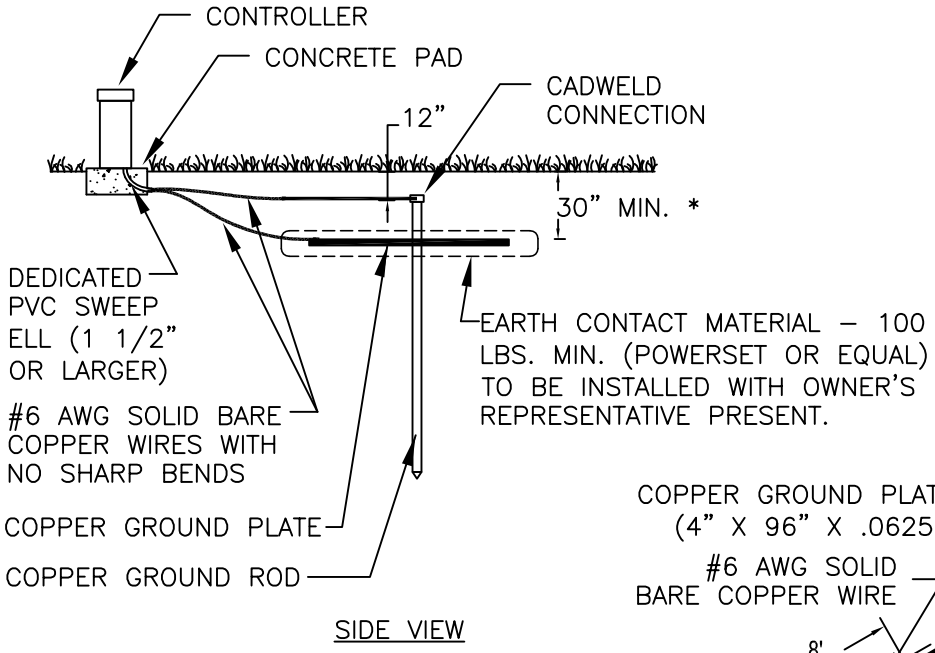

SIDE VIEW

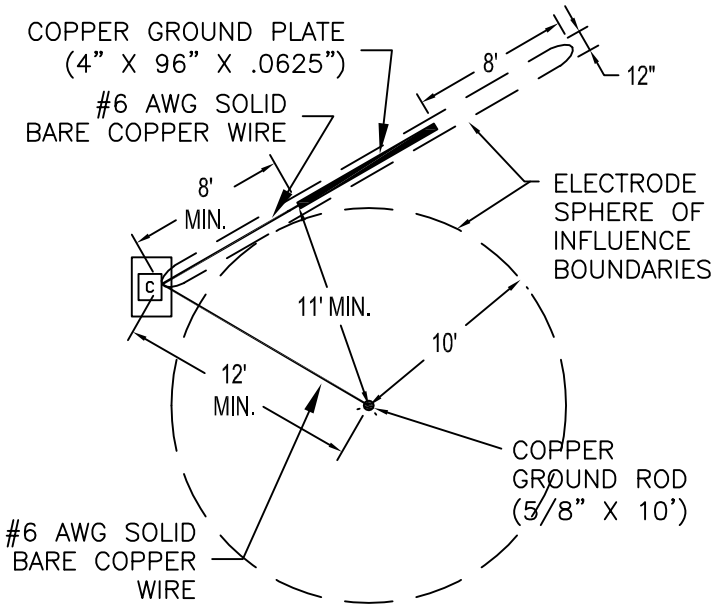

DO NOT INSTALL ANY OTHER WIRES OR CABLE WITHIN THE SPHERE OF INFLUENCE

TOP VIEW

7

CONTROLLER GROUNDING DETAIL

SCALE: N.T.S.

ISSUED:		STANDARD DETAIL		DETAIL NO.
	CITY OF TUCSON	LANDSCAPE IRRIGATION SYSTEM: CONTROLLER GROUNDING		7
REVISED:				SHEET OF

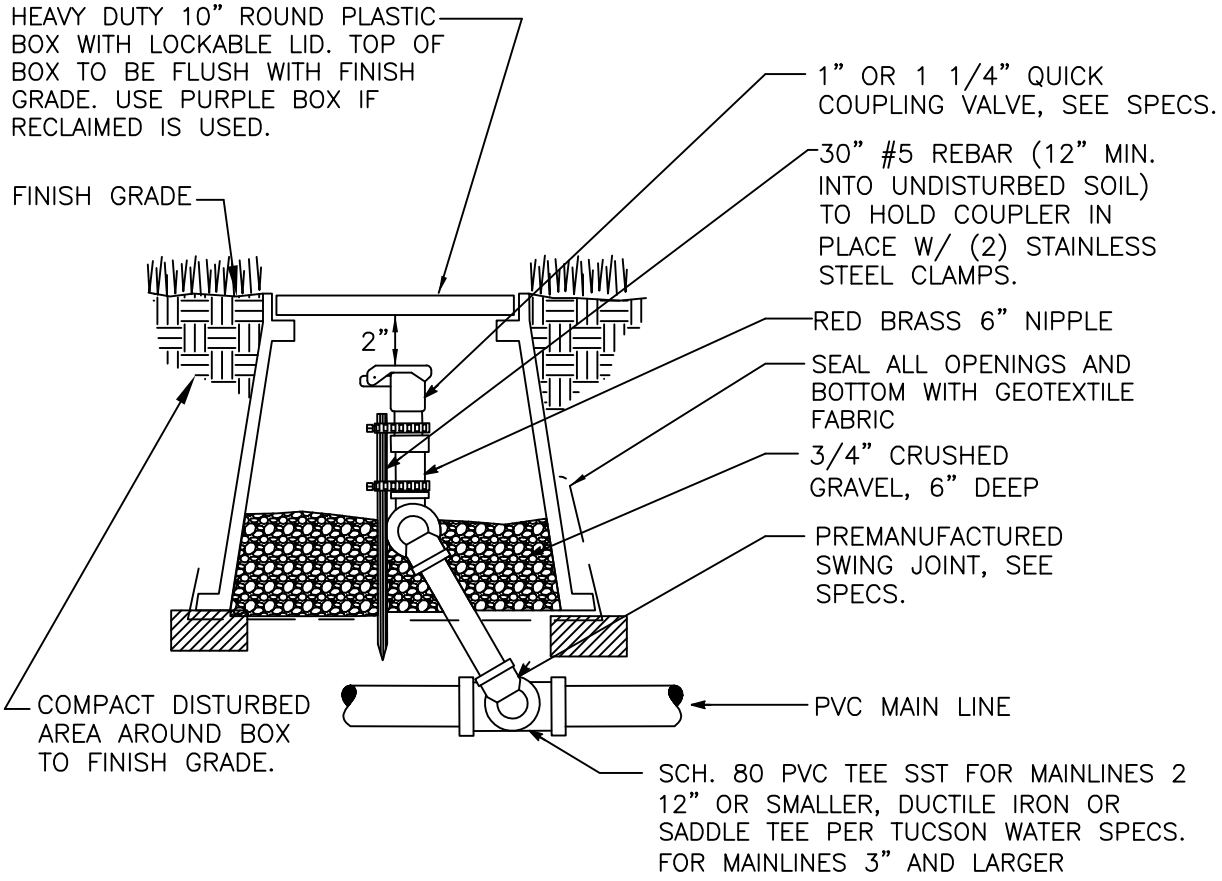

8 QUICK COUPLER ASSEMBLY

SCALE: N.T.S.

ISSUED:		STANDARD DETAIL		DETAIL NO.
	CITY OF TUCSON	LANDSCAPE IRRIGATION SYSTEM: QUICK COUPLER ASSEMBLY		8
REVISED:				SHEET OF

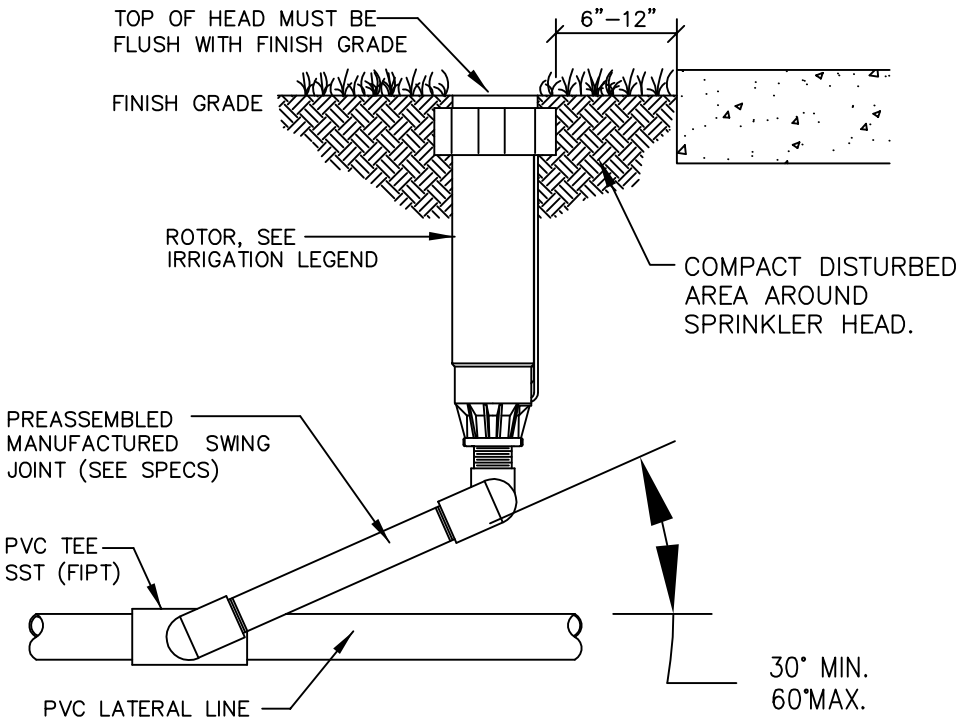

9 ROTOR SPRINKLER HEAD

SCALE: N.T.S.

ISSUED:		STANDARD DETAIL		DETAIL NO.
		LANDSCAPE IRRIGATION SYSTEM: ROTOR SPRIKLER HEAD		9
REVISED:				SHEET OF

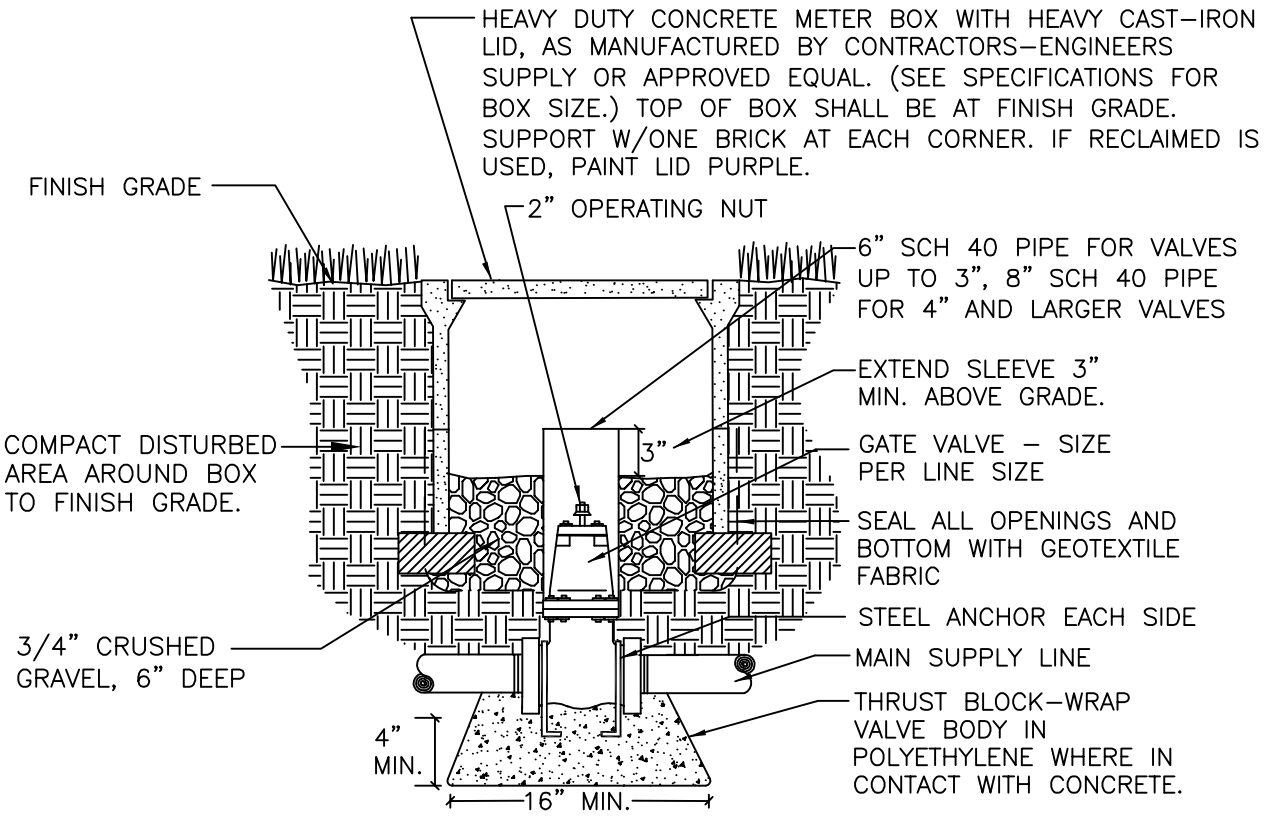

NOTE: COMPACT SOIL AROUND VALVE PIT ASSEMBLY TO SAME DENSITY AS UNDISTURBED ADJACENT SOIL. KEY CONCRETE 6" MIN. INTO UNDISTURBED SIDE WALL OF TRENCH.

10 GATE VALVE (MAINLINE 2 1/2" AND LARGER)

SCALE: N.T.S.

ISSUED:		STANDARD DETAIL		DETAIL NO.
	CITY OF TUCSON	LANDSCAPE IRRIGATION SYSTEM: GATE VALVE (2 1/2" AND LARGER)		10
REVISED:				SHEET OF

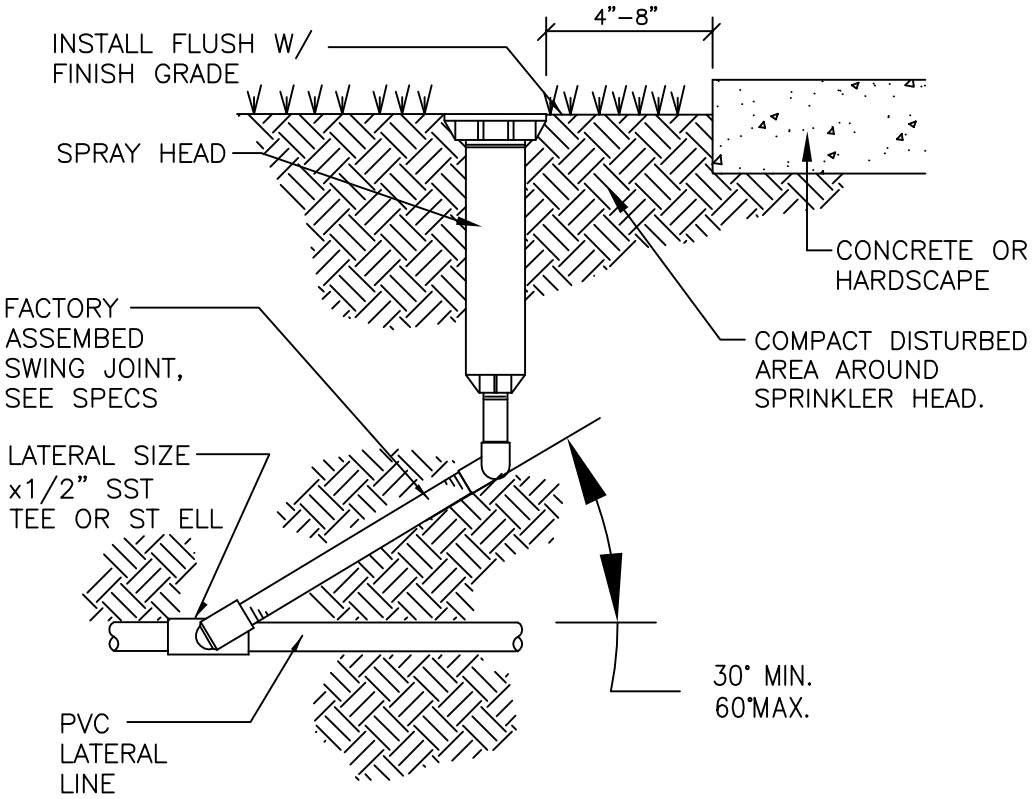

11 POP–UP HEAD DETAIL

SCALE: N.T.S.

ISSUED:		STANDARD DETAIL		DETAIL NO.
		LANDSCAPE IRRIGATION SYSTEM: POP-UP HEAD DETAIL		11
REVISED:				SHEET OF

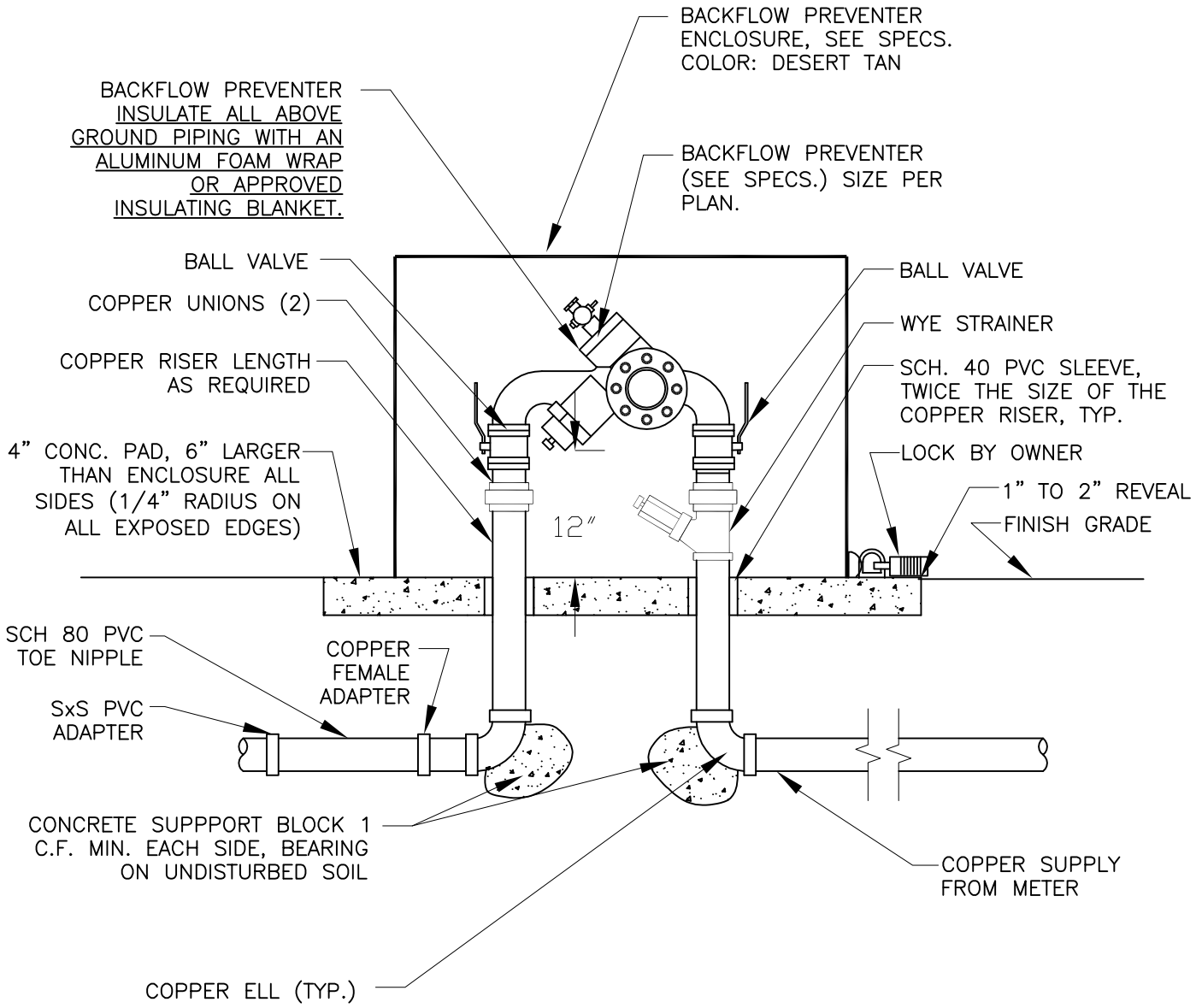

12 REDUCED PRESSURE BACKFLOW PREVENTER DETAIL

SCALE: N.T.S. (2" SIZE AND LESS)

NOTE:
PROTECT COPPER FROM CONCRETE WITH PLUMBERS TAPE (10 MIL. MIN.) OR PLASTIC SLEEVING

ISSUED:		STANDARD DETAIL		DETAIL NO.
	CITY OF TUCSON	LANDSCAPE IRRIGATION SYSTEM: REDUCED PRESSSURE BACKFLOW PREVENTER		12
REVISED:				SHEET OF

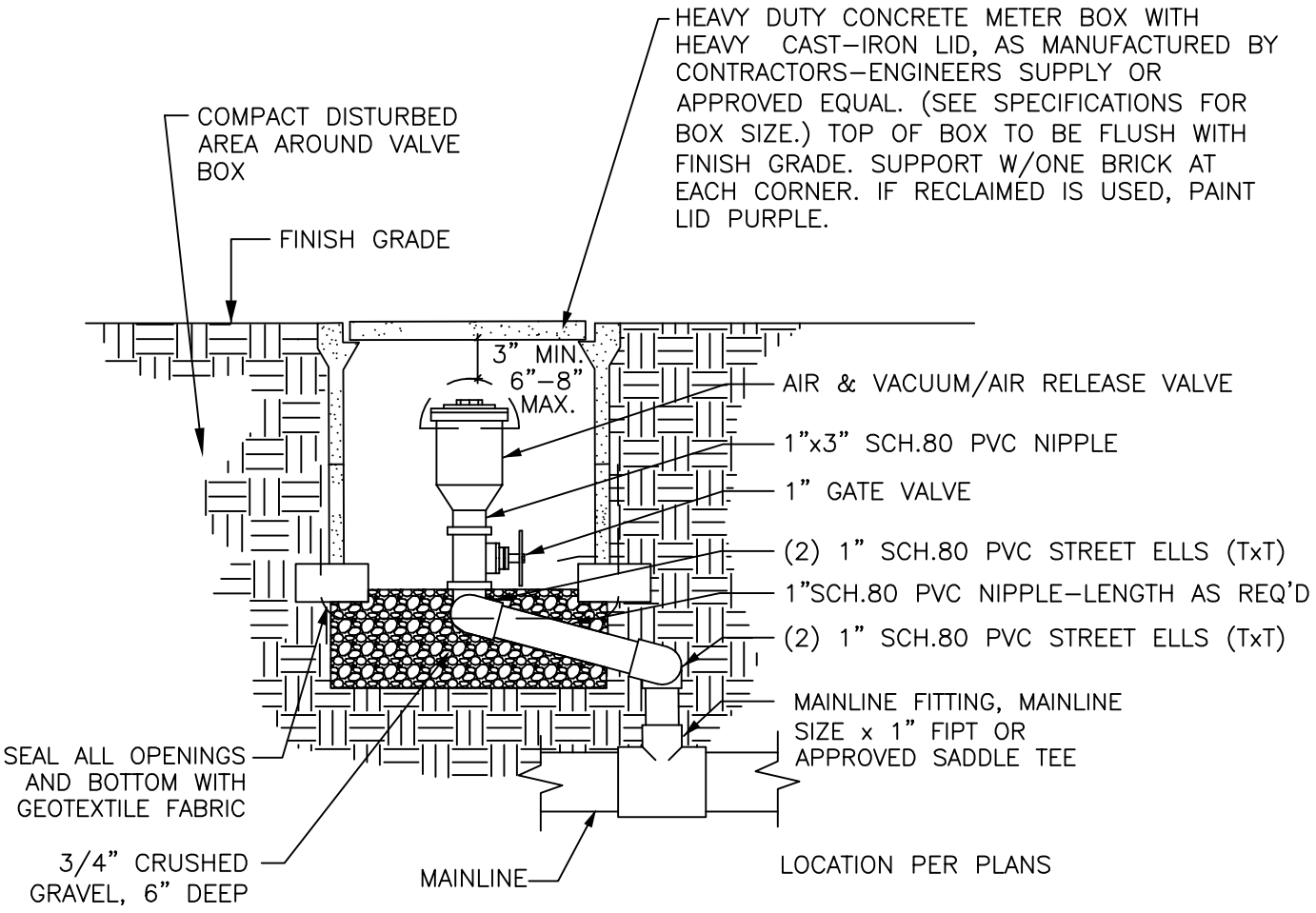

13 AIR VACUUM RELEASE VALVE

SCALE: N.T.S.

ISSUED:		STANDARD DETAIL		DETAIL NO.
	CITY OF TUCSON	LANDSCAPE IRRIGATION SYSTEM: AIR VACUUM RELEASE VALVE		13
REVISED:				SHEET OF

LEGEND
1. CONTROLLER ENCLOSURE.
2. PEDESTAL.
3. POURED CONCRETE BASE – 6" MIN. THICKNESS – EXTEND 6" BEYOND OUTSIDE DIMENSIONS OF ENCLOSURE WITH $\frac{1}{2}$% SLOPE FOR DRAINAGE.
4. 2" PVC LONG SWEEP ELL FOR CONTROL WIRES – USE ONE SWEEP ELL PER 18 STATIONS.
5. DIRECT BURIAL CONTROL WIRES TO CONTROL VALVES.
6. FINISH GRADE
7. CONTROLLER SUB–ASSEMBLY (CSA) INCLUDES GFI & TERMINAL STRIPS WITH PLACARDS.
8. AUTOMATIC CONTROLLER.
9. 120–VOLT DEDICATED SERVICE POWER SUPPLY IN CONDUIT ($\frac{3}{4}$" MIN.)
10. 1 1/2" PVC LONG SWEEP ELL FOR GROUNDING WIRE.
11. 1" PVC LONG SWEEP ELL FOR COMMUNICATION WIRE, UNLESS SPECIFIED OTHERWISE.

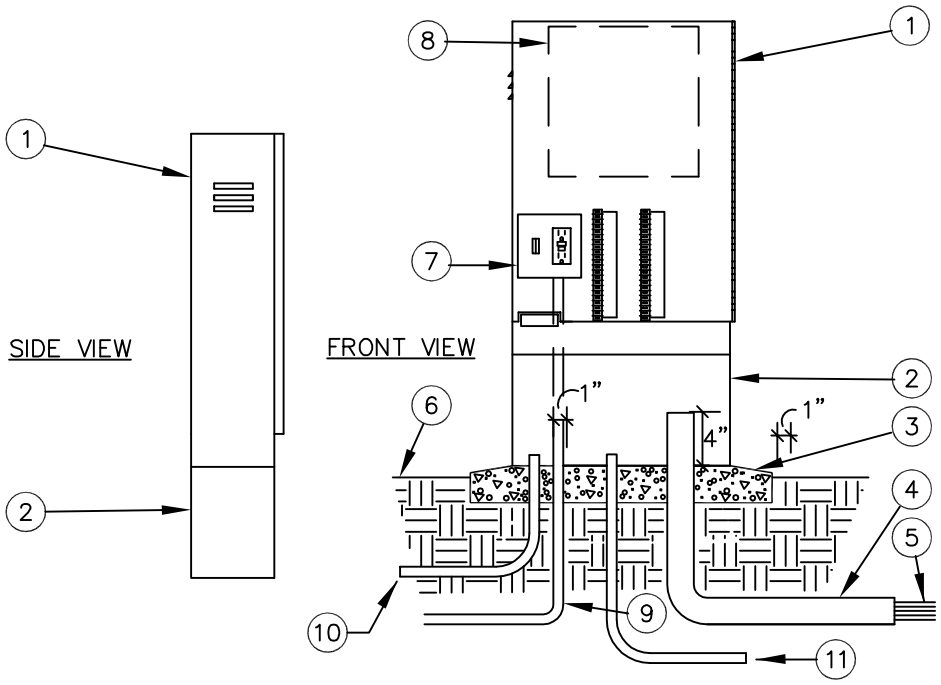

14 CONTROLLER ENCLOSURE

SCALE: N.T.S.

ISSUED:		STANDARD DETAIL		DETAIL NO.
	CITY OF TUCSON	LANDSCAPE IRRIGATION SYSTEM: CONTROLLER ENCLOSURE		14
REVISED:				SHEET OF

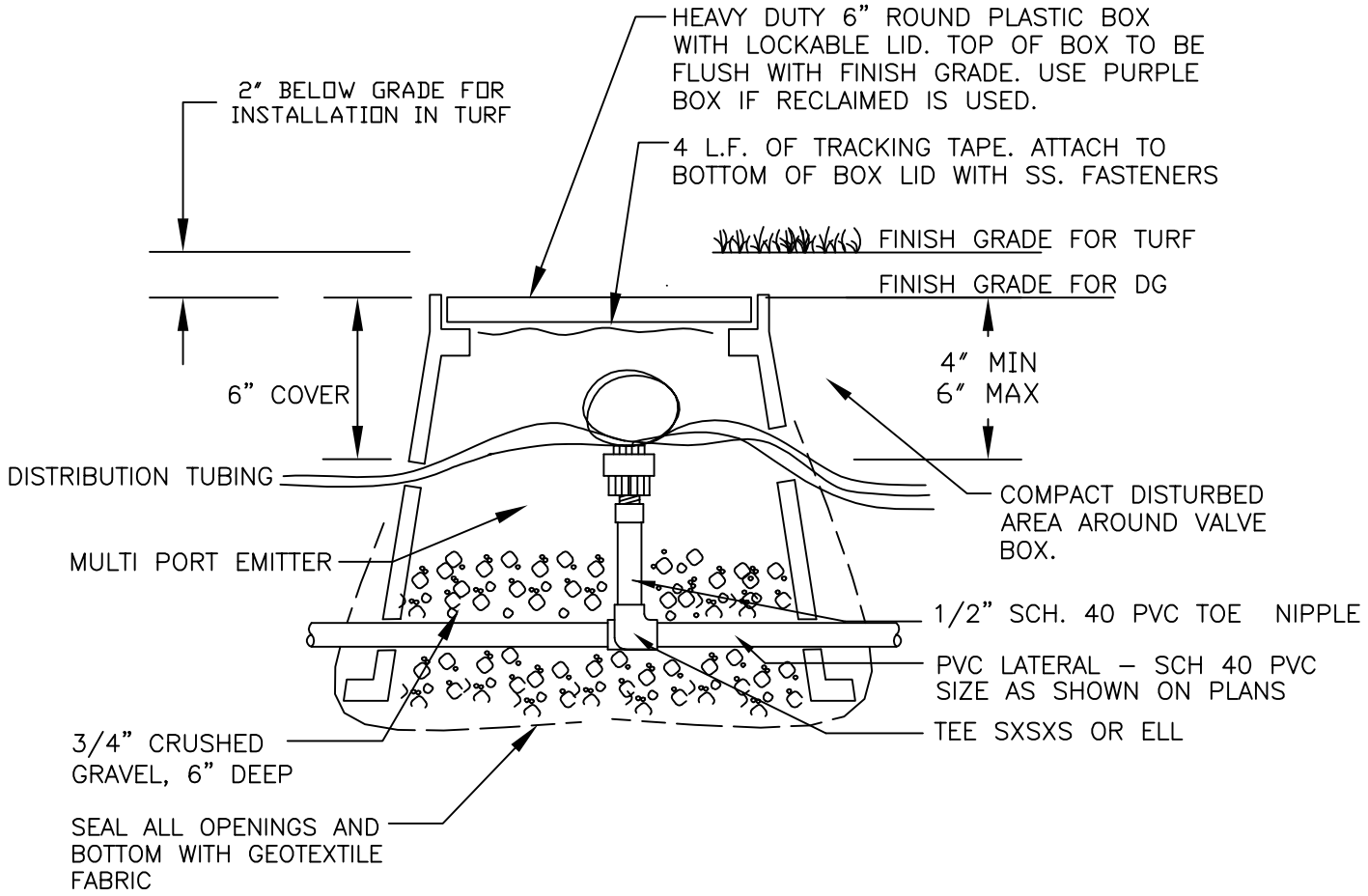

NOTES:
1. COIL DISTRIBUTION TUBING LOOSELY AROUND RISER ONE TIME BEFORE EXITING BOX
2. 1/2" PVC PIPING BETWEEN EMITTER AND EMITTER LATERAL IS NOT SHOWN ON PLAN. PROVIDE AS REQ'D. UP TO (6) EMITTERS MAY SHARE EACH 1/2" LATERAL EXTENSION.
3. INSTALL BOX 2" BELOW GRADE FOR INSTALLATION IN TURF
4. ALL PIPE TO BE SCH. 40 PVC

15 MULTI–OUTLET EMITTER ASSEMBLY

SCALE: N.T.S.

ISSUED:		STANDARD DETAIL		DETAIL NO.
	CITY OF TUCSON	LANDSCAPE IRRIGATION SYSTEM: MULTI-OUTLET EMITTER ASSEMBLY		15
REVISED:				SHEET OF

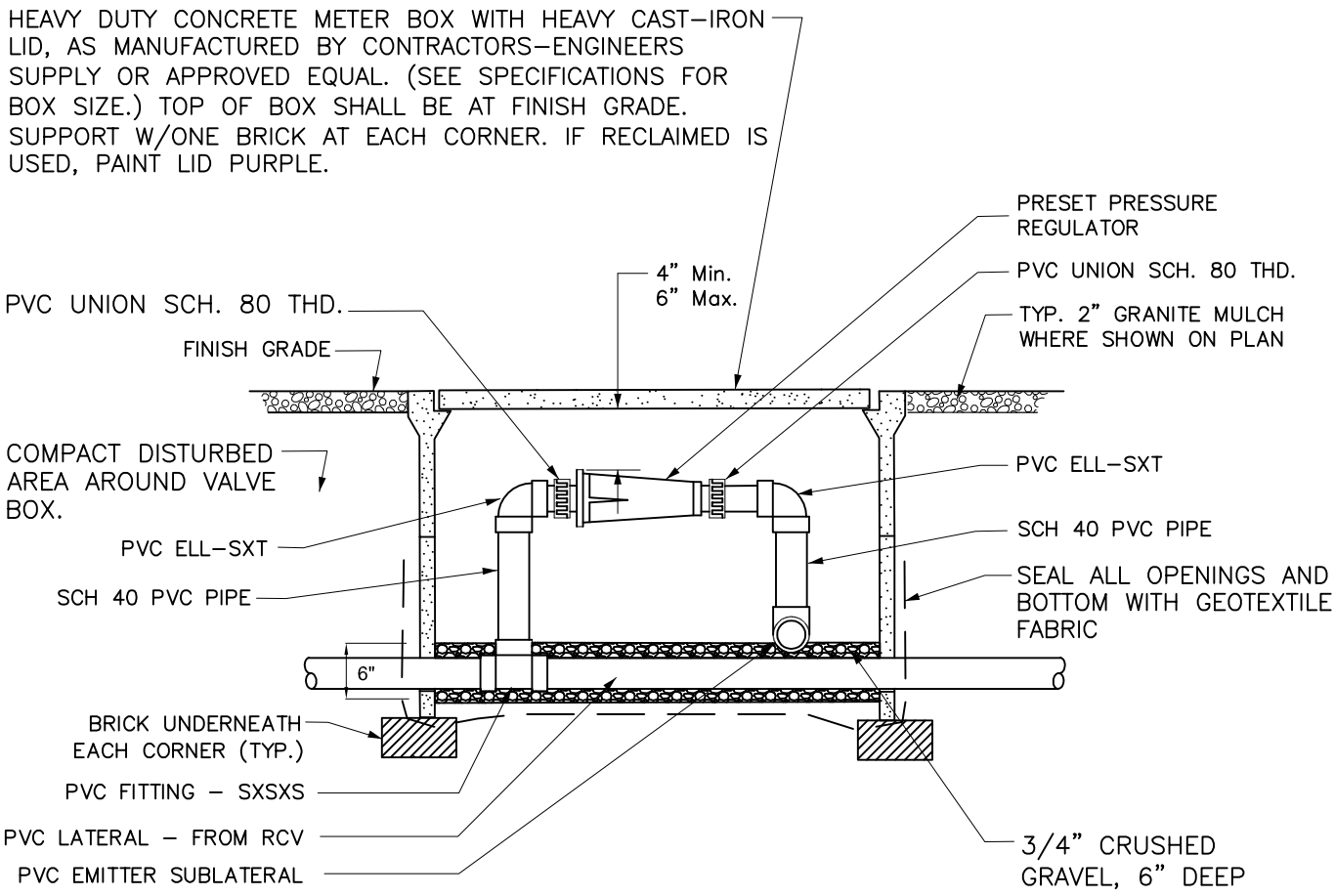

ALL PIPE SCH. 40 EXCEPT SCH. 80 UNIONS

16 PRESSURE REGULATOR RISER DETAIL

SCALE: N.T.S.

ISSUED:	CITY OF TUCSON	STANDARD DETAIL		DETAIL NO.
		LANDSCAPE IRRIGATION SYSTEM: PRESSURE REGULATOR RISER		16
REVISED:				SHEET OF

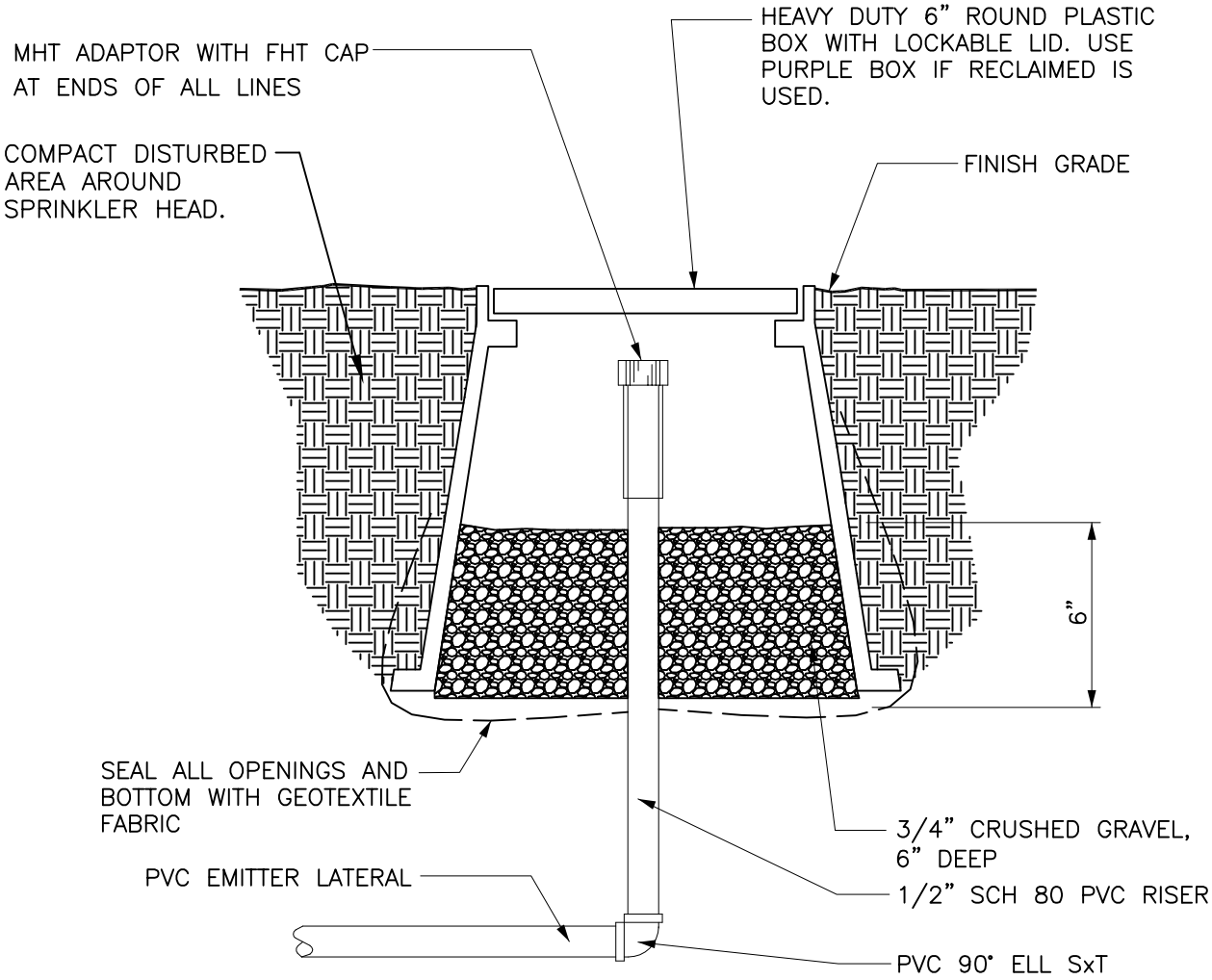

17 LATERAL END CAP

SCALE: N.T.S.

ISSUED:		STANDARD DETAIL		DETAIL NO.
	CITY OF TUCSON FOUNDED 1775	LANDSCAPE IRRIGATION SYSTEM: LATERAL END CAP		17
REVISED:				SHEET OF

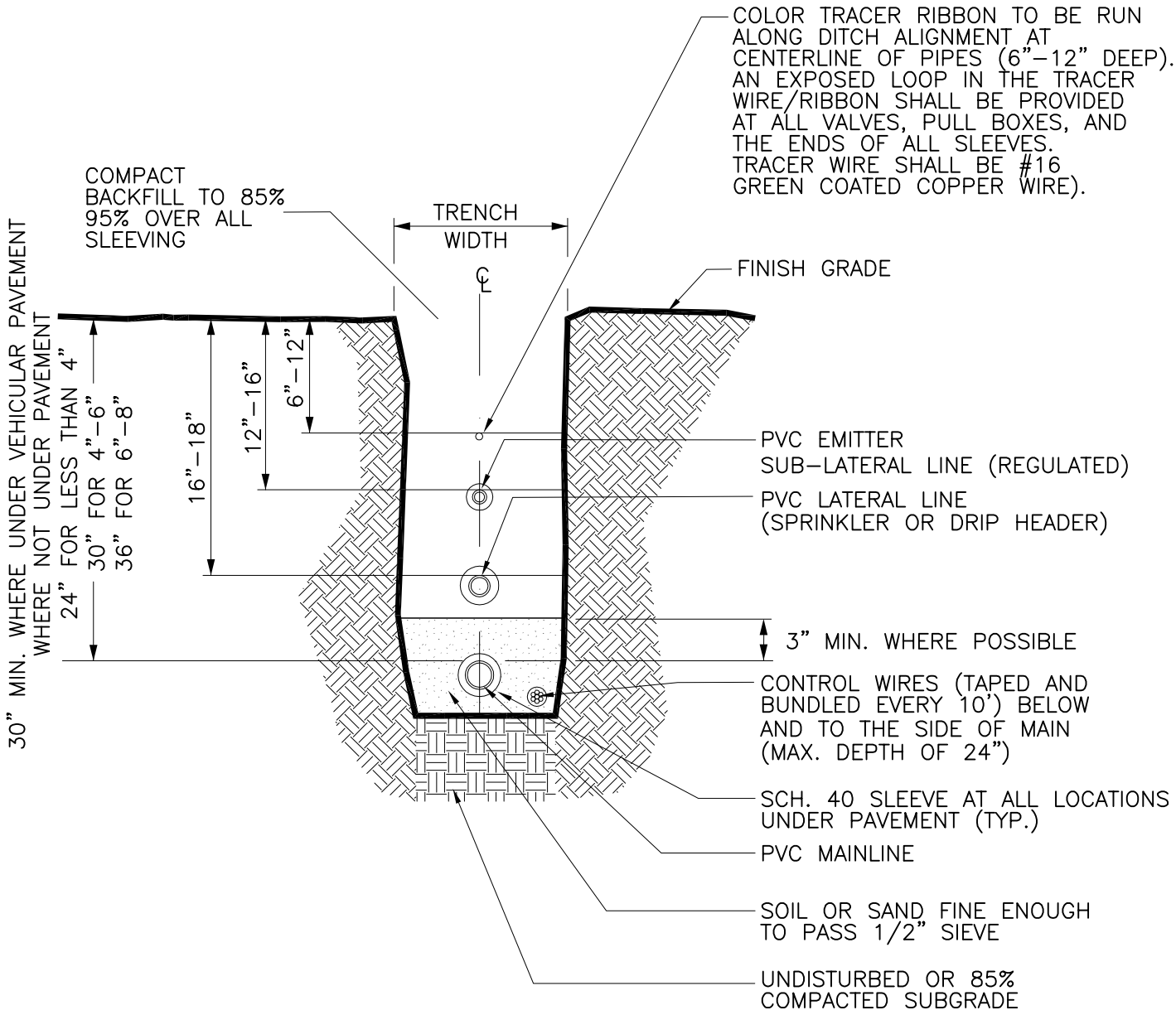

NOTES:

1. ALL PIPE SHALL BE INSTALLED IN ACCORDANCE WITH MANUFACTURER'S SPECIFICATIONS.
2. NO PIPE OR WIRE SHALL BE LOCATED UNDER PAVING UNLESS IT IS SLEEVED.

18 IRRIGATION TRENCHING

SCALE: N.T.S.

NOTE:
PROTECT COPPER FROM CONCRETE WITH PLUMBERS TAPE (10 MIL. MIN.) OR PLASTIC SLEEVING

ISSUED:		STANDARD DETAIL		DETAIL NO.
		LANDSCAPE IRRIGATION SYSTEM: IRRIGATION TRENCHING		18
REVISED:				SHEET OF

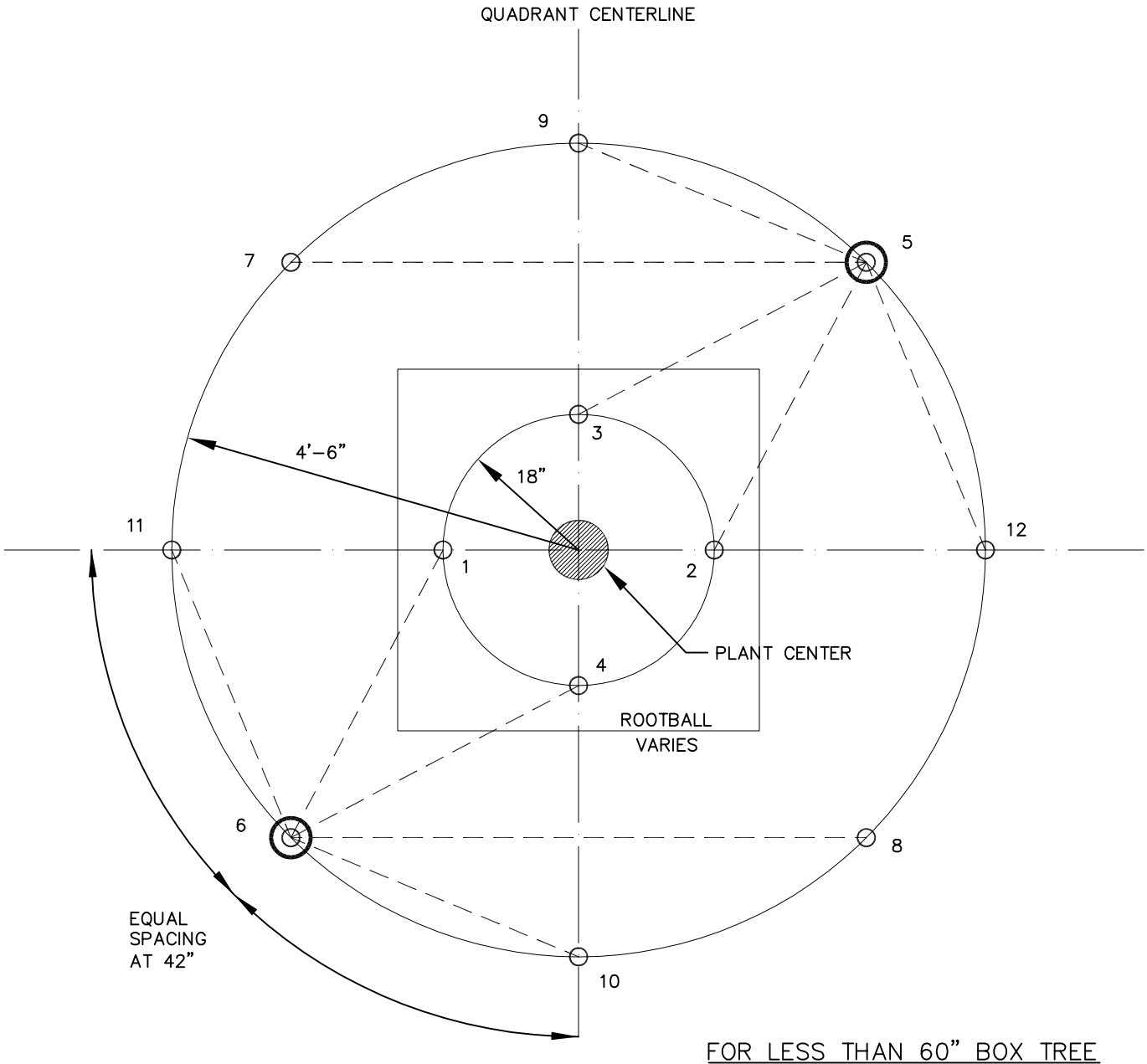

FOR LESS THAN 60" BOX TREE

NOTES:
1. MAXIMUM LENGTH OF ONE DISTRIBUTION TUBE SHALL BE 15'.
2. EMISSION POINTS ARE NUMBERED IN ORDER OF PLACEMENT (1–6).
3. IF ONLY ONE EMITER IS USED, PLACE UPHILL OF TREE IF ON SLOPE

MULTI–OUTLET EMITTER (AND EMISSION POINT)

EMISSION POINT

¼" DISTRIBUTION TUBING

19 EMITTER LOCATION DETAIL–TREES

SCALE: N.T.S.

ISSUED:		STANDARD DETAIL		DETAIL NO.
	CITY OF TUCSON	LANDSCAPE IRRIGATION SYSTEM: EMITTER LOCATION TREES - LARGE		19a
REVISED:				SHEET OF

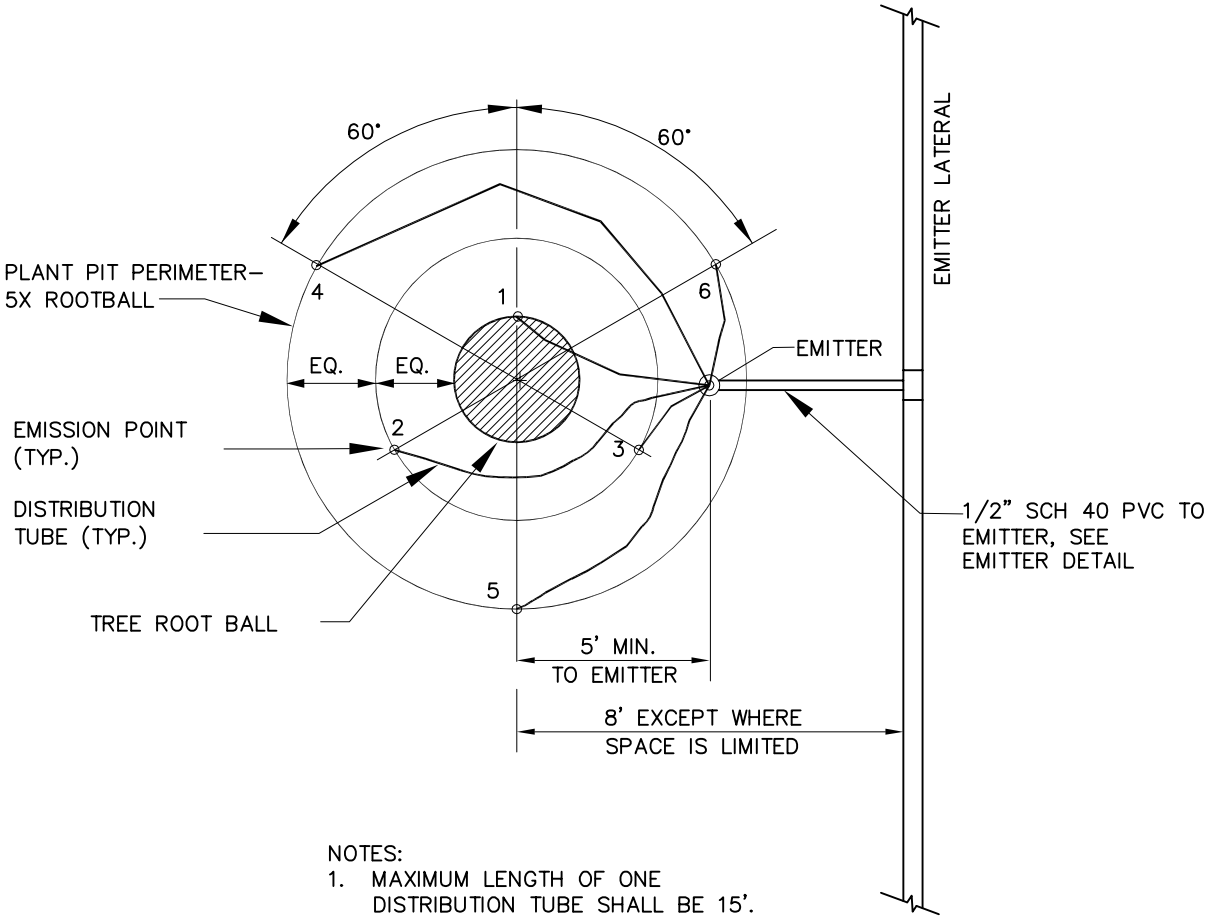

NOTES:

1. MAXIMUM LENGTH OF ONE DISTRIBUTION TUBE SHALL BE 15'.
2. EMISSION POINTS ARE NUMBERED IN ORDER OF PLACEMENT (1–6).
3. IF ONLY ONE EMITER IS USED, PLACE UPHILL OF TREE IF ON SLOPE

19 EMITTER LOCATION DETAIL–TREES

SCALE: N.T.S.

ISSUED:		STANDARD DETAIL		DETAIL NO.
		LANDSCAPE IRRIGATION SYSTEM: EMITTER LOCATION TREES		19
REVISED:				SHEET OF

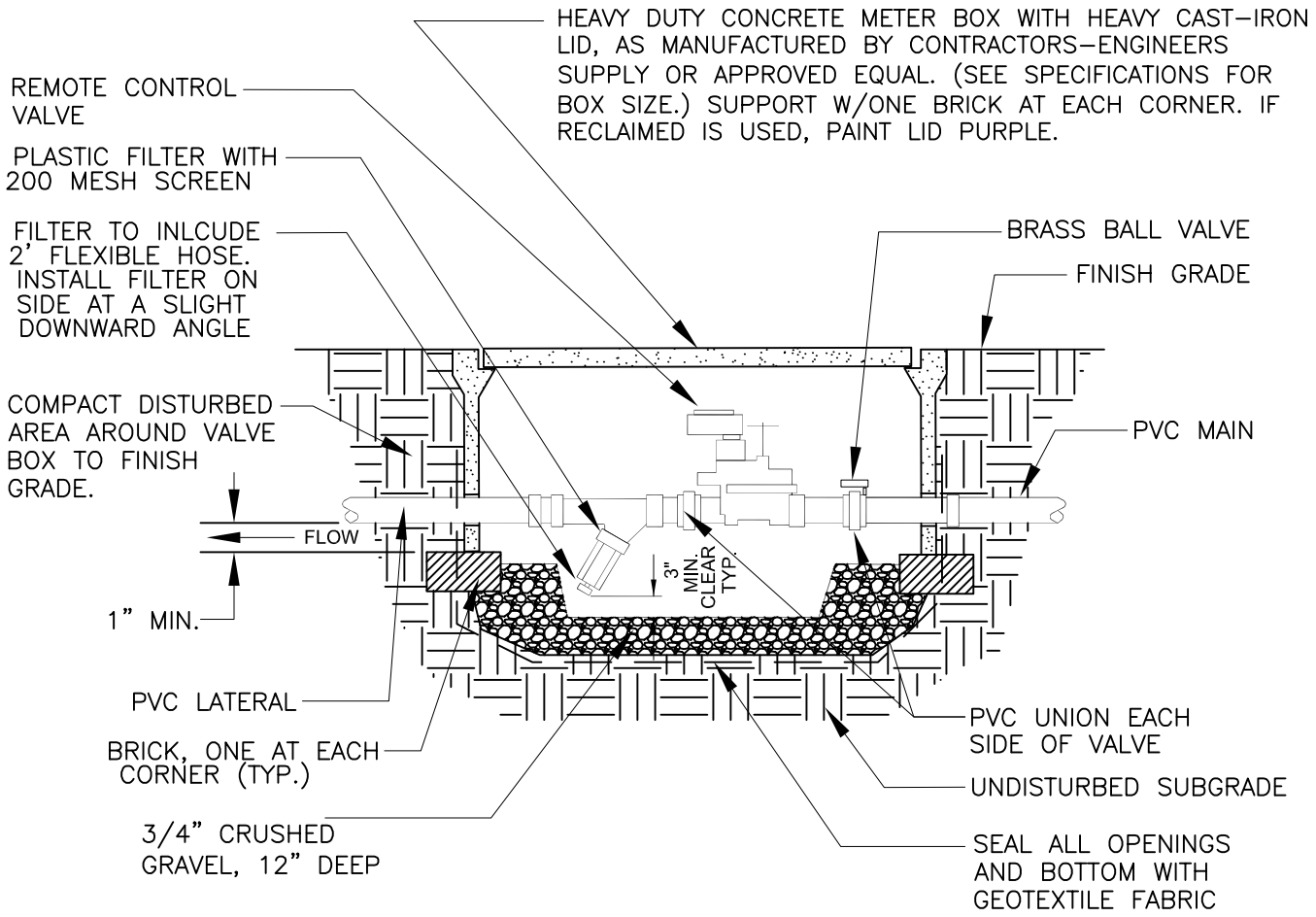

20 REMOTE CONTROL VALVE AND FILTER ASSEMBLY

SCALE: N.T.S.

ISSUED:		STANDARD DETAIL		DETAIL NO.
	CITY OF TUCSON	LANDSCAPE IRRIGATION SYSTEM: REMOTE CONTROL VALVE AND FILTER ASSEMBLY		20
REVISED:				SHEET OF

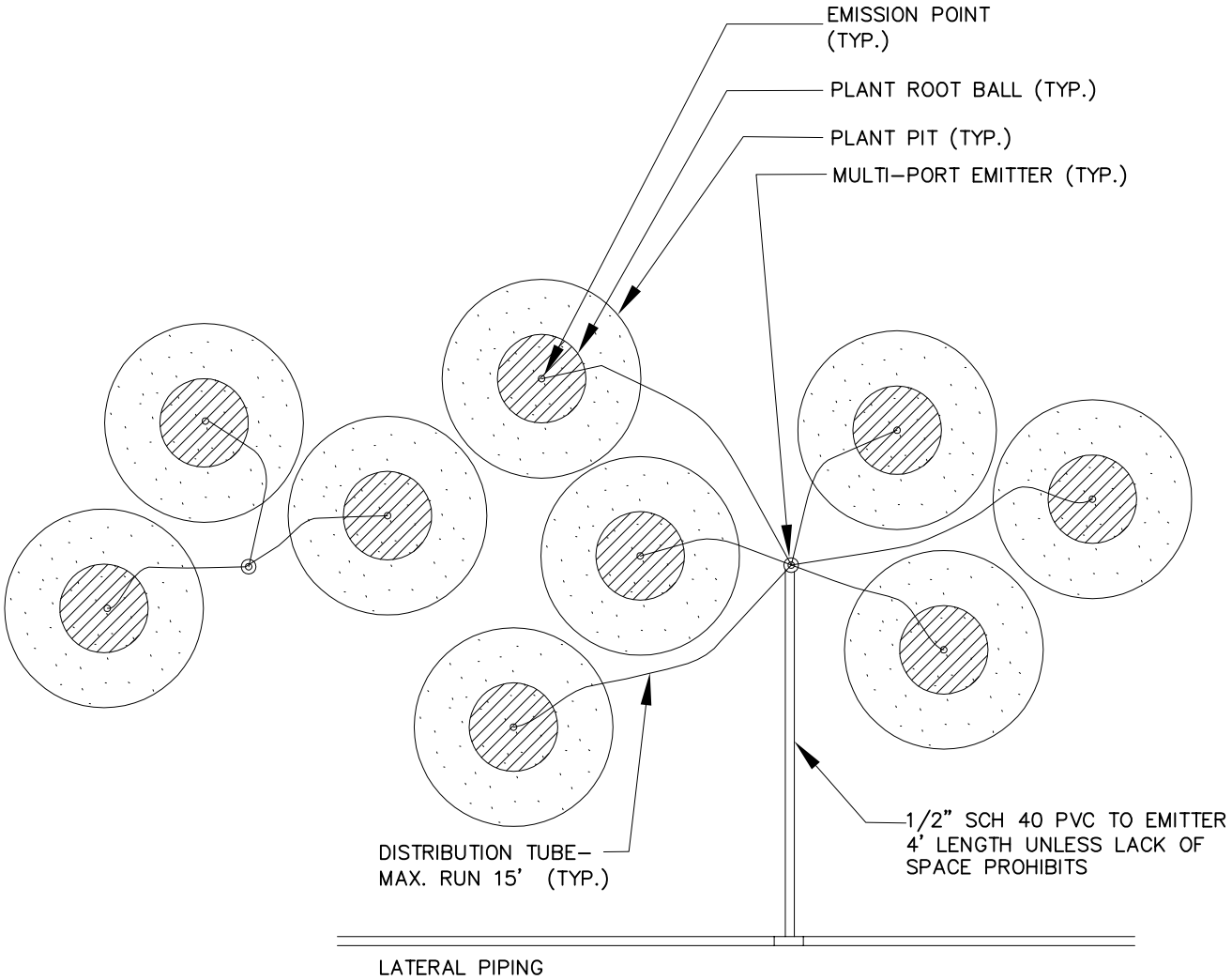

NOTES:

1. MORE THAN ONE SHRUB MAY BE WATERED FROM A SINGLE MULTI–PORT EMITTER.
2. MAXIMUM LENGTH OF ONE DISTRIBUTION TUBE SHALL BE 15'.
3. IF ONLY ONE DISTRIBUTION TUBE PER PLANT IS REQUIRED, PLACE EMISSION POINT ON TOP OF ROOT BALL OR UPHILL OF PLANT.
4. IF MORE THAN ONE DISTRIBUTION TUBE PER SHRUB IS REQUIRED, SPACE EMISSION POINTS EVENLY WITHIN PLANT PIT.

21 EMITTER LOCATION DETAIL–SHRUBS

SCALE: N.T.S.

ISSUED:		STANDARD DETAIL		DETAIL NO.
	CITY OF TUCSON	LANDSCAPE IRRIGATION SYSTEM: EMITTER LOCATION SHRUBS		21
REVISED:				SHEET OF

TABLE OF CONTENTS

I. SECTION 030000 CAST-IN-PLACE CONCRETE - GENERAL

II. SECTION 033000 SLABS ON GRADE

III. SECTION 033050 MISCELLANEOUS CAST-IN-PLACE CONCRETE RAMPS FOR ADA

I. SECTION 030000 CAST-IN-PLACE CONCRETE - GENERAL:

Consider replacing a percentage of the cement in a project's concrete with fly ash to qualify for a LEED point under the "Innovative Design" category. Additional curing time (or the use of an accelerator) may also be required. Ask the concrete supplier to provide the parameters for the LEED point with their proposed mix designs.

Cracks, sparkling rust and honeycombing in finished concrete exposed to view are not acceptable.

Slope concrete floors to floor drain(s) or exterior door on all laundry rooms and water heater rooms.

Check for sufficient control joints in flat work.

Architectural concrete requires special consideration. The specifications shall address:

1. Mix/tolerances
2. Mixing
3. Temperatures
4. Form work
5. Protection
6. Curing
7. Maintenance
8. Testing recommendations.

All curing, sealing and hardening agents must be compatible with each other and the final finish requirements. Each agent shall be specified separately from the curing agent.

II. SECTION 033000 SLABS ON GRADE:

Minimum strength of concrete for slabs on grade shall be 3,000 psi in 28 days.

All interior slabs on grade shall be reinforced with reinforcing bars. Wire fabric mesh is **not** acceptable. Unless specific conditions such as architectural appearance specify otherwise, the cracks in slabs on grade exceeding the width of 0.03 inch (credit card is 0.03" thick) are **not** acceptable and shall be removed and replaced. "Curled" concrete with an 8' straight edge elevation difference of 1/4" shall be removed and replaced. Adjacent slabs with a settlement difference of more than 1/8", one of the slabs shall be removed and replaced.

Exterior and pavement slabs can be reinforced with W1.9 x W1.9 x 6 x 6 WWF or fiber-mesh concrete reinforcing fiber. Unless specific conditions such as architectural appearance specify otherwise, the cracks in slabs on grade exceeding the width of 0.03 inch (credit card is 0.03" thick) are **not** acceptable and shall be removed and replaced. "Curled" concrete with an 8' straight edge elevation difference of 3/8" shall be removed and replaced. Adjacent slabs with a settlement difference of more than 1/4", one of the slabs shall be removed and replaced.

On an individual project basis, the City project manager, may consider accepting a credit for under strength concrete, "curled" slabs or uneven settlement, in lieu of removal and replacement. Depending upon the specific location and usage of concrete, and varying circumstances the specifications may incorporate a statement similar to the following: "If concrete does not meet specified 28 day strength (psi), the edges have "curled" or there is uneven settlement, the Contractor shall, in a credit change order, credit the project 50% of the concrete cost of the substandard pour in the event the substandard concrete is allowed to remain.

The control joints shall not be spaced farther than 2 to 3 times the slab thickness expressed in feet.

Concrete mix design, timely application of curing methods and saw cutting of the control joints has to be clearly identified in the concrete construction specifications for each project.

Depress slabs at exterior entrances for 3M Nomad Extra Duty Matting (not backed).

III. SECTION 033050 CONCRETE RAMPS FOR ADA:

City facilities, as public buildings, shall be designed and constructed for accessibility and use by the disabled. Refer to Division 01, General Conditions, ADA Section 013500.

Concrete ramps not meeting these requirements will be removed and replaced at no cost to the City until the required slopes are achieved. Leveling and smoothing the cured concrete by grinding is not acceptable.

TABLE OF CONTENTS

I. SECTION 040000 MASONRY- GENERAL

SECTION 040000 - MASONRY

I. GENERAL

Mortar shall be type S. 1800 psi compressive strength of 28 days for all bearing and non-bearing work. Mortar shall not contain fly ash and/or sodium chloride (NaCl).

Grout shall be 2000 psi minimum compressive strength in 28 days.

All exposed mortar joints shall be pointed and tooled. No exposed flush joints will be allowed.

Add weather stops over all exterior windows and doors.

Masonry control joints shall be caulked inside and out before additional wall finish materials are applied.

Reinforcing steel shall be inspected before any grouting proceeds, to verify proper placement, tying and clearances.

If “Special Inspections” are required, please identify that requirement in the “General Notes.”

No light weight block shall be exposed to weather.

All CMU and stone masonry exposed to weather shall be water proof seal-coated. All seal coating shall have a 5 year warranty.

Stone: Specifications shall require samples, mock-ups, when appropriate. Natural Stone Material shall comply with the appropriate ASTM Standards in accordance with their nature and make, and reference thereof incorporated into the project specifications.

Graffiti proofing products, approved by the Project Manager, should be applied to all exposed masonry surfaces that would be considered vulnerable to vandalism. Provide product information, especially if the product needs to be re-applied after graffiti removal.

TABLE OF CONTENTS

I. SECTION 050000 - METALS

II. SECTION 052200 - RAILINGS

SECTION 050000 - METALS

GENERAL

All materials, design, construction and quality of metals shall comply with the adopted building codes, and City of Tucson Amendments and Supplements, including the appropriate chapters for metals and fabrication.

All prime coatings to metals shall be shop primed when possible and not field applied.

All metal railing, play ground equipment, metal benches, interactive art, etc. exposed to direct sunlight and/or susceptible to high temperatures, shall be designed to prevent injuries (i.e., burns and blistering of skin or skin irritations, etc.) where humans may come in contact with the metal.

Walkway canopies, railings and similar work shall be designed to discourage possible access by vandals, burglars, etc. to secure areas and rooftops.

Do not use exterior exposed perforated sheet metal goods on awnings, canopies and shade structures due to possible audible resonances with certain wind velocities and wind directions.

Provisions shall be made with proper protection where interaction may occur with dissimilar metals. This may include fasteners, spacers and attachments.

SECTION 052200 - RAILINGS

City facilities, as public buildings, shall be designed and constructed for accessibility and use by the disabled. Refer to Division 01, General Conditions, ADA Section 013500.Handrails and railings not meeting these requirements will be removed and replaced at no cost to the City until the ADA requirements are achieved.

TABLE OF CONTENT

I. SECTION 060000 - WOOD, PLASTICS AND COMPOSITES

II. SECTION 061000 - ROUGH CARPENTRY

III. SECTION 064116 – PLASTIC LAMINATE CLAD ARCHITECTURAL CABINETS

IV. SECTION 066116 - SOLID SURFACING FABRICATIONS

I. SECTION 060000 WOOD, PLASTICS AND COMPOSITES

GENERAL:

City facilities, as public buildings, shall be designed and constructed for accessibility and use by the disabled. Refer to Division 01, General Conditions, ADA Section 013500. All millwork, handrails, wooden ramps, etc. that do not meet these requirements will be removed and replaced at no cost to the City until the ADA requirements are achieved.

Millwork shall be designed and specified in accordance to AWI standards - premium or custom.

All millwork shall have all exposed edges and sides finished.

II. SECTION 061000 ROUGH CARPENTRY:

Depending upon the classification of the building type where fire treatment is a code requirement, provide a Factory Mutual roof assembly.

For small buildings and additions <u>not</u> requiring Factory Mutual roof assemblies, roof sheathing shall comply with minimum Building Code requirements. Plywood deck Plyclips are not permitted – use solid blocking.

For gypsum board walls in all corridors and heavy use areas, consider using abuse resistant drywall vinyl wall covering or 3/8 " plywood backing. Indicate solid blocking for all wall hung fixtures, doorstops, cabinets and similar items.

No oriented strand board (O.S.B.) will be permitted for City construction projects unless required and specified by the structural engineer.

III. SECTION 064116 – PLASTIC LAMINATE CLAD ARCHITECTURAL CABINETS

Plastic laminate counter tops are <u>not</u> permitted for wet areas or counter tops with plumbing on all City construction projects, use solid surfacing fabrications (Section 066116).

All cabinets and millwork shall be designed and specified in accordance to AWI standards – premium or custom.

Exposed Surfaces: Use premium grade: High-Pressure Decorative Laminate Grade (HGS). on horizontal, vertical and edge surfaces. PVC edging is recommended over glued laminates.

Core Material: MDF per AWI standards.

Semi-exposed Surfaces:

Surfaces other than drawer bodies: High-pressure decorative laminate, Grade VGS.

a. Edges of Plastic-Laminate shelves: PVC edging to match laminate in color, and finish.

b. Semi-exposed backs of panels with exposed plastic-laminate surfaces, provide surface of high-pressure decorative laminate, Grade VGS

Concealed backs of panels with exposed plastic-laminate surfaces: High-pressure decorative laminate, Grade BKL.

Colors patterns and finishes: provide materials and products that result in colors and textures of exposed laminate surfaces comply with samples as selected by the architect from laminate manufacturer's full range.

Provide dust panels of ¼-inch plywood of tempered hardboard above compartments and drawers, unless located directly under tops.

IV. SECTION 066116 SOLID SURFACING FABRICATIONS:

Solid surfacing fabrications for counter tops as manufactured by Corian, LG Hi-Macs, and Staron by Samsung will be accepted. Submit substitute equals for approval. rev2/26/08

Thicknesses: ¼" and ½"Sheets

Performance Properties:

Tensile strength, 6,000 psi, per ASTM D 638
Flexural strength, 10,000 psi, per ASTM D 790
Elongation: 0.5% per ASTM D 638
Hardness: 92 Rockwell "M" Scale per ASTM D 785
Gloss: 60 Gardner between 5 – 20 per NEMA LD-3
Color Stability: No change - 200 hours per NEMA LD-3
Stain Resistance Rating: 41 per ANSI Z 124
Abrasion Resistance: Pass per ANSI Z 124
Fungi and Bacterial Resistance: No growth per ASTM G 21, G22
Flammability: Class A / Class 1, per UBC 8-1

Warranty – Provide a 10 year limited warranty

TABLE OF CONTENTS

I. SECTION – 070000 THERMAL AND MOISTURE PROTECTION

II. SECTION - 072000 - INSULATION

III. SECTION - 075000 - ROOFING

A. GENERAL

B. ROOFING SYSTEM STANDARDS

C. REFERENCE STANDARDS

IV. SECTION – 076000 - FLASHING AND COPING

I. SECTION – 070000 THERMAL AND MOISTURE PROTECTION

GENERAL:

To ensure optimum energy efficiency and for pest control purposes, all exterior joints around windows and door frames, openings between wall and foundation, between walls and roof/ceiling, and between wall panels; openings at penetrations of utility services through walls, floors roof systems; and all other such openings in the building envelope shall be caulked, installed with a gasket, weather stripped or otherwise sealed.

II. SECTION 072000 – INSULATION:

Insulate walls with R-19 minimum, total assembly.

The roof shall have an R-38 minimum, total assembly. Include the white reflective roof coating if applicable.

III. SECTION 075000 – ROOFING:

A. GENERAL:

Provide a minimum of 1/2” per foot (of slope) on roof planes and 1/8” per foot in cricket valleys.

Where possible, all roofing materials for each roof system are to be from one roofing manufacturer.

In addition to conforming to roofing manufacturer’s specifications and recommendations, roofing details shall conform to the National Roofing Contractors Association Standards. It is preferred that mechanical equipment will not be located on the roof, except for required roof mounted exhaust fans and ventilators. The consultant must provide alternatives to roof mounting with costs associated with those alternatives.

Anchor points shall be provided for all roofing structures that require fall protection. Pads to be provided at access service points.

Walking pads shall be provided on all roofs which have roof top equipment, requiring maintenance.

New Construction and Re-roofing Projects:

Depending on the roofing system, all roof drains shall have lead or metal flashing. Interior roof drains are not permitted unless specific permission is obtained from the City of Tucson project manager.

Built-up, EPDM, and Hypalon single ply roof systems are not acceptable.

All roofing materials are to be asbestos free, including caulking and sealants.

For new construction and major renovations requiring LEED ratings: Roofing must meet the U.S.G.B.C. requirements for LEED, specifically reflectivity and emissivity. For systems not able to be white coated, the consultant is to select materials with high emissivity.

B. ROOFING SYSTEM STANDARDS

The Roof Systems listed in this section have been used and approved for use on City of Tucson buildings. Please consider these roofing systems in lieu of built-up, EPDM and Hypalon roofing systems.

C. REFERENCE STANDARDS

References to standards, test methods, codes etc., are implied to mean the latest edition of each such standard adopted. The following is an abbreviated list of associations, institutions, and societies which may be used as references throughout the consultant's specifications.

ASTM American Society for Testing and Materials
Philadelphia, PA (215) 299-5585

BOCA Building Officials and Code Administrators International, Inc.
Country Club Hills, IL (708) 799-2300

EPA ENERGY STAR
United States Environmental Protection Agency – Energy Star Key product criteria
www.epa.gov/nrgystar/purchasing/6qq_roof.html

FM Factory Mutual Engineering and Research
Norwood, MA (617) 762-4300

FED SPEC General Services Administration - Specifications Standards
Washington, DC (202) 708-9205

ICBO International Conference of Building Officials
Whittier, CA (213) 699-0541

LEED Refer to SS Credit 7.2: Heat Island Effect: Roof

NRCA National Roofing Contractors Association
Rosemont, IL (708) 299-9070

OSHA Occupational Safety and Health Administrations
Washington, DC (202) 523-8036

SMACNA Sheet Metal and Air Conditioning Contractors National Association
Chantilly, VA (703) 803-2980

UL Underwriters Laboratories
Northbrook, IL (708) 272-8800

SPECIFIED GUARANTEE:

The roofing manufacturer shall guarantee roof areas to be in a watertight condition, for the minimum guarantees as specified for each product (see MINIMUM GUARANTEES below), from the date of final acceptance of the roofing system. The warranty shall be a no dollar limit, non-prorated total system labor and material warranty, for wind speeds up to 72 miles per hour. The total system warranty shall include all roofing materials, related components and accessories including, but not limited to the substrate board, vapor retarder, insulation board, cover board, roofing membrane, membrane flashings, fasteners, adhesives and termination metals and roof drain assemblies. The manufacturer shall repair leaks and defects in materials and workmanship as promptly after observation as weather and site conditions permit. Damage repair as part of the guarantee shall include replacement of wet insulation and damaged decking. The roofing contractor shall approve any sheet metal submittals that pertains to the roof system. Submit sample copy of the specified guarantee to include the Reflective Coatings (if any). Submit letter from the primary roofing manufacturer stating that the proposed application will comply with the manufacturer's requirements in order to qualify the project for the specified guarantee. The guarantee shall be a term type, without deductibles or limitations on coverage amount. This guarantee shall not exclude random areas of ponding from coverage.

MINIMUM GUARANTEES [Based on date of substantial completion of the re-roof. (existing buildings) or substantial completion of the building (new buildings or additions)]:

Contractor/installer	5 years
White Coating	5 years
Modified Bitumen Membrane Roofing	20 years
Single Ply Roofing	20 years
Asphalt Shingles	30 years
Mission or Concrete Tile + underlayment	10 years
Standing Seam Metal Roof	10 years

(If these warranties are not available from the roofing manufacturer and the installer for the various systems, the consultant is to contact the City of Tucson project manager.)

Roofing Contractor's Warranty: The roofing subcontractor shall supply The City of Tucson with a minimum five-year workmanship warranty for each roof. In the event any work related to the roofing, flashing, or metalwork is found to be defective within two years of substantial completion, the roofing contractor shall remove and replace such at no additional cost to the City of Tucson. The roofing subcontractor's warranty obligation shall run directly to the building owner (City of Tucson, General Services Department, Facilities Management Division), and a copy the roofing signed warranty shall be sent to the roofing system's manufacturer.

1. The duration of the Roofing Contractor's five-year warranty shall run concurrent with the roofing system's manufacturer's warranty.

In addition to the guarantee, furnish to the Owner's representative with the manufacturer's printed recommendations for proper maintenance of the specified roof system including inspection frequencies, penetration addition policies, temporary repairs, and leak call procedures.

For Factory Mutual. approved assemblies, please specify F.M. approved roof decks for new construction on buildings with a construction cost estimate of more than $500,000 or for additions to major buildings. This does not apply for re-roof projects, especially if existing deck does not comply with F.M. standards.

REROOF PROJECTS

All re-roof projects must comply with these standards. City of Tucson Owner's representatives will rely on the roofing manufacturer's representatives to help prepare a Scope of Work for the re-roof project. Design consultants shall be responsible for preparing complete construction documents for the re-roof work.

UPON PROJECT ACCEPTANCE

Submit a completed manufacturer's application for roof guarantee and roof coating guarantee form along with shop drawings of the roofs showing all dimensions, penetrations, and details. The form shall contain all the technical information applicable to the project including deck types, roof slopes, base sheet and/or insulation assemblies (with method of attachment, and fastener type), and manufacturer's membrane assembly proposed for installation. The form shall also contain accurate and complete information requested including proper names, addresses, zip codes and telephone numbers. The City of Tucson shall review and approve these submittals as part of the shop drawing process. The project must receive approval, through this process, prior to shipment of materials to the project site. In addition, application practice shall comply with requirements and recommendations contained in the latest edition of the Handbook of Accepted Roofing Knowledge (HARK) as published by the National Roofing Contractor's Association, amended to include the acceptance of a phased roof system installation. Conform to regulations of public agencies, including any specific requirements of the City and/or state of jurisdiction.

Ensure that the primary roofing materials manufacturer provides direct trained company personnel to attend necessary job meetings, perform periodic inspections as necessary, and conducts a final inspection upon successful completion of the project.

DELIVERY

Deliver materials in the manufacturer's original sealed and labeled containers and in quantities required to allow continuity of application.

STORAGE

Store all roofing materials out of direct exposure to the elements. Store all roll goods on a clean, flat and dry surface. All material stored on the roof overnight shall be stored on pallets. Rolls of

roofing must be stored on ends. Store all materials on the roof in a manner so as to preclude overloading of deck and building structure. Store materials such as solvents, adhesives and asphalt cutback products away from open flames, sparks or excessive heat. Cover all material using a breathable cover such as a canvas. Polyethylene or other non-breathable plastic coverings are not acceptable.

HANDLING
Handle all materials in such a manner as to preclude damage and contamination with moisture or foreign matter. Handle rolled goods to prevent damage to edges or ends.

DAMAGED MATERIAL
Any materials that are found to be damaged or stored in any manner other than stated above will be automatically rejected, removed and replaced at the Contractor's expense.

NOTIFICATION
Give a minimum of five (5) days notice to the Owner's representative and manufacturer prior to commencing any work and notify both parties on a daily basis of any change in work schedule.

PERMITS
Obtain all permits required by local agencies if structural modifications are necessary for re-roof projects and pay all fees which may be required for the performance of the work.

SAFETY
Familiarize every member of the application crew with all fire and safety regulations recommended by OSHA, NRCA and other industry or local governmental groups.

TORCH SAFETY
Designate one person on each crew to perform a daily fire watch. The designated crew member shall watch for fires or smoldering materials on all areas of roof construction. Continue the fire watch for four hours after roofing material application has been suspended for the day. Comply with the City of Tucson's Hot Work Policy.

PRECIPITATION
Do not apply roofing materials during precipitation or in the event there is a probability of precipitation during application. Take adequate precautions to ensure that materials applied roofing, and building interiors are protected from possible moisture damage or contamination.

MEMBRANE PROTECTION
Provide protection against staining and mechanical damage for newly applied roofing and adjacent surfaces throughout this project.

SITE CONDITION
Contractor shall complete, to the owner representative's satisfaction, all job site cleanup including building interior, exterior and landscaping where affected by the construction.

ROOF PENETRATION FLASHINGS
Roofing manufacturer is to be responsible and warranty all roof penetration flashings, for pipes and equipment at all roof penetrations by all utilities and trades. Use manufacturer's recommended preformed jack materials and sealants where applicable. Rubber boots are not permitted. Pitch pockets are not permitted unless no other options are available, if used, flashing material must protect the pitch material.

UTILITY J PANS
Utility J pans cannot be mechanically attached directly to the roof deck. If roofing manufacturer's do not have a standard detail for utility J pans, then use the roofing manufacturer's accepted adhesives to attach pan to a separate cut piece of plywood, attach plywood to a roofing slip sheet, adhere J pan, plywood and slip sheet to roofing surface.

INTERNAL DRAINS
Internal roof drains are not permitted on all new construction unless specific permission is obtained from the City of Tucson project manager.

AIR BARRIERS
If roof sheathing is applied over corrugated metal deck, apply a fully adhered air barrier on the sheathing before adding the insulation board. This will help prevent wind uplift roof failures.
rev4/8/08

SKYLIGHTS
Metal bars or metal cages must be added for security. See code requirements for safety and fall protection.

BALLASTS
River rock and gravel are not acceptable. Use masonry cap blocks where possible.

BLOCKING AND PIPE SUPPORTS
Roller type pipe supports, "Unistrut" and redwood supports are acceptable with roofing manufacturer's recommended slip sheets and adhesion requirements. Roller-type pipe supports are recommended for long runs of piping where expansion and contraction must be considered.

WHITE REFLECTIVE COATINGS

All roofing systems with granulated surfaces or finished roof surfaces not meeting the following criteria shall have applied white reflective roof coatings unless the roof has street visibility and where roof aesthetics is a major element of the building design.

a) Initial Solar Reflectance Greater than or equal to 0.65.
b) Maintenance of Solar Reflectance Greater than or equal to 0.50 three years.
c) Minimum infrared emitance to be 85% or more.
d) A five year Manufacturer warranty for defects in materials and manufacturing is required. In addition, a five-year application warranty is required from the applicator. The applicator shall warrant against non-compatible materials, diluted materials and insufficient mil thickness of the application. All new roofs shall be coated in two applications at a rate of 2 gallons per 100 S.F. per application.

SAFETY

No open flames are preferred for all roofing applications. Primers and adhesives with chemical or noxious odors are not permitted at day care facilities or neighborhood facilities where children may be exposed to prolonged use of such materials.

PRE-ROOFING CONFERENCE

Hold a meeting prior to beginning the roofing project on site to examine the existing roof or roof deck conditions. Establish special conditions and recommendations for corrections to meet all guarantees and warranties. Note all problem areas and recommendations for corrections. Establish sequence of work and scheduled deliveries. Establish storage locations of delivered materials. Establish maximum daily work areas prior to adding water cut off in case of after hour precipitation.

POST-INSTALLATION MEETING

Hold a meeting at the completion of the roofing project, attended by all parties that were present at the pre-roofing conference. A punch list of items required for completion shall be compiled by the Contractor and the manufacturer's representative. Complete, sign, and mail the punch list form to the manufacturer's headquarters.

DRAIN VERIFICATION

At final inspection of all work, verify that all drains, scuppers, etc., are functioning properly. Ensure that roof drains have adequate strainers.

ISSUANCE OF THE GUARANTEE

Complete all post installation procedures and meet the manufacturer's final endorsement for issuance of the specified guarantee.

FIVE-YEAR INSPECTION

Contractor to contact the manufacturer during the ninety (90) day period immediately preceding the five(5) year anniversary of the guarantee date to arrange for a mandatory five-year inspection. The inspection shall be attended by the Contractor and the manufacturer's representative. A five-year inspection punch-list shall be compiled by the manufacturer and submitted to the Contractor for his completion. Upon completion sign and mail the punch-list form to the manufacturer's headquarters, verifying that all items are in accordance with the manufacturer's recommendations.

INTERMITENT INSPECTIONS

The manufacturer's representative shall make at least five inspections spaced evenly through warranty time period. The manufacturer's representative shall give the owner's representative a twenty day notice of the inspection. These inspections shall be attended by the Owner's representative and the manufacturer's representative. An inspection punch-list shall be compiled by the owner's representative and manufacturer's representative on any and all manufacturer defects (non warranty items will be itemized on a separate list to be completed by the Owner's representative at the City's expense) The warranty punch-list is then submitted to the manufacturer for completion at the manufacturer's expense. Upon completion, the contractor hired by the manufacturer shall sign and mail the punch-list form to the manufacturer head-quarters, verifying that all items are in accordance with the manufacturer's recommendations. The manufacturer's representative will inspect all repairs, warranty and/or non-warranty and shall verify all repairs were performed, all repairs comply with the manufacturer's recommendations and the manufacturer's warranty remains in tact.

MODIFIED BITUMEN MEMBRANE ROOFING WITH WHITE REFLECTIVE COATING

MODIFIED BITUMEN MEMBRANE ROOFING SYSTEM

Smooth surfaced modified bitumen base ply, applied in Cold Adhesive; White coated granule surfaced or white painted foil-surfaced modified bitumen finish ply, applied in Cold Adhesive.

FLASHING SYSTEM

Due to local conditions of extreme heat in the summer months and the expansion and contraction differences of roof and wall construction materials, use metal expansion joint flashings at parapet walls same or similar to "Siplast" flashing details 150-W2 or
150- W2-A

PARAPET (non-wall supported deck)

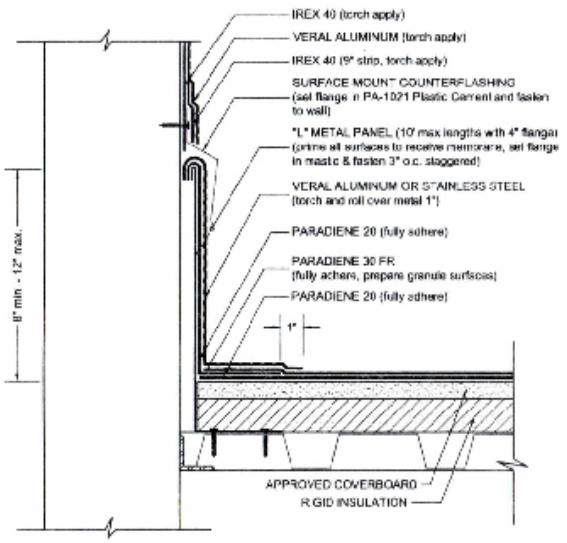

L-METAL JOINT TREATMENT

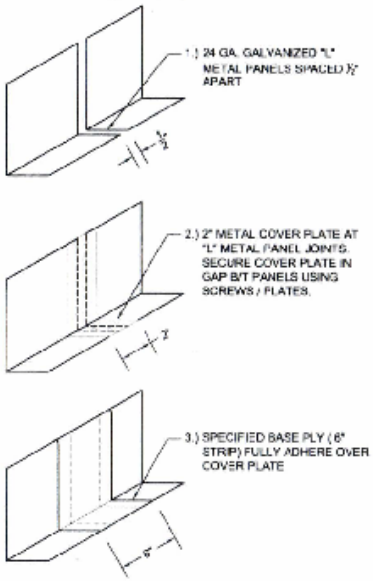

NOTES:
1. PA-1021 PLASTIC CEMENT AND PA-1125 PRIMER ARE REQUIRED WHERE MASTIC AND PRIMER ARE INDICATED.
2. PREPARE GRANULE SURFACES UNDER ALL FLASHING MATERIALS BY TORCH PREPARATION.
3. THE CARPENTRY AND METAL WORK SHOWN DEPICTS SHOP FABRICATION AND JOB-SITE ASSEMBLY. THESE COMPONENTS SHOULD BE DESIGNED/FABRICATED/INSTALLED ACCORDING TO GENERALLY ACCEPTED INDUSTRY PRACTICES, STANDARDS AND APPROVALS.
4. DISSIMILAR METAL TYPES SUBJECT TO ELECTROLYTIC REACTION SHOULD BE PHYSICALLY SEPARATED.
5. REQUIREMENTS AND RECOMMENDATIONS DETAILED IN SIPLAST SPECIFICATIONS SHALL APPLY IN ADDITION TO THE ABOVE DRAWING.

CAUTION: SIPLAST RECOMMENDS THAT ALL PRACTICES PERTAINING TO NRCA CERTA GUIDELINES BE FOLLOWED WHEN TORCHING METHODS ARE EMPLOYED. THIS INCLUDES PERFORMING A FIRE WATCH FOLLOWING ANY TORCH APPLICATIONS. ALWAYS HAVE APPROVED FIRE-EXTINGUISHING EQUIPMENT NEARBY.

N.T.S.

siplast — Siplast - 1000 East Rochelle Boulevard - Irving, Texas - 75062-3940
(800) 922-8800 FAX: (469) 995-2206 www.siplast.com

Ref. #: 150-W2-A
Date: 7-10-07

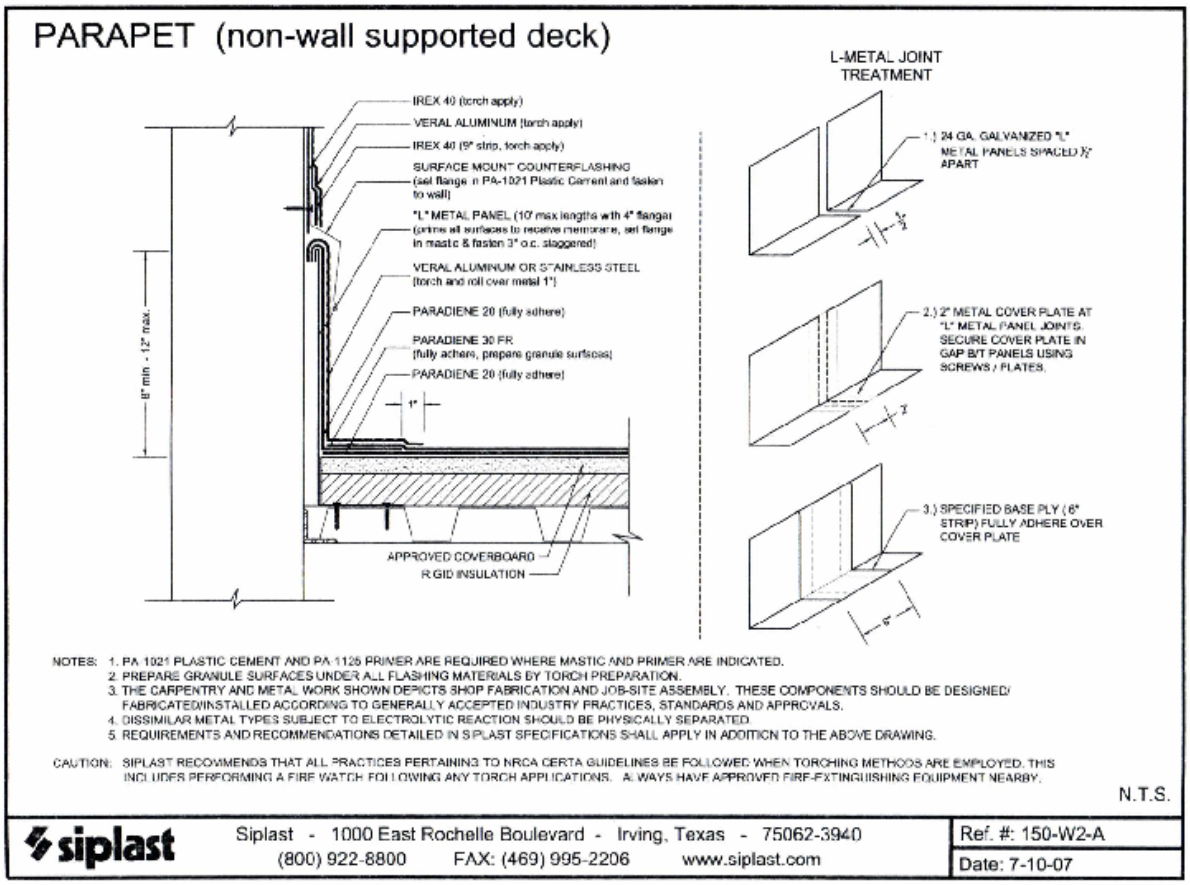

WHITE ROOF COATING

Reflective roof coating warranted a minimum of 10 years by the roof system supplier. Submit Energy Star Labeled Characteristics and Performance Specification for reflective coatings. The coatings must meet the criteria for U.S.G.B.C. for reflectivity and emissivity.

WHITE PAINTED FOIL-SURFACED FINISH PLY

Painted surface must carry the same twenty year warranty as the membrane. Submit Energy Star Labeled Characteristics and Performance Specification for painted finishes. The painted coatings must meet the criteria for U.S.G.B.C. for reflectivity and emissivity.

SPECIFIED GUARANTEE

Twenty year minimum. (add specified guarantee requirements as recommended by the project manager)

ACCEPTABLE PRODUCTS
Provide primary roofing products, including each type of sheet, supplied by a single manufacturer that has been successfully producing the specified types of primary products for not less than ten (10) years. Provide secondary or accessory products acceptable to the manufacturer of the primary roofing products. Provide EPA-Energy Star Compliance Criteria for white reflective coatings; Initial Solar Reflectance, Maintenance of Solar Reflectance at three years after installation, and Manufacturer's warranty for defects in materials and manufacturing. Comply with the latest EPA – Energy Star Compliance Criteria for reflective coatings.

TEMPERATURE RESTRICTIONS: COLD ADHESIVE
At low temperatures, the specified cold adhesive becomes more viscous, making even distribution more difficult. The cold adhesive should be stored in a warm place immediately prior to use. A shop squeegee should be used to assist in an even distribution of the adhesive (cut notches out of the rubber blade of the squeegee). Application should be suspended in situations where the adhesive cannot be kept at temperatures allowing for even distribution.

MANUFACTURERS
Subject to compliance with requirements, provide products by one of the following:
1. Siplast - Siplast Paradeine 2030FR and veral flashing plus white coating
2. Soprema - Elastophene 180 base with Sopralene 180 FR cap with Sopralast 57(Aluminum) flashing. Compares to Siplast Paradeine 2030FR and Veral flashing plus white coating. See self adhered application paragraph below.
3. Johns Manville - Dynabase with Dynaglas 30 FR Cap with Dynaclad flashing compares to Siplast Paradeine 2030FR and Veral flashing plus white coating. See self-adhered application paragraph below.

RIGID ROOF INSULATION
Provide roof insulation that is UL and/or FM approved. All panels must possess adequate rigidity to span the flute openings of metal roof decks. Provide insulation that is approved in writing by the insulation manufacturer for intended use and for use with the specified roof assembly. Install insulation as a separation layer over the roof deck, the existing substrate and/or to obtain the desired thermal R-value where specified or required. Maintain a maximum panel size of four (4) feet by four (4) feet where insulation is specified to be installed in hot asphalt.

MEMBRANE APPLICATION
Apply roofing in accordance with roofing system manufacturer's instructions and the following requirements. Application of roofing shall immediately follow application of base sheet and/or insulation as a continuous operation.

AESTHETIC CONSIDERATIONS
An aesthetically pleasing overall appearance of the finished roof application is a standard requirement for this project. The contractor shall make necessary preparations, utilize recommended application techniques, apply the specified materials (i.e. granules, reflective roof coating, metallic powder, etc.), and exercise care in ensuring that the finished application is acceptable to the Owner's representative.

PRIMING
Prime metal flanges (all jacks, edge metal, lead drain flashings, etc.) and concrete and masonry surfaces with a uniform coating of ASTM D 41-85 asphalt primer.

MEMBRANE ADHESIVE APPLICATION
Apply cold adhesive in a smooth, even, continuous layer without breaks or voids at the rate of 1 1/2 gallons per square per ply. (The porosity of some substrates may require a heavier application to ensure full adhesion.)

SELF-ADHERED APPLICATION
See manufacture's application instructions. Product should be compared to be same or similar to Soprema Colphene FR Granules with Soprema Alsan Flashing Material. White coating is required. Twenty-five year warranties are preferred for this application.

BITUMEN CONSISTENCY
Cutting or alterations of bitumen, primer, and sealants will not be permitted.

ROOFING APPLICATION
Apply all layers of roofing free of wrinkles, creases or fish-mouths. Exert sufficient pressure on the roll during application to ensure prevention of air pockets. Stagger the lap seams between the base ply layer and the finish ply layer. Stagger the courses to ensure this.
1. Apply all layers of roofing perpendicular to the slope of the deck.
2. Fully bond the base ply to the prepared substrate, utilizing minimum three (3) inch side and end laps. Apply each sheet directly behind the cold adhesive applicator. Stagger end laps a minimum of three (3) feet.
3. Fully bond the finish ply to the base ply, utilizing minimum three (3) inch side and end laps. Apply each sheet directly behind the cold adhesive applicator. Stagger end laps of the finish ply a minimum three (3) feet. Stagger side laps of the finish ply a minimum twelve (12) inches from side laps in the underlying base ply. Stagger end laps of the finish ply a minimum three (3) feet from end laps in the underlying base ply.
4. Maximum sheet lengths and special fastening of the specified roof membrane system may be required at various slope increments where the roof deck slope exceeds one-half (1/2) inch per

foot. The manufacturer shall provide acceptable sheet lengths and the required fastening schedule for all roofing sheet applications to applicable roof slopes.

GRANULE EMBEDMENT
Broadcast mineral granules over all bitumen overruns on the finish ply surface, while the bitumen is still hot, to ensure a monolithic surface color.

FLASHING APPLICATION – MASONRY
Flash masonry parapet walls and curbs using the reinforcing sheet and the metal foil flashing membrane. The reinforcing sheet shall have minimum three (3) inch side laps and extend a minimum of three (3) inches onto the base ply surface and three (3) inches up the parapet wall above the cant. Fully adhere the flashing reinforcing sheet. The laps of the metal foil flashing layer and the lap seams in the reinforcing layer should not coincide. After the final roofing ply has been applied to the top of the cant, prepare the surface area that is to receive flashing coverage by torch heating granular surfaces or by application of asphalt primer; allowing primer to dry thoroughly. Torch apply the metal foil-faced flashing into place using three foot widths (cut off the end of roll) always lapping the factory selvage edge. Extend the flashing sheet a minimum of four (4) inches beyond the toe of the cant onto the prepared surface of the finished roof and up the wall to the desired flashing height. Exert pressure on the flashing sheet during application to ensure complete contact with the wall/roof surfaces, preventing air pockets; this can be accomplished by using a damp sponge or shop rag. Check and seal all loose laps and edges. Nail the top edge of the flashing on nine (9) inch centers. (See manufacturer's schematic for visual interpretation).

FLASHING APPLICATION - WOOD SURFACES
Flash wood or plywood parapet walls and curbs using the reinforcing sheet and the metal foil flashing membrane. The reinforcing sheet shall have minimum three (3) inch side laps and extend a minimum of three (3) inches onto the base ply surface and to the top of the parapet wall, curb, etc. Nail the reinforcing sheet through the field of the sheet to the vertical wood surface on twelve (12) inch centers from the top of the cant to top of wall, curb, etc. Fully adhere the remainder of the flashing reinforcing sheet that extends over the cant and roof level. After the final roofing ply has been applied to the top of the cant, prepare the surface area that is to receive flashing coverage by torch heating granular surfaces or by application of asphalt primer; allowing primer to dry thoroughly. Torch apply the metal foil-faced flashing into place using three foot widths (cut off the end of roll) always lapping the factory selvage edge. Extend the flashing sheet a minimum of four (4) inches beyond the toe of the cant onto the prepared surface of the finished roof and up the wall to the desired flashing height. Exert pressure on the flashing sheet during application to ensure complete contact with the wall/roof surfaces, preventing air pockets; this can be accomplished by using a damp sponge or shop rag. Check and seal all loose laps and edges. Nail the top edge of the flashing on nine (9) inch centers. (See manufacturer's schematic for visual interpretation).

WATER CUT-OFF
At end of day's work, or when precipitation is imminent, roofing contractor to construct a water cut-off at all open edges. Cut-offs can be built using asphalt or plastic cement and roofing felts, constructed to withstand protracted periods of service. Cut-offs must be completely removed prior to the resumption of roofing.

PHASED CONSTRUCTION
Phased construction will be required as standard policy of the roofing manufacturer. Large areas of roofing may be dried in with first ply of SBS membrane and left exposed for long periods.

WHITE REFLECTIVE COATING ON GRANULAR SURFACING
White reflective coatings are to be applied after the roofing system has been installed and approved by the manufacturer's representative and the owner's representative. The coating shall then be applied to roof surface in a uniform mil thickness as prescribed by the roof coating manufacturer. The roof coatings must be allowed to dry, "set-up" or cure per the manufacturer's instructions prior to any roof traffic or continued roof construction. The coatings must meet the criteria for U.S.G.B.C. for reflectivity and emissivity.

ROOF PENETRATION FLASHINGS
Use if preformed jacks are not used:

LEAD DRAIN FLASHINGS
If preformed jacks are not used, completely prime the lead drain flashing and allow to dry prior to installation. After the base ply has been applied, set the lead flashing sheet in mastic and form to turn down inside of the drain bowl. Ply-in the perimeter of the lead flashing using an additional layer of the base ply material, overlapping the perimeter of the lead a minimum of four (4) inches. The finish ply shall then be applied, extending beyond the clamping ring seal. Install the clamping ring with all clamps, bolts etc., in place. (See manufacturer's schematic for visual interpretation).

METAL PIPE FLASHINGS
Completely prime the metal pipe flanges and allow primer to dry prior to installation. After the base ply has been applied, set the flanges in mastic and strip-in the flange using the base ply material, extending a minimum of four (4) inches beyond the edge of the flange. The finish ply shall then be applied, terminating at the flange-sleeve juncture of the pipe flashing. Install a watertight umbrella to the penetration, completely covering the opening of the pipe flashing.

NOTE: These components are used to flash heat pipes, include equipment supports (round pylons) and pipe penetrations where movement is anticipated.

SINGLE PLY ROOFING SYSTEMS

Smooth surfaced membranes are weft inserted polyester reinforced, formulated of an ultra violet resistant, polyvinyl chloride (PVC). White colors are preferred. Submit Energy Star Labeled Characteristics.

APPLICATION STANDARDS
Mechanically attached, adhered and self adhered roof systems must be classified by UL (Underwriter's Laboratories) and Factory Mutual.

SPECIFIED GUARANTEE
Twenty-year minimum. (add specified guarantee requirements as recommended by the project manager)

ACCEPTABLE USES
Install in new, re-roof (tear-off) and recover roof constructions. In recover construction, if the existing roof is sound, the roof system can eliminate the cost of disposing the original roof. Membranes can be installed over roofing manufacturer's approved cushioning layers or insulations, when required, and secured to the roof deck utilizing either mechanical fastening methods that have been tested for wind uplift in both dynamic and static pressure vessels or adhering the membrane to an acceptable substrate. Membranes are to be thermoplastic; therefore, when rolled out onto the roof substrate, they can be easily welded into one homogeneous sheet using hot-air welding procedures. An independent sealant, consisting the same material as the membrane itself, is applied at all non-encapsulated or cut edges of the membrane seam edge. No dissimilar materials are to be used to bond the seams.

MEMBRANE RESTRICTIONS
According to Factory Mutual requirements, membranes are mechanically fastened or adhered to the structural roof deck. FM has published standard fastening patterns or adhesive recommendations. The membranes shall not come into direct contact with asphalt, coal tar pitch, or any petroleum-based product.

SURFACE PREPARATION
The entire area to be roofed must be inspected by a manufacturer's approved applicator to determine if installation of a single ply roof system is acceptable. The substrate must be clean, smooth, dry, free of flaws, debris, and other irregularities.

MEMBRANE PLACEMENT

Most manufacturer specifications require treated wood nailers to be installed according to Factory Mutual current recommendations in Loss Prevention Data Sheet 1-49. Insulation must neatly fit around all roof penetrations and projections.
Insulations used must be accepted by the manufacturer for use in the single ply roofing system to be installed. Fastening of the insulation must be in strict accordance with the roofing manufacturer's standard fastening requirements, whichever is most restrictive.

METHOD OF ATTACHMENT
The membrane may be attached using either the adhered or mechanically fastened methods. For the adhered system, the membrane is adhered to the approved substrate with the roofing manufacturer's own membrane adhesive. For mechanically fastened systems, the roofing manufacturer either supplies or recommends a disk and fastener system which is installed within the laps at increments determined by the applicable building codes, roofing manufacturer's specification criteria or printed guide specifications and/or technical data, whichever is most restrictive.

THICKNESS
A minimum 60 mil will be allowed. Higher thicknesses may be required as determined by the wear-ability requirements for each roof and the projected amount of foot traffic and abuse the finished roof is to endure.

MANUFACTURERS
Subject to compliance with requirements, provide products by one of the following:
1. Sarnafil 60 mil PVC sheet
2. GAF 60 mil PVC sheet
3. Johns Manville – UltraGard SR-60.

RIGID ROOF INSULATION
Provide roof insulation that is UL and/or FM approved. All panels must possess adequate rigidity to span the flute openings of metal roof decks. Provide insulation that is approved in writing by the insulation manufacturer for intended use and for use with the specified roof assembly. Install insulation as a separation layer over the roof deck, the existing substrate and/or to obtain the desired thermal R-value where specified or required. Provide a cushion layer where the insulation cannot "smooth-out" existing roof conditions with protrusions, edges, etc.. Do not use laminated insulation board. Stagger seams of insulation board with seams for the membrane sheets.

MEMBRANE APPLICATION
Apply roofing, weld seams, seal edges, etc. in accordance with roofing system manufacturer's instructions. Refer to the manufacturer's Material Safety Data Sheet and Product Labeling prior to the application.

AESTHETIC CONSIDERATIONS
An aesthetically pleasing overall appearance of the finished roof application is a standard requirement for any project. The contractor shall make necessary preparations, utilize recommended application techniques, and exercise care in ensuring that the finished application is acceptable to the Owner's representative. rev4/18/08

ADHERED INSTALLATION
Stir adhesives well, do not thin. Apply adhesive in a smooth, even, continuous layer without breaks or voids. Follow manufacturer's requirements for sufficient adhesive application thicknesses, approved application tools and drying times with considerations to existing environmental conditions. Manufacturer application requirements should be specific to substrate materials and the roofing membrane.

ADHERED ROOFING AND SELF-ADHERED APPLICATION
Apply all sheets of roofing free of wrinkles, creases or fish-mouths. Exert sufficient pressure to ensure good contact between the substrate and the membrane for adhered applications.

FLASHING APPLICATION
Flash parapet walls and curbs using the pre-formed sections, outside corners or inside corners, or same single ply material at a thicker gage as the field. Flashing metal at 24 gage can be clad with non-reinforced membrane and be used for flashing and edge metal detailing.

TERMINATION BAR
An extruded aluminum bar 3/32 inch thick can be used to terminate adhered, reinforced membrane base flashings in certain construction as recommended by the manufacturer.

MEMBRANE FASTENERS &PLATES
Roofing manufacturers offer a variety of membrane and insulation fasteners and plates to meet specific job conditions. Request a shop drawing showing the roof plan with fastener types and fastener recommended spacing and pattern.

WATER CUT-OFF
At end of day's work, or when precipitation is imminent, construct a water cut-off at all incomplete edges. Straighten the insulation line using pieces of insulation loosely laid and seal the roofing system's sheet membrane to the deck or existing membrane. Cut-offs can be built using hot asphalt or plastic cement over-laid with an embedded reinforcement. Cut-offs must be completely removed including the contaminated membrane prior to the resumption of roofing. Dispose of discarded cut-off materials off site.

ROOF PENETRATION FLASHINGS

Use roofing manufacturer's prefabricated vent pipe boots and penetration pans as well as preformed inside and outside corners.

INSULATION
The insulation shall be compatible with roofing manufacturer's roofing membrane and membrane adhesives. Insulations not supplied by the roofing manufacturer shall be approved by the roofing manufacturer's technical services department.

BASE SHEET AND BASE SHEET FASTENERS
Base sheets may be utilized in adhered specifications over lightweight insulating concrete and gypsum decks. Use fasteners as recommended by the roofing manufacturer's for coated base sheets to specific deck types. Base sheet fasteners must meet current NCRA recommendations and specific requirements of the deck manufacturer.

VAPOR RETARDERS
Vapor retarders shall meet specific codes and/or insurance requirements, be compatible with insulations and other accessories acceptable to the roofing manufacturer. It is the sole responsibility of the roofing consultant/designer to determine the need for a vapor retarder, and its type and location in the roofing system, (over walk-in freezers and coolers, for example).

QUALITY CONTROL OF SEAMS
After heat welding, the seams are to be checked for integrity with a blunt-ended probe. Any openings or "fish-mouths" shall be repaired with a hand held hot air tool fitted with narrow nozzle tip and with a roller. Each day, several sections of welded seams shall be pulled apart by the roofing contractor to test the quality of the welds. Should the welds be deficient, a more thorough examination of the work performed must be carried out and necessary repairs made.

PRECAST PAVERS
Install pre-cast concrete pavers acceptable to the roofing manufacturer over one layer of the roofing manufacturer's mat protection material or other approved protection layer.

MAINTENANCE INSTRUCTIONS
Provide the City of Tucson's Facilities Management Division with maintenance instructions and a maintenance record log book to retain the entire warranty period.

OTHER ROOFING SYSTEMS:

ASPHALT SHINGLES

Acceptable manufacturers: LANDMARK or OWENS CORNING – Architectural grade 30 year warranty, minimum(add specified guarantee requirements as recommended by the project manager). No white coating required.

MISSION OR CONCRETE TILE

Acceptable tile under-layment manufacturers; SOPREMA:
SIPLAST
JOHNS MANVILLE
10-year warranty minimum (add specified guarantee requirements as recommended by the project manager).

STANDING SEAM METAL ROOFING

Minimum 24 gauge, ASTM A-446, grade "A" steel with white reflective finish is preferred although other colors with high emissivity and meeting Energy Star requirements will be considered. Submit Energy Star Labeled Characteristics and Performance Specification for reflectance. 10-year warranty minimum (add specified guarantee requirements as recommended by the project manager). rev4/18/08

In addition to conforming to roof manufacturer's specifications and recommendations, metal roofing details shall conform to details in accordance to SMACNA.

IV. SECTION 076000 FLASHING AND COPING

Wrap all parapets to cap edge. Total wrap interior parapets not visible to street level.

Metal copings shall be installed on all parapets. Mortar caps are discouraged.

In addition to conforming to roof manufacturer's specifications and recommendations, sheet metal flashing details shall conform to details in accordance to SMACNA.

Minimum sheet metal thickness shall be 24 gauge for flashing and heavier gauges shall be used where appropriate.

Sheet metal curbs or curbs provided by equipment manufacturers are preferred for rooftop mounted equipment.

Curbs shall not be closer than 30" to each other or to parapet or other walls.

Skylights shall be curb mounted and shall have proper fall protection.

Pitch pockets are not permitted on City of Tucson projects without sheet metal UV protection.

TABLE OF CONTENTS

I. GENERAL

II. SECTION 081416 - FLUSH WOOD DOORS

III. SECTION 083113 - ACCESS DOORS

IV. SECTION 081713 - STEEL DOORS AND FRAMES

V. SECTION 087100 - FINISH HARDWARE

VI. SECTION 088100 - GLASS AND GLAZING

VII. SECTION 086000 - SKYLIGHTS

I. GENERAL

All openings for passage ways and building exiting requirements shall meet the most current codes being enforced by the City of Tucson, Development Services Division.

City facilities, as public buildings, shall be designed and constructed for accessibility and use by the disabled. Refer to Division 01, General Conditions, ADA Section 013500.

The use of folding doors shall be reviewed with the City of Tucson project manager. If used, they shall have the same STC as the surrounding walls/partitions.

Design and details shall allow the ease of access for re-glazing.

All windows and glazing shall be insulated window systems and constructed with low-e glass. Designers should demonstrate how they have addressed in their designs their considerations of solar orientation, shading of windows, and control of heat gain.

Triple pane insulated glass window systems should only be considered if noise reduction is an issue. Extra protection against breakage should be considered.

All windows and exterior doors shall be weather stripped to achieve minimum air infiltration.

Curtain walls and storefront systems shall be glazed using insulated glass.

II. SECTION 081416 - FLUSH WOOD DOORS

Except for cabinet and fire rated doors; all wood doors shall be staved lumber core, 1-3/4" thick. Some composite core doors are acceptable with certain areas reinforced with solid wood for locksets, closers, hinges, panic devices, etc. Please contact the City of Tucson Locksmith at 791-3141 X 330.

rev4/18/08

Recreation centers only: Do not use wood doors in public areas (use steel doors).

Check for fire rated doors on 1-hour corridors and area separations.

III. SECTION 083113 - ACCESS DOORS

All access doors shall be metal and shall be fire rated as required. Provide access doors to attics, valves in walls or ceilings, roofs, crawl spaces, tunnels and similar spaces where City personnel must have access for maintenance or repair. Provide key locks on all access doors in public areas.

IV. SECTION 081713 - STEEL DOORS AND FRAMES

DOORS
FACE SHEETS, interior - 16 gauge.

FACE SHEETS, exterior - 14 gauge.

MINIMUM THICKNESS - 1-3/4".

STIFFENERS - 18 gauge - continuous vertical formed steel sections, 6" apart, spot-welded to both face sheets 5" O.C.

VERTICAL EDGES - continuous weld with 14 gauge channel (1" legs) reinforcement.

TOPS AND BOTTOMS - closed with 14 gauge continuous recessed steel channel, spot welded to face sheets.

GLASS STOPS - fixed moldings welded to door on security side; all stops 16 gauge.

LOUVERS - welded blade type construction, 14 gauge blades welded or tensioned to frame. Exterior doors shall have steel framed screens secured to back of louvers; wire screen shall be 1/4" galvanized hardware cloth.

HARDWARE REINFORCEMENT - door hinge and pivot 3/16" place lock face, flush bolts, closures 12 gauge sheet metal.

EXTERIOR DOORS - shall be independently certified energy performance products. The "National Fenestration Council" shall certify these products. The energy performance shall include u-values, solar heat gain, fill between multiple glazed units and visible transmittance.

FRAMES
INTERIOR OPENINGS - 14 gauge.

EXTERIOR OPENINGS - 14 gauge.

CONSTRUCTION - welded units with integral stop and trim.

FLOOR ANCHORS - 14 gauge welded inside jambs.

JAMB ANCHORS - masonry walls - adjustable T-strap 2"x10"x14 gauge or 0.156" wire.

DUST COVERS - 26 gauge

LOOSE GLAZING STOPS - 16 gauge cold rolled steel.

HARDWARE REINFORCEMENT - frames hinge and pivot - 3/16" plate. All other hardware - 7 gauge sheet steel.

V. SECTION 087100 - FINISH HARDWARE

GENERAL

Doors in 1 hour rated corridor must be self-closing, latching and smoke sealed.

All door hardware shall conform to ADA requirements.

Deactivation of automatic door hardware shall not require the use of ladders, removal of panels, etc.

Exit devices on rooms or areas with occupancy over 50.

Kick plates on all doors.

DOOR HARDWARE STANDARDS

Door Hardware is tested over extended periods of time on high usage doors before it is approved. Already approved hardware will be removed from the Approved Hardware listing if failure rate so indicates.

Cylindrical Locksets

Cylindrical locks will be used whenever possible for new construction, remodeling and lock replacement. Lever models will be used to comply with the Americans with Disabilities Act. Lever designs will comply with all appropriate codes. Finish 626 (26D) standard. ADA unisex restrooms accommodating only one individual will utilize a corridor/dormitory function lever set.

Approved models:

Corbin Russwin CL3300 Series, NZD, MO6
Schlage D Rhodes Series
Yale 5400LN AU

Mortise Locksets

Mortise locksets may be used if approved by Facilities Management Lock Shop. Lever models will be used to comply with the Americans with Disabilities Act. Lever designs will comply with all appropriate codes. Finish 626 (26D) standard.

Approved models - Falcon M Series DN Design

Exit Devices

All exit devices should be rim type and installed with a mullion in double door application. **Vertical rod systems will not be used without express authorization and compelling requirement.** Finish to meet other building door hardware. 626 (26D) standard.

Approved models:
Corbin Russwin ED4000/5000 Series
Von Duprin 88 and 99 Series
Yale 7100 series

Cylinders and removable cores

All new construction will match the City of Tucson keying system. When remodeling, the cylinders may be required to match the existing system for that building. The Facilities Management Lock Shop will specify which keyway to be used. If keying into an existing system, original cylinders in the appropriate keyway shall be used. Pinning of cylinders and cores and key cutting will be done by the Facilities Management Lock Shop. Key blanks and zero bitted cylinders/cores will be provided by the contractor.

Schlage Everest key cylinder series is not acceptable.

Automatic Barrier-free Entrances

Approved Models:
Horton Easy Access Series 7000
Gyro Tech 700 Series
Stanley Magic-Door Series

Keyless/Electronic Locks

Approved Models: Alarm Lock Trillogy PDL3000

Hinges
All hinges will be Industrial grade, ball bearing design with non-removable pin feature for doors opening out.

Approved Manufacturers:
Stanley
Hager
Lawrence

Door Closers

Approved Models:
LCN 4000 Series
Norton 7500
Rixon floor closers

Notes:

- Doors that lead to areas that might prove dangerous to a visually impaired person will have a lever, pull or other operating hardware identifiable to the touch by a textured surface. (ARS 34-432)

- No Exceptions to the above hardware will be specified or used in, City of Tucson, construction without prior testing, evaluation and approval by the Facilities Management Lock Shop.

Card Readers

The only stand alone card reader, card reader/lock that is approved by the Facilities Management Lock Shop is the Alarm Lock Trillogy 3000PDL. Card reader systems must be compatible with the Lenel Onguard/Enterprise System.

VI. SECTION 088100 - GLASS AND GLAZING

Glass in doors and sidelights:

Provide float glass with double pane insulated low emissivity laminated or DSB where code requires; and glass shall be wire type.

Provide insulated glass with a thermal break window system for all exterior window systems.

All glass shall be designed such that direct sunlight into office spaces or other areas is avoided unless part of a day lighting strategy. South facing glass shall have sufficient overhang to prevent direct sunlight during the cooling season. Spaces that will require cooling due to excessive glass during the heating season are not allowed.

Exterior glazing must be double-glazed with low E coating and inert gas between the panes.

Exterior glazing shall be independently certified energy performance products. The "National Fenestration Council" shall certify these products. The energy performance shall include u-values, solar heat gain, fill between multiple glazed units and visible transmittance.

SECTION 086000 - SKYLIGHTS

Skylights and roof top clerestories over interior spaces shall not be used on any City project unless approved by the Project Manager.

Skylights and roof top clerestories over interior spaces shall be independently certified energy performance products. The "National Fenestration Council" shall certify these products. The energy performance shall include u-values, solar heat gain, fill between multiple glazed units and visible transmittance.

TABLE OF CONTENTS

I. SECTION 092000 – PLASTER AND GYPSUM BOARD

II. SECTION 093000 – TILING

III. SECTION 095100 – ACOUSTICAL CEILINGS

IV. SECTION 096400 – WOOD FLOORING

V. SECTION 096500 - RESILIENT FLOORING

VI. SECTION 096800 - CARPETING

VII. SECTION 099000 – PAINTING AND COATING

VIII. SECTION099100 – WALL COVERINGS

General – Finishes:

Utilize finish materials that help the City of Tucson comply with LEED Requirements.

I. SECTION 092000 PLASTER AND GYPSUM BOARD

Portland Cement Exterior Plaster (stucco) locate expansion joints as recommended by (Industry) standards, but not more than 10 feet on center nor defining panels greater than 100 square feet.

Portland Cement Exterior Plaster (stucco) add weather stops above exterior windows and doors.

Portland Cement Exterior Plaster (stucco): If plastic building paper or a water management layer (building wraps or housewraps) are used, provide a layer of building paper over the plastic building paper or water management layer for a bond break. If OSB board is used as sheathing under stucco, provide a drainage mat (0.375 in. or 9mm) between two layers of building paper between the OSB sheathing and stucco. The mat would allow redistribution of the moisture in both the stucco and the OSB sheathing. Use interior vapor retarders, not interior vapor barriers if moisture transmission

through the wall assembly is an anticipated problem, otherwise do not use either. rev.11/29/13

If gypsum board walls of corridor and heavy use areas are to be applied over 3/8" plywood or oriented strand board – Provide fire treatment as required by the building code for the construction type of the building used. rev4/8/08

Do not use Gypsum Board as backing for ceramic tile.

Control joints shall be one piece type.

Framing for Gypsum Board: Provide supplementary blocking for curtains and drapes at windows, for bathroom accessories and for doorstops.

Control joints shall be installed where needed but not over 30' O.C.

All adhesive and sealant products shall not contain asbestos and/or lead.

II. SECTION 093000 – TILING

Tile: Specifications and details shall be in accordance with the requirements and recommendations of the Tile Council of America.

Tile samples shall be of the size specified. Tile samples shall be submitted for all tile work.

All tile finishes and grout joints shall be non-absorbent. It is preferred that all tile be manufactured in the USA, a minimum of standard grade with matching trim pieces where required. Where required, floor tile with abrasive grain surface should be used. rev4/18/2008

Installation: Lay out floor so no tile less than one-half size occurs. Align all joints in both directions. Grout tile joints flush with faceoff tiles making a neatly finished smooth surface. Install specified grout in strict accordance with manufacturer's printed instructions.

- Tile shall be the standard wall and floor finish in restrooms. Height of the tile finish on walls shall conform to the following schedule: rev4/18/2008
    - Walls (front and side) with water closets and/or urinals, tile shall be at least full height of the plumbing fixture.

- Ceramic tile in showers shall be full height of the wall and shall be set on masonry or cement board backup.

- Other walls – tile shall be at least as tall as the toilet partitions (+/-5'-6").

Grout: seal all grout

Manufactured mortars and grouts shall contain hallmark certifying compliance with referenced standards and be recommended by tile manufacturer for specific applications. Adhesives shall be in containers labeled with Hallmark certifying compliance with referenced standards.

Floors:

Use dark grout

Contractor shall use Johnson' floor sealer, "Fortify". A minimum of two coats of sealer must be applied. Contractor shall provide for drying time of not less than thirty minutes between coats.

III. SECTION 095100 – ACOUSTICAL CEILINGS

Use exposed track for 2x4 and 2x2

All tiles flush with track – No reveal edges.

Consideration will be given for certain areas to have special ceilings. That consideration will include long term ease of maintenance, availability of replacement parts and ease of access above the ceiling. rev4/18/2008

Use tiles with recycled content, if appropriate.

Ensure fire rated tile are clipped.

Select pattern from 3 most used fissured patterns. Use common patterns for future modifications. rev4/18/2008

IV. SECTION 096400 – WOOD FLOORING

Pre-treat and provide barriers for pest control.

V. SECTION 096500- RESILIENT FLOORING

Vinyl composition tile shall be (VCT), 12" x 12" x 1/8" thick equal to or exceeding Federal Spec. SS-T-312, Type IV, composition 1 (asbestos free) and ref. ASTM F 1066 Class 2. Areas of use should be limited to kitchens, utility areas, break rooms and coffee rooms. Each building shall be limited to 1 or 2 patterns, utilizing neutral colors that blend with the carpet and other finishes throughout the building. Attic stock for tile flooring: Not less than 1 box each 22 boxes or fraction thereof, for each type, color, pattern and size installed.

Reducer Strips: Reducer strips shall be edge-butting type and not overlapping flooring. Reducer strips shall comply with ADA requirements

No vinyl composition tile in restrooms.

Contractor shall clean tiles not more than 4 days prior to dates scheduled for inspections intended to establish date of Substantial Completion in each area of Project. Clean tiles with a dust mop then wet mop with a cleaning solution recommended by manufacture.

Contractor shall use Johnson's floor finish "Complete" or Butcher's Polish Co. "Mainstay" for composition floors. Minimum of two coats of sealer must be applied and two coats of finish, for a total of four coats. Sealer must be of good quality and be compatible with the floor finish. Contractor shall provide for drying time of not less than thirty minutes between coats.

Vinyl or Rubber Base: Cove top-set with toe, straight carpet types 4" high vinyl or rubber, non-shrinking, 1/8" thick. The base is to be a neutral color blending with the floor finishes. One color base should be maintained throughout a single building. No pre-molded outside or inside corners for vinyl or rubber base. Use 120 foot rolls throughout the building. (ASTM spec. F-1861.)

VI. SECTION 096800 - CARPETING

City facilities, as public buildings, shall be designed and constructed for accessibility and use by the disabled. Refer to Division 01, General Conditions, ADA Section 013500.

Wear: Manufacturer shall guarantee that, excluding stairs, no part of the carpet wearing surface shall wear more than 10% by weight in ten years. Crush resistance should show an 85% recovery rate.

All specified carpets shall have stain resistant and soil prohibiting characteristics incorporated in the milling process of the fibers/carpets. No post-installation treatments are acceptable. Carpeting, including the backing, shall be mildew and mold resistant.

Seaming diagrams will be provided for approval prior to installation. Seams should be avoided at pivot points, across areas that receive heavy foot traffic and seams that will run directly through a doorway or opening.

Carpet Squares, minimum 26oz yarn weight per yard, are preferred for traffic areas and with modular furniture. Carpet Squares shall have a 10 year limited warranty. Carpet Square dimensions shall be 18" and 24". Provide an attic stock of one box per 120 square yards. (Assume 12 carpet squares per box.)

Carpet specifications shall be in accordance with ADA requirements. (ASTM E – 648 and ASTM E – 662.)

Use carpeting with recycled content, if appropriate.

Submittals shall include seam diagram, product data, flame resistance data and samples for Carpet Standards:

GOOD

Construction: Tufted or Woven/Textured or Level Loop
Yarn: 100% Continuous Filament Nylon
Dye Method: Solution Dyed,

OR

Gauge: 1/10th gauge. Minimum acceptable density factor is 6500.
Stitches Per Inch: 7 or more
Pile Height: Minimum .156"
Pile Weight: 26 ounces or more
Total Weight: 60 ounces or more
Primary Backing: Woven Polypropylene (if tufted)
Secondary Backing: **Must Have a Minimum** 10-year warranty against edge ravel, delamination, or zippering.

UNITARY BACKING
Width: 12 feet
Static: Permanent Static Control below 3.5 kV
Flooring Radiant Panel Test: Class 1
Wear Warranty: 10 Year Limited Wear Warranty

Installation shall be accomplished by a certified firm or installer who can demonstrate compliance with the F.C.I.B. (Floor Covering Installation Board) certification requirements and in accordance with the minimum guidelines set forth in the CRI Standard 104-1994.

BETTER

Construction: Tufted or Woven/Textured or Level Loop
Yarn: 100% Continuous Filament Nylon with Stain Removal Warranty
Dye Method: Solution Dyed

OR

Gauge: 1/8th gauge. Minimum acceptable density factor is 6500.
Stitches Per Inch: 9or more
Pile Height: Minimum .172"
Pile Weight: 30ounces or more
Total Weight: 60 ounces or more
Primary Backing: Woven Polypropylene (if tufted)
Secondary Backing: **Must Have a Minimum** 10-year non-prorated, warranty against edge ravel, delamination, or zippering.

UNITARY BACKING
Width: 12 feet
Static: Permanent Static Control below 3.5 kV
Flooring Radiant Panel Test: Class 1
Wear Warranty: 10 Year Limited Wear Warranty

Installation shall be accomplished by a certified firm or installer who can demonstrate compliance with the F.C.I.B. (Floor Covering Installation Board) certification requirements and in accordance with the minimum guidelines set forth in the CRI Standard 104-1994.

EXCELLENT

Construction: Tufted or Woven/Textured or Level Loop
Yarn: 100% Continuous Filament Nylon
Dye Method: Solution Dyed

OR

Carpet tile.
Gauge: 1/8th gauge. Minimum acceptable density factor is 6500.

Stitches Per Inch: 10 or more
Pile Height: Minimum .187"
Pile Weight: 32 ounces or more
Total Weight: 60 ounces or more
Primary Backing: Woven Polypropylene (if tufted)
Secondary Backing: **Must Have a Minimum** 10 year, non-prorated, warranty against edge ravel, delamination, and zippering, wet or dry.

UNITARY BACKING
Width: 12 feet
Static: Permanent Static Control below 3.5 kV
Flooring Radiant Panel Test: Class 1

Installation shall be accomplished by a certified firm or installer who can demonstrate compliance with the F.C.I.B. (Floor Covering Installation Board) certification requirements and in accordance with the minimum guidelines set forth in the CRI Standard 104-1994.

Provide a minimum of 5% attic stock for all broadloom carpets.

VII. SECTION 099000 – PAINTING AND COATING

PART 1 - GENERAL

Specify surface preparation, painting, and finishing of exposed interior and exterior items and surfaces.

Brands of paint, varnish and stains shall be of the highest quality, made by reputable manufacturers, having identifying labels on containers and shall ne approved by the City of Tucson. All paint materials shall be factory fresh.

Compatibility of the paint with the wall surface should be verified prior to painting.

All paints used should have a low VOC. All paint will be delivered to the site in manufacturer's labeled and sealed containers. Labels shall give manufacturer's name, brand, type, batch number, color of paint and instructions for reducing. Thin only in accordance with printed directions of manufacturer. Consideration should be given to painting occupied buildings after normal business hours or on week-ends.

All paint products and primers shall not contain lead.

All communications and data room walls shall have two coats of fire retardant paint.

NEW CONSTRUCTION
Paint all new surfaces, except pre-finished surfaces.

EXISTING CONSTRUCTION
Paint exterior stucco, ferrous and galvanized metal, trim on existing buildings. Paint interior plaster and drywall, metal doors and frames, etc., of existing buildings where affected by alterations and additions construction; extend painting of these items to entire surface of wall, ceiling, or object where deemed necessary by Architect to achieve color or finish uniformity. If authorized by Project Manager, entire interior and exterior of existing building may be painted.

Painting includes field painting exposed bare and covered pipes and ducts (including color coding), hangers, exposed steel and iron work, primed metal surfaces of mechanical and electrical equipment, and switch gear, distribution cabinets and transformers exposed on the exterior of the building.

Painting is not required on pre-finished items, finished metal surfaces, concealed surfaces, operating parts, and labels, or on electrical, mechanical, or plumbing items concealed in equipment rooms, or on concrete steps and ramps including side walls.

Pre-finished items not to be painted include the following factory-finished components: metal or plastic toilet enclosures, acoustic materials, finished mechanical and electrical equipment, light fixtures, and similar items.

Finished metal surfaces not to be painted include: anodized aluminum, stainless steel, chromium plate, and finish hardware.

SUBMITTALS

PRODUCT DATA
Manufacturer's technical information, label analysis, and application instructions for each material proposed for use. List of each material and cross-reference of the specific coating and finish system and application.

FIELD SAMPLES
On actual surfaces, require finishes of prepared samples, with full-coat finish samples on at least 25 sq. ft. of surface until required sheen, color and texture are obtained; simulate finished lighting conditions for review of in-place work. Final acceptance of colors will be from job-applied samples.

MATERIAL QUALITY

Require the manufacturer's first quality, top of the line material of the various coating types specified. Paint material containers not displaying manufacturer's product identification will not be acceptable.

MANUFACTURERS

For the purpose of establishing a level of quality, Dunn Edwards is used as a standard. Subject to compliance with requirements, other manufacturers offering products that may be incorporated in the work include but are not limited to the following:

ICI	PPG	
Frazee	Southwest	
Deer-O	Sherwin-Williams	Rev4/18/08

All Parks and Recreation Ramada's, Comfort Stations will have Dunn Edwards, City of Tucson, Parks and Recreation "Saddle Brown" or "Ultra Suede" as standard colors. In some cases, the paint can be supplied by the City of Tucson.

INTERIOR PIGMENTED LATEX SEALER

Flat sealer used as a primer over concrete and masonry under Latex flat and semi-gloss enamel, and epoxy coatings (TT-P-650):

PVA Sealer
DE - Vinylastic WlOl

INTERIOR FLAT EPOXY/POLYESTER SEALER

Flat sealer used as a primer on plastic under flat, semi-gloss, and full gloss latex finishes:

Zinsser-Bullseye 1.2.3, primer/sealer, interior/exterior water base stain killer
DE - Versaprine 42-44

LATEX BASED INTERIOR WHITE PRIMER

Latex - based primer coating used on interior gypsum drywall under a flat latex paint or a latex semi-gloss enamel (TT-P-650):

DE - Vinylastic W1Ol
ICI-PVA sealer ultra hide

INTERIOR ENAMEL UNDERCOAT

Ready mixed latex enamel for use as an undercoat over wood and hardboard under semi-glass enamel or full gloss enamel:

Frazee-Prime Plus/Interior-Exterior Primer/Sealer
DE-Unikote, W707
ICI-Ultra Hide Wood Under coater Acrylic

INTERIOR LATEX BLOCK FILLER
Acrylic based block filler for filling all voids on CMU (A-A-1500):

Frazee–Premium Block Filler Interior/Exterior
DE-BlockFil Heavy Bodied Smooth Latex Block Filler W305

Block fillers must be applied to fill <u>all</u> voids.

SYNTHETIC, LATEX METAL PRIMER
Quick-drying, rust-inhibiting primer for priming ferrous and non-ferrous metal on the exterior under flat latex paint, latex semi-gloss or latex gloss enamels.

ICI–Devoe Devflex 4020 DTM Flat Interior/Exterior Waterborne Primer/Finish
DE-Van Prime, W71 1

GALVANIZED METAL PRIMER
Primer used to prime exterior zinc-coated (galvanized) metal surfaces:

Frazee-Prime Plus
DE-Van Prime, W71 1 (Etch with Galva-Etch, GE 123)
ICI Devoe Devflex

INTERIOR FINISH PAINT MATERIAL

LATEX-BASED INTERIOR EGGSHELL PAINT
Ready-mixed, latex based paint for use as an eggshell finish over concrete and masonry surfaces, including filled concrete masonry block, mineral fiber reinforced cement panels, plaster and over prime coated gypsum drywall, ferrous metal, and zinc coated (galvanized) metal surfaces (TT-P-2 119):

ICI-Dulux Ultra Eggshell
DE-Decosheen W440
Frazee-Mirro Glide

INTERIOR SEMI-GLOSS ODORLESS LATEX ENAMEL
For use in remodeling or refurbishing projects with occupied spaces nearby - semi-gloss epoxy/polyester enamel for use over a primer on concrete, masonry (including filled concrete masonry concrete block) plaster, wood, and hardboard and both ferrous and zinc-coated (galvanized) metal and over a primer on gypsum drywall (TT-C-535):

Frazee-Microglide
DE-Ceraglaze 1P756
Frazee-Aero Guard – Water base Epoxy

MISCELLANEOUS WOOD FINISHING MATERIALS

OIL-TYPE INTERIOR WOOD STAIN
Slow penetrating oil type wood stain for general use on wood surfaces under varnishes or wax finishes:

DE-Stainseal Penetrating Oil Stain Vi 08

PASTE WOOD FILLER
Solvent based, air drying, paste type wood filler for use on open grain wood on interior wood surfaces:

Jasco Paste Wood Filler

INTERIOR LACQUER SANDING SEALER
High solids lacquer sanding sealer for use either over a stained or natural wood surface as a sealer coat for lacquer (TT-S-190)

DE-Decolac ELQ 101
Frazee-Premium Sanding Sealer

INTERIOR EGGSHELL LACQUER
High solids lacquer low sheen for use as a finish on sealed wood surfaces either stained or natural (TT-L-58):

Frazee-High Solids Clear Lacquer – Gloss-Semi- Velvet
DL-Decolac E-LQ 105

POLYURETHANE VARNISH - for use in wet areas

Clear polyurethane varnish for use on interior stained or natural-finished woodwork:

DE-Decothane 1P628

EXTERIOR PAINT MATERIALS

EXTERIOR GLOSS ENAMEL

Exterior Gloss enamel for use over a primer and undercoat on interior plaster surfaces, wood, and hardboard and ferrous and zinc-coated metal surfaces:

DE - Permagloss Acrylic Gloss W960
Frazee- MicroGlide – Gloss- Semi – Low Sheen

EXTERIOR ACRYLIC LATEX FLAT

100% Acrylic Latex flat for use on primed concrete, masonry (including filled concrete masonry block) plaster, wood, both ferrous and zinc coated (galvanized) metals and over exterior gypsum drywall (TT-P- 1 9C):

Frazee-Duratec
DL-Evershield W70 1

EXTERIOR WATER REPELLENT

Acrylic micro emulsions and siloxane based water sealant and repellent containing not less than 10% solids for use as a sealer either clear or pigmented over concrete masonry units or other masonry (SS-W-1 102):

DL-OKON W2

All water repellents and water stains must be applied in such manner to meet manufactures' five year written warranty requirements.

EXTERIOR PAINT SCHEDULE

PLASTER (STUCCO)

EFF Stop (W709) Acrylic Masonry Sealer
Acrylic latex flat two coats
Two coats, TT-P- 1 9C acrylic latex flat

CMU (CLEAR WATER SEALER)

Clear and acrylic water sealant and repellent, provide 5 year written warranty.
Two flood coats, SS-W-1 10 C Clear Water Repellent

FERROUS METAL

Frazee–Micro Glide
W960 enamel gloss, 2 coats over primer
One coat, TTP-645 rust in-hibitive primer

ZINC-COATED METAL

Frazee–Mirro Glide
W960 enamel gloss 2 coats over primer
One coat, TTP-64 1 galvanized metal primer

INTERIOR PAINT SCHEDULE

GENERAL

Provide the following paint systems for the various substrates, as indicated.

CMU

Acrylic latex eggshell 2 coats over primer and filler
One coat - A-A-1500 Acrylic block filler
One coat - TT-P650 pigmented latex sealer
Two coats - TT-P-2 119 Acrylic eggshell
Frazee Mirro Glide

GYPSUM DRYWALL (WET AREAS)

Epoxy/polyester semi-gloss 2 coats over primer
One coat - TT-P-650 pigmented latex wall sealer
Two coats - TT-C-535 epoxy/polyester semi-gloss

GYPSUM DRYWALL

Acrylic latex eggshell, 2 coats over primer
One coat - TT-P650, pigmented latex sealer
Two coats - TT-C-535 epoxy/polyester semi-gloss

GYPSUM DRYWALL

Acrylic latex eggshell, 2 coats over primer
One coat - TT-P-650, pigmented latex sealer
Two coats - TT-P-2 119 acrylic eggshell
(Frazee Mirro Glide – Satin Glide II)

FERROUS METAL
Two coats TT-P1511 Semi-Gloss Acrylic
One coat, W7 11 rust inhibitive primer
(Devoe – Devflex 4208)

ZINC-COATED METAL
Two coats TT-P 1511 Semi-Gloss Acrylic
One coat - W7 11 galvanized metal primer
(Devflex 4208)

MILL WORK (PAINTED)
Two coats TT-P1S1 1 Semi-gloss Acrylic (Frazee Mirro Glide – Satin Glide II)
One coat, W707 Latex enamel undercoat

MILL WORK (NATURAL FINISH)
Lacquer finish eggshell, two coats over sealer
One-coat - TT-S-190 lacquer sanding sealer
Two coats - TT-L-58 eggshell lacquer

MILLWORK (NATURAL FINISH) WET AREAS
Three costs Polyurethane semi-gloss
When surfaces or finishes are not mentioned in the above schedule, such as gloss enamel or catalytic epoxy finishes, Architect shall specify the appropriate products.

VIII. SECTION099100 – WALL COVERINGS

PART 1 - GENERAL

Wall coverings other than paint are usually discouraged. Please obtain approval from the City of Tucson project manager.

Should wall coverings be approved; color and pattern continuity should be maintained throughout the building, utilizing only one or two wall coverings. Fabric wall coverings should only be used in

areas such as conference rooms, reception / common areas or where a tackable surface may be required. In high usage areas or an area which requires more resilient wall covering, such as halls, coffee or break rooms, a vinyl wall covering should be utilized.

Wall coverings durability and appearance retention shall meet Voluntary Standard TS 198 and meet Federal Specification CCC V.V. 408, Type II Medium Duty or Type III Heavy Duty

Adhesives, primers and sealers shall be as recommended by the fabric manufacturer, and strippable type.

TABLE OF CONTENTS

I. SECTION 101416 - PLAQUES

II. SECTION 101420 - SIGNAGE

III. SECTION 105100 – LOCKERS

IV. SECTION 102800 - TOILET, BATH, &LAUNDRY ACCESSORIES

V. SECTION 10300 – ACCESS FLOORS

GENERAL:

Operable Partitions – use for acoustical separation. The STC shall equal that of surrounding walls and/or partitions – close the space at the top of the partition and the underside of the floor deck (if at a second floor) with STC equivalent partition.

Exterior Sun Control Devices – avoid automatic controlled devices – avoid creating bird rookeries on horizontal surfaces.

Flag and flag pole – contact the City of Tucson project manager if a flag and flag pole is appropriate for the project.

Drinking Fountains – coordinate with ADA requirements and Division 22 PLUMBING – use "high-low" configuration and operate with chilled water.

I. SECTION 101416 PLAQUES

This document is part of Building Design and Maintenance Standards for City of Tucson construction projects. These Standards were prepared by and are provided to City of Tucson contracted designers and contractors by the Architecture & Engineering Division of the General Services Department. These "standards" are meant to provide uniformity in design and ease of installation and maintenance by City of Tucson's Facilities Maintenance Division's personnel. Please contact the Architecture & Engineering Administrator (791-5111 x311) should you have any questions.

DEDICATION OF A NEW BUILDING:

An appropriately worded and designed plaque must be placed either as a cornerstone or be mounted to the wall at the main entrance to the building (interior or exterior). The following information should be included on the plaque:

1. Building name
2. Honoree's name and title
3. Brief description of the honoree, to include:
   - Beginning date of service, dates of service or length of service with the City, if applicable
   - Name of honoree's department and or position, if applicable
   - Description of the honor or reason for the honor
4. Year of occupancy
5. Options to include use of a graphic bas-relief 3D sculptured portrait, raised etched photo of the honoree or current City of Tucson logo

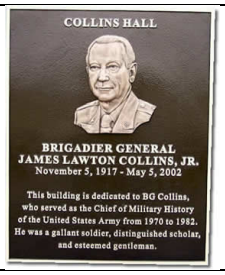	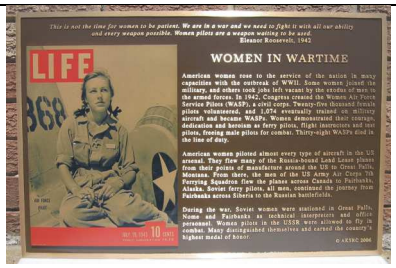	
Bas-relief 3D sculptured portrait	***Raised etched photo***	***Logo (example)***

DEDICATION OF AN EXISTING BUILDING:

An appropriately worded and designed plaque may be placed either as a cornerstone or at the main entrance to the building (interior or exterior), giving the names and pertinent information. The following information should be included on the plaque:

1. Building name
2. Dedication date
3. Honoree's name and title
4. Brief description of the honoree, to include:
   - Beginning date of service, dates of service or length of service with the City, if applicable
   - Name of honoree's department and or position, if applicable
   - Provide a description of the honor or reason for the honor
5. Options to include use of a graphic bas-relief 3D sculptured portrait, raised etched photo of the honoree or current City of Tucson logo.

PLAQUE SIZE:

The plaque size should be determined by the dedication committee in response to the location, building materials to which the plaque is mounted, visibility, and relationship to other signage on the project.

CAST PLAQUE DESIGN:

Border: Single line border with satin finish
Type Face: Times New Roman.
Background: Dark Bronze or Black painted on pebble, leatherette, or plain texture.
Thickness: Three Eighths to Three Fourths inch, depending on the size of the plaque.
Raised letters are required for the visually impaired, even though there are no ADA requirements for dedication plaques.

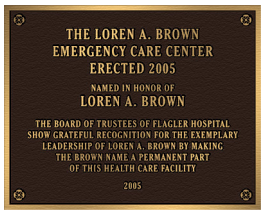

Single line border with satin finish

MONUMENT MOUNT:

Plaque to be attached to 4”x4” square steel tube post with a 4”x4” square steel tube at a 30º angle welded to the top of the post. The bottom of the plaque must be 32” above the finished walkway. The base to be embedded in 18’ diameter by 36” deep concrete, 1” below finished grade. The post must be painted to match the background color of the plaque.

METHODS OF ATTACHMENT TO WALLS:

Bosses and Studs: On brick, stone, or masonry.

Rosettes and Toggle Bolts: On concrete block, hollow tile, drywall, plaster or wood paneling over stud construction. Use "snake eye" vandal proof bolts.

Allow for thermal expansion and contraction of the plaque for exterior attachments.
Use brass or other corrosion resistant attachments.

ART WORK DEDICATION PLAQUES:

Artwork should be identified with a permanent plaque. Brass plaques for artwork should be as follows for all new buildings and major remodels (artwork as required for occupancy permits):

- 6 1/2" X 9" with a beveled edge.
- Raised letters
- Exposed brass screw heads are O.K.
- Can be post mounted with a 2"x2" angled top post embedded in 8"x 8"x 8" concrete, or embedded in the base of the art work, or attached to a wall per **METHODS OF ATTACHMENT TO WALLS** (see above).

State: The title of the artwork (bold)
Year in which completed
Where all the artist's work is located in the project (if multiple pieces)
Artist's name (bold)
Engineer's name (if any) (bold)
Commissioned by (City of Tucson, usually)
Coordinated by (Tucson-Pima Arts Council, usually)

PERMITS: Obtain all sign permits required by the City of Tucson Development Services Department. Plaque material, size, method of mounting the plaque, and the base material of the wall to which the plaque will be mounted will be some of the required information of this permit. Pay all permit fees which may be required for the installation of the plaque.

METHOD OF PROCUREMENT: Contact the City of Tucson Procurement Department, Purchasing Division – Commodity Assignments, Contract Officer in charge of "Signage". There will be at least three vendors from which to order Cast Bronze Plaques and Artwork plaques.

II. SECTION 101420 SIGNAGE

City facilities, as public buildings, shall be designed and constructed for accessibility and use by the disabled. Refer to Division 01, General Conditions, ADA Section 013500.

Interior and exterior signage shall be provided to identify parking, entrances, permanent rooms, spaces, means of egress, areas of refuge, and assistive listening. Sign package shall include information and directional signage along with door numbers attached to each door. Contact the City Locksmith at 791-3141 X 330 for the door number requirements.

Durability requirements: Flexibility to accommodate changes and additions to the sign system should be considered by the designer prior to the selection of materials, graphic techniques and mounting methods to be used.

Readability: Letters should be large enough to read from a distance of 50 feet, depending on the application and usage. Color between background and lettering should have strong contrast. Colors in signage system should also relate harmoniously with the pallet of colors selected for the building and its environment.

Some signage may be fabricated through the City of Tucson Transportation Department, Traffic Maintenance Sign-Paint Shop. Please coordinate with the City of Tucson project manager for which signs might be able to be provided.

Address Signs: Address signs shall be for all new buildings and major remodels (a requirement for occupancy permits):

The aesthetic of the address sign should be designed to integrate and harmonize with the building design. “Times Roman” font is preferred.
The following is Tucson Fire Department’s requirements for reading the address from the street:
Buildings < 50 feet from the curb require 12” high numbers.
Buildings > 50 feet from the curb require 15” high numbers. rev4/18/08

Emergency Exit Plans: Emergency Exit plans shall be provided to show the safe route for exiting the building from every room in the building not having a direct exit door to the exterior. The Architect/Engineering firm is to supply the General Contractor with a floor plan for each room showing the shortest exit route from that room to a safe area on the exterior of the building. These plans shall be part of the sign package for the building and shall incorporate the style, materials, textures and colors of the sign package. The emergency exit plans shall be wall mounted near the

major exit of each room. It is not necessary to always have North at the top of the sign, the sign should read in the direction of the sign location as it is being viewed. rev4/18/08

SECTION 105100 LOCKERS

City facilities, as public buildings, shall be designed and constructed for accessibility and use by the disabled. Refer to Division 01, General Conditions, ADA Section 013500.

Provide the required number and type of each locker to comply with ADA.

Use all metal. Wood or wood particle board materials are not acceptable.

Lockers shall be the vented style.

It is preferred that Lockers shall not be mounted on wood or concrete curbs. This will limit future flexibility. rev4/18/08

Verify the locking requirements with the City of Tucson project manager. Typically a padlock type is preferred.

Verify the size of the lockers required with the City of Tucson project manager.

SECTION 102800 TOILET, BATH, &LAUNDRY ACCESSORIES

All entries to restrooms shall be designed with privacy in mind. Layout of restrooms as it pertains to mirror locations and sight lines are critical for privacy.

City facilities, as public buildings, shall be designed and constructed for accessibility and use by the disabled. Refer to Division 01, General Conditions, ADA Section 013500.

1) Comply with ADA mounting height and clearance requirements.

2) Paper towel dispenser:
   Georgia-Pacific Vista Hygienic Push Paddle Roll Paper Towel Dispenser #54338, will be supplied by the City of Tucson. (Note this fixture projects 12.750” from the wall – provide ADA clearances accordingly plus clearances for a free standing trash receptacle.) This towel dispenser will require a cane detection device below it as it extends beyond the maximum (4”) projection to comply with ADA. In lieu of cane detection, a permanently mounted trash receptacle mounted below the dispenser or the dispenser could be mounted in an alcove.
   rev11/29/2013

3) Toilet paper dispenser:

Bobrick B-388 or B-288

4) Soap dispenser:
   800 ml Box dispensers (GoJo manufacturer) hand & body cleanser, will be supplied by the City of Tucson. (Note: These fixtures are not in-sink top dispensers, they will be wall surface or mirror surface mounted.)

5) Sanitary napkin disposal:
   Bobrick B-354 and/or B-353 and/or B-270

6) Feminine napkin dispenser:
   Bobrick B-352 .25 cent operation

7) Mirrors:
   a) Mirror size shall be 18X36 (one for each sink). Use a fixed tilt when required by A.D.A.
   b) Set with theft proof mounting
   c) Set glass in frames without putty, with snap-in stops or applied stops.
   d) Bottom of mirrors shall not butt against backsplashes (if possible, provide a minimum 4" clearance between backsplash and mirror).

8) Surface-mounted diaper changing station:
   Bobrick B-2210
   Koala Care KB 100

Toilet Compartments:

- Brushed Stainless Steel (for low vandalism areas)
- Stippled Stainless Steel (for high public use, industrial areas, high vandalism areas)
- Enameled Steel
- Phenolic Resin
- Solid Plastic

Plastic laminate is not acceptable

Toilet partitions shall be floor mounted in high public use areas. Ceiling mounted is preferred in low public areas for ease of cleaning maintenance.

Urinal screens shall be the same material as the toilet partitions and shall be cantilevered off the wall – maximum 18" projection.

Toilet Room Accessories:

Where appropriate, provide baby changing stations in both male and female public restrooms, and in family/unisex restrooms.

Multi-use restrooms (i.e., family/unisex restrooms) intended primarily to serve as the wheelchair accessible restroom for a facility should be equipped with toilet fixtures with automatic flush valves, lavatory sink faucet, mirror, soap dispenser, paper towel dispenser and trash receptacle.

V. SECTION 10300 – ACCESS FLOORS

Access floors shall meet code/ADA requirements. If a floor covering is to be installed, carpet squares are the preferred finish material. Access floors must be designed and sealed with structural calculations provided by an Arizona Structural Registrant.

TABLE OF CONTENTS

I. SECTION 114000 – FOOD SERVICE EQUIPMENT

GENERAL

In general, review specialized equipment with the client Department through the City of Tucson project manager.

Examples: Athletic, recreational equipment – Parks and Recreation Department
Shooting Range Equipment – Tucson Police Department. rev3/15/08

SECTION 114000 – FOOD SERVICE EQUIPMENT

Note: The following is for commercial kitchen applications not break rooms, staff areas, coffee counters etc. All City of Tucson commercial kitchens should also be licensed with the Pima County Health Code and comply with their requirements for foodservice / prep areas. Refer directly to the Pima County Health Code for specific requirements for hand sinks, hoods, food storage, etc. rev4/17/08

KITCHEN EQUIPMENT

Provide kitchen sinks with 3 compartments where possible: sinks shall have 28” x 20” x 14” compartments with 2 drain boards not less than 24”.

Provide shut off valves to all water lines in sinks, dish machine and garbage disposals.

Provide indirect waste lines to dishwasher, prep sink, and final rinse bowl of three-compartment sink.

Faucets shall be the same or similar to those manufactured by Chicago Faucets.

Provide a heat booster to the dishwasher. Final rinse must reach 180 degrees.

If floor is to be replaced, adjust equipment as required to meet proper operation heights.

Sneeze guards, where required, shall be made of tempered glass.

Fire extinguishers shall be located in the kitchen design and included in the cost of the construction.

The dish machine hood shall be sized and mounted appropriately to draw vapors from the raised doors.

Exhaust Hood over open flame equipment shall be sized to meet the Uniform Fire Code and Pima County Health Code requirements.

Freezers and refrigerators should be on dedicated electrical circuits.

At least two dedicated circuits should remain unassigned to accommodate emergency service equipment.

Provide protective shielding as required on all light fixtures in all preparation, service, display and storage areas.

SERVICE COUNTER

Service counter shall meet current ADA/DOJ height requirements.

Service counter equipment should be installed to be flush with the service counter height.

KITCHEN DESIGN REQUIREMENTS

Lockers should be provided for staff where there are six (6) or more employees.

Where ever possible, walls shall be easily cleanable surface. Walls must be considered a “smooth surface.”

At all wet/dirty areas, install 4” x 4” smooth/un-textured ceramic wall tile.

Provide a 40” minimum width opening or door opening at any kitchen entrance.

Depress concrete slabs where possible to accommodate different flooring thicknesses so that all flooring surfaces are flush without transition strips.

General electric circuits should be 20 amps unless otherwise required by specific equipment.

Floors shall have non-slip surface. rev4/17/08

Provide at least a three-foot wide path in all areas.

Service areas shall have a five foot clear turning radius.

Provide overhead clearance to accommodate semi trucks at service areas.

Provide a hand sink with a hot and cold mixing faucet in the kitchen

Provide 1/12 or less sloped ramps in lieu of stairs in all service areas (refer to ADA/DOJ ramp and handrail requirements).

Provide a 30” high dock (with dock Bumpers) at service areas. Use dock levelers if budget allows.

RESTROOMS FOR FOOD SERVICE EMPLOYEES

Restroom sinks must have hot and cold water mixing faucets.

Restroom exhaust and lighting must be automatically activated. (Motion activated switches.)

Restroom door must have a closer.

Provide soap and towel dispensers at hand sink in the kitchen and restroom sinks. (See Division10 – Specialties for current soap and towel dispenser standards.) rev11/29/13

Provide mop storage closet with a floor sink or service sink for food service employees, separate from janitor’s closet.

TABLE OF CONTENTS

I. SECTION – 120010 WINDOW TREATMENTS

II. SECTION – 121000 SYSTEMS FURNITURE

III. SECTION 122000 FREE STANDING CONVENTIONAL FURNITURE

IV. SECTION – 127000 SPACE STANDARDS

I. SECTION – 120010 TREATMENTS

Window coverings are used to enhance the office environment and provide light control at exterior windows. 1" Mini-blinds and perforated mini-blinds in various shade coefficients are preferred over draperies due to their ease of maintenance and low flammability of the materials. Color and pattern continuity throughout a single building is recommended.

Mini Blinds

Narrow 1" wide aluminum slat type with "invisible" type ladders, all steel parts shall be treated at the factory with a corrosion resistant plating treatment. Provide manufacturer's standard paint finish applied over a catalytic undercoat and baked at a high temperature.

Perforated mini blinds have the same description as the mini blinds above, but have perforations at varying densities for varying shade coefficients. The shade coefficients can be selected to provide light control due to sun exposure on widows and/or building orientation.

II. SECTION – 121000 SYSTEMS FURNITURE

The use of modular systems furniture is encouraged wherever the privacy of an enclosed office is not critical to job function. Open office planning creates an atmosphere of shared daylight and team interaction. Systems furniture is easily reconfigured to meet changing organizational needs. A limited number of standard workstation sizes and componentry should be applied to support typical job functions, equity among staff and efficient utilization of space.

Manufacturer: manufacturer, style, colors and finishes should be specified to coordinate with any existing City of Tucson contracts already in place to control inventory and maximize furniture usage among City buildings.

III. SECTION 122000 FREE STANDING CONVENTIONAL FURNITURE

For each new facility, a standard for conventional furniture should be developed for each functional area.

Any existing City of Tucson contracts for conventional furniture should be utilized wherever possible. Suppliers of this furniture should be asked to provide samples and cut sheets showing furniture in their line which has been purchased for other City of Tucson buildings. If functionality can be achieved, previously purchased furniture and fabric selections are encouraged for style consistency and standardization among City buildings.

All conventional furniture must be commercial quality, which is intended for commercial use. Fabric on upholstered furniture must meet flammability testing required by code. Wear ability of the fabric should be considered in relation to the intended use of the upholstered item. Furniture and fabrics must be warranted by the manufacturer against defects for a minimum of five years.

IV. SECTION – 127000 SPACE STANDARDS

The City of Tucson has established Space Standards to serve as a management-approved guideline for space allocation in City facilities. The purpose of space standards is to enable the City of Tucson to provide office space in a well organized and cost effective manner, creating work environments that meet the needs for productivity, function, flexibility and aesthetics. The guidelines presented here are based on the standardization of space requirements by job function and support needs.

Space Guidelines: The space guidelines include only the actual square footage of a private office or individual workstation. Circulation, aisle and access space is not included in the individual categories. The actual square footage required for circulation should be added in the planning phase of each project as a group or department.

Maximum Guidelines: The standards assigned are to be utilized as maximum guidelines for individual work areas. Project conditions, architectural constraints, and/or existing conditions may require the standard allocations to adjust per project.

ADA requirement: City facilities, as public buildings, shall be designed and constructed for accessibility and use by the disabled. Refer to Division 01, General Conditions, ADA Section 013500.

6x6 OWS = TYPICAL CLERK/TYPIST STATION

Open Workstation Systems 6x6 OWS

6x6 48 SF Net
36 SF Usable

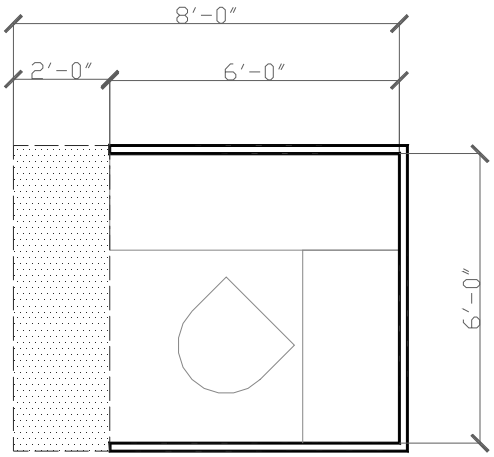

General Services / Architecture & Engineering scale ¼" = 1'-0"

6x8 OWS = TYPICAL DATA ENTRY

Open Workstation Systems 6x8 OWS

6x8 64 SF Net
48 SF Usable

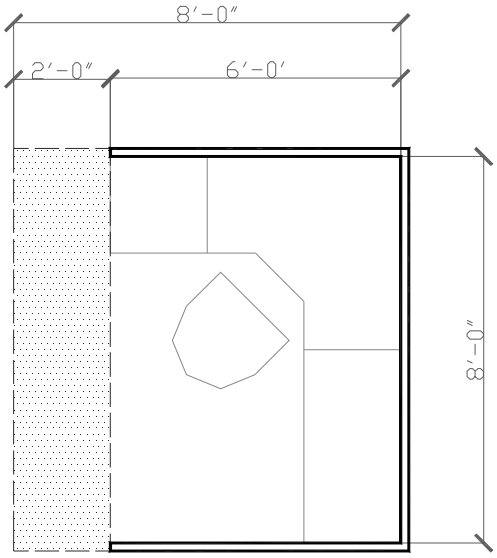

8X8 OWS= TYPICAL TECH. SUPPORT,
TYPICAL CLERICAL/RECEPTIONIST

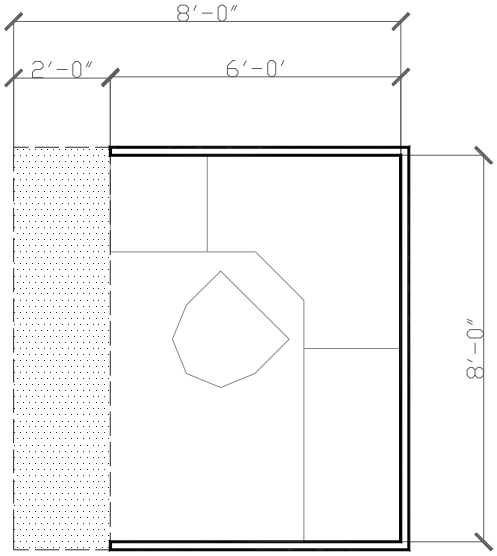

Open Workstation Systems 8x8 OWS

8x8	80 SF Net 64 SF Usable

8x10 OWS = TYPICAL ADMINISTRATIVE ASSISTANT

Open Workstation Systems 8x10 OWS

8x10 96 SF Net
80 SF Usable

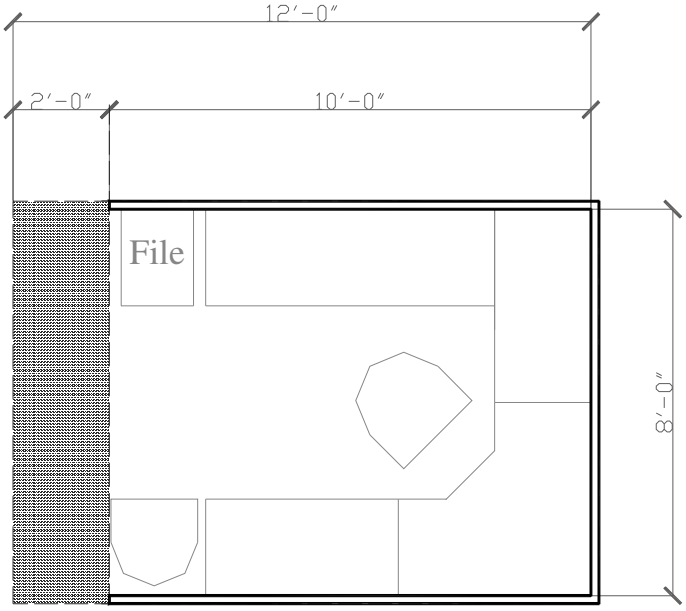

8x12 OWS = TYPICAL TECHNICAL STATION
TYPICAL ADMINISTRATIVE ASSISTANT

Open Workstation Systems 8x12 OWS

8x12 112 SF Net
96 SF Usable

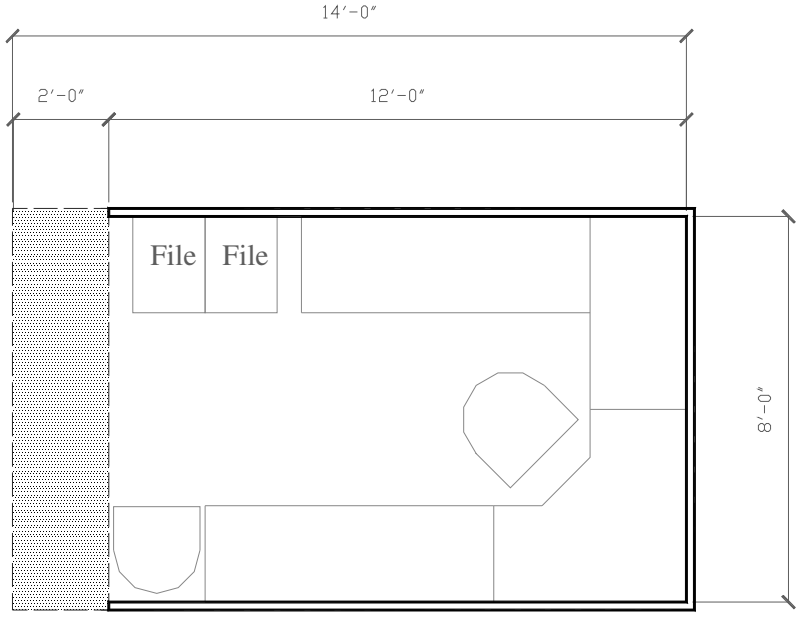

10x10 OWS = TYPICAL TECHNICAL STATION

Open Workstation Systems
10x10OWS

10x10 120 SF Net
100 SF Usable

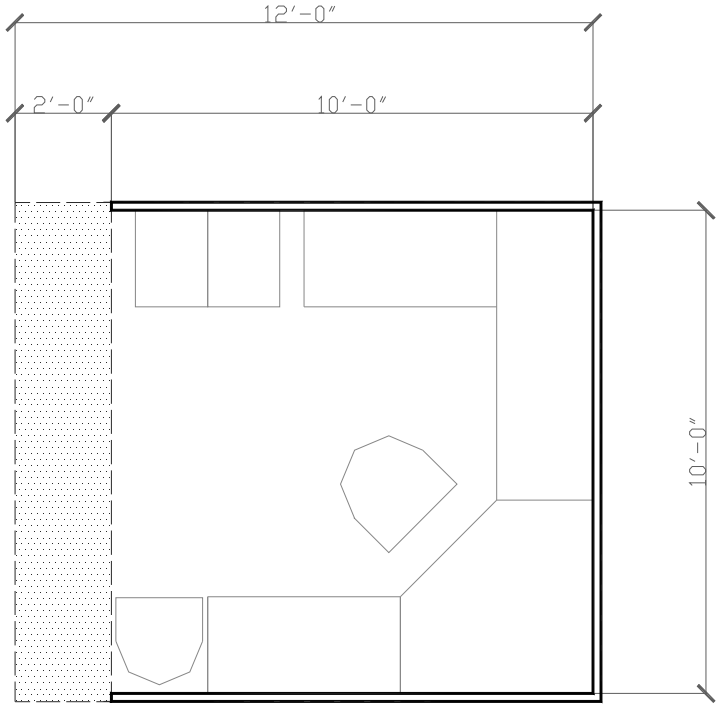

City of Tucson 10x10 OWS

General Services / Architecture & Engineering scale ¼" = 1'-0"

10x12 OWS = TYPICAL MANAGER STATION

Open Workstation Systems 10X12 OWS

12x12 140 SF Net
120 SF Usable

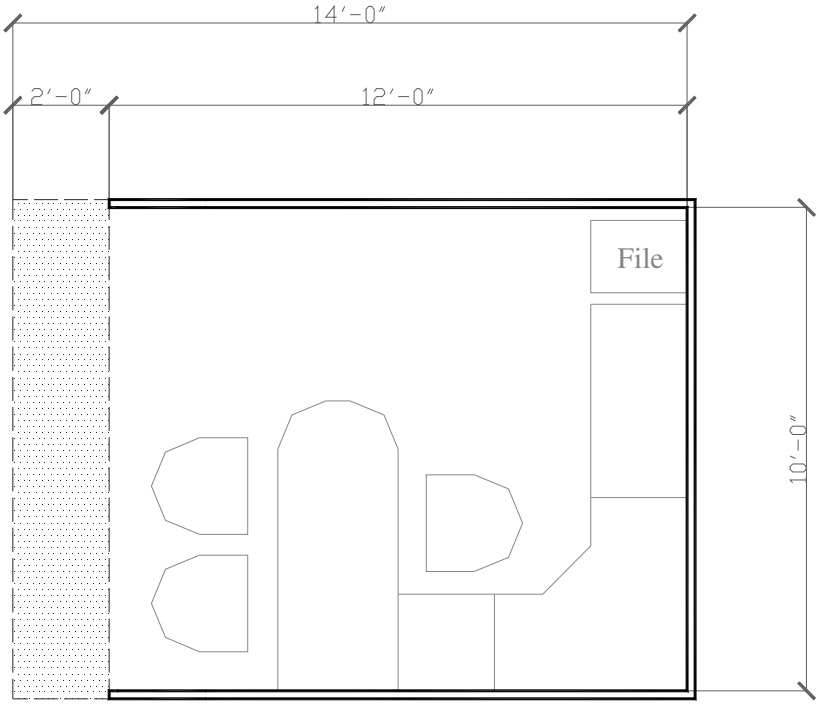

12x14 OWS = TYPCIAL ASST. DIVISION ADMINISTATION or PROJECT MANAGER

Open Workstation systems 12 x 14 OWS

12 x 14 192 SF Net
168 SF Usable

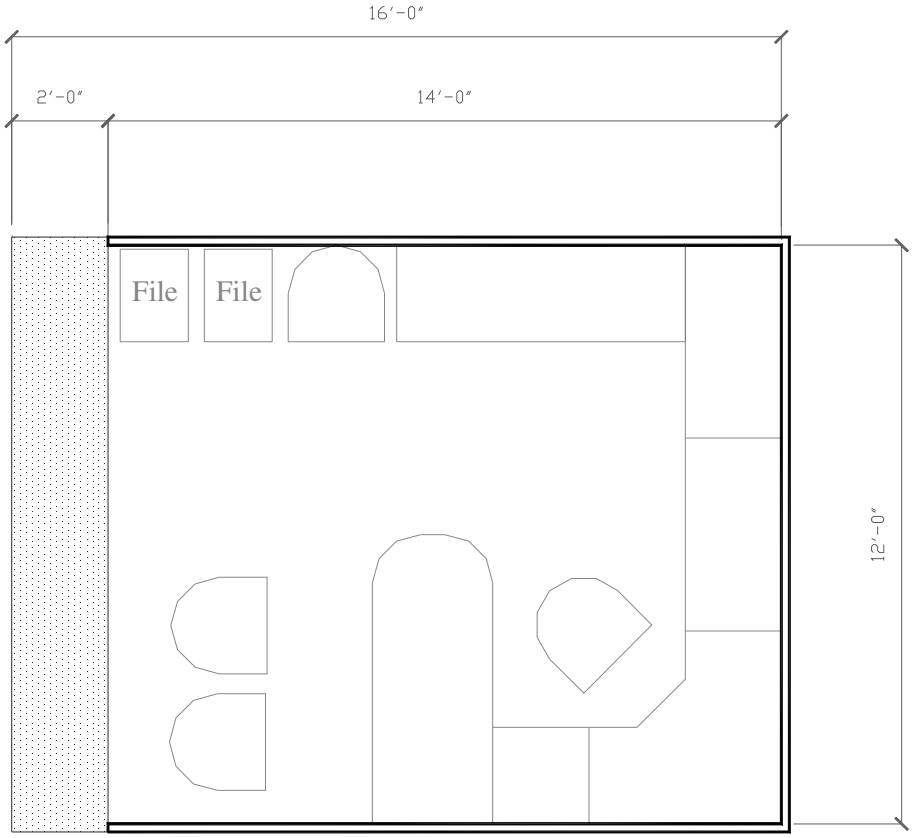

6x6 OAS = TYPICAL CLERK/TYPIST STATION

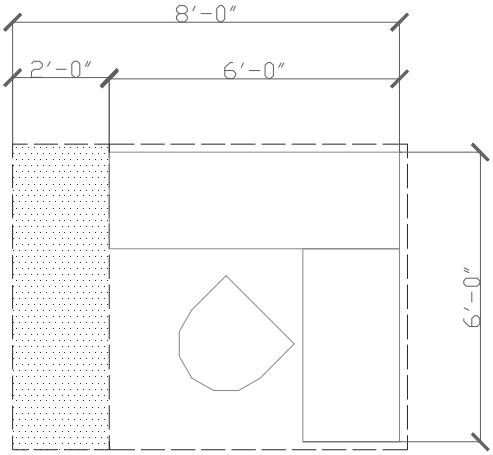

Open Area System	6 x 6 OAS
6 x 6	48 SF Net 36 SF Usable

6x8 OAS = TYPICAL DATA ENTRY

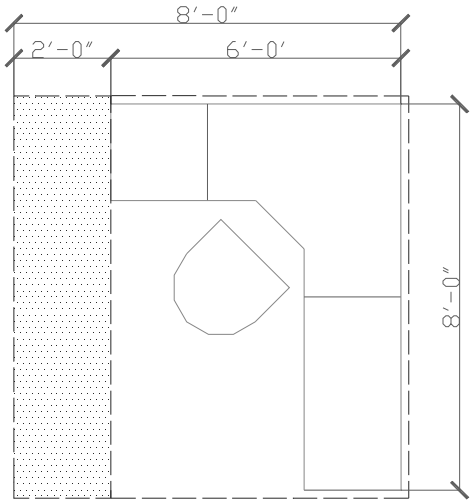

Open Area Systems	6 x 6 OAS
6 x 6	48 SF Net 36 SF Usable

8X8 OAS = TYPICAL TECH. SUPPORT STATION
CLERICAL, RECEPTIONIST

Open Area System	8 x 8 OAS
8 x 8	80 SF Net 64 SF Usable

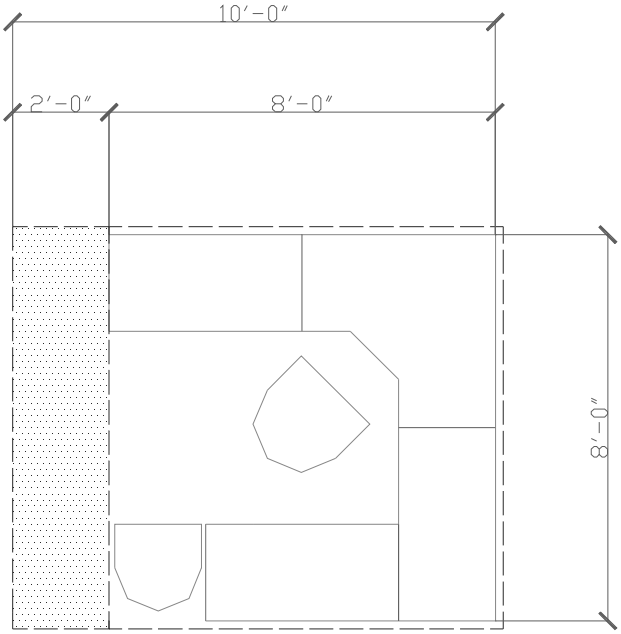

8x10 OAS = TYPICAL ADMINISTRATIVE ASSISTANT

Open Area System	8 x 10 OAS
8 x 10	100 SF Net 80 SF Usable

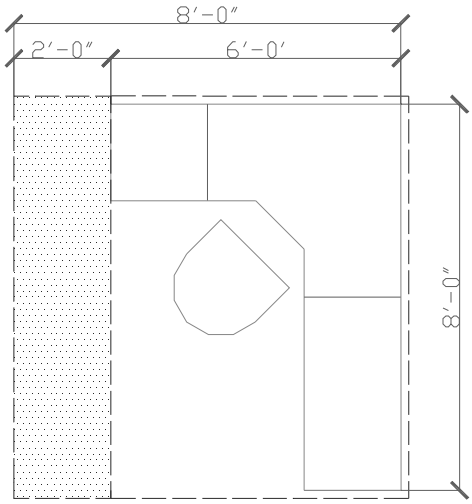

10x10 OAS = TYPICAL TECHNICAL STATION
TYPICAL ADMINISTRATION STATION

Open Area System	10 x 10 OAS
10x 10	10 SF Net 80 SF Usable

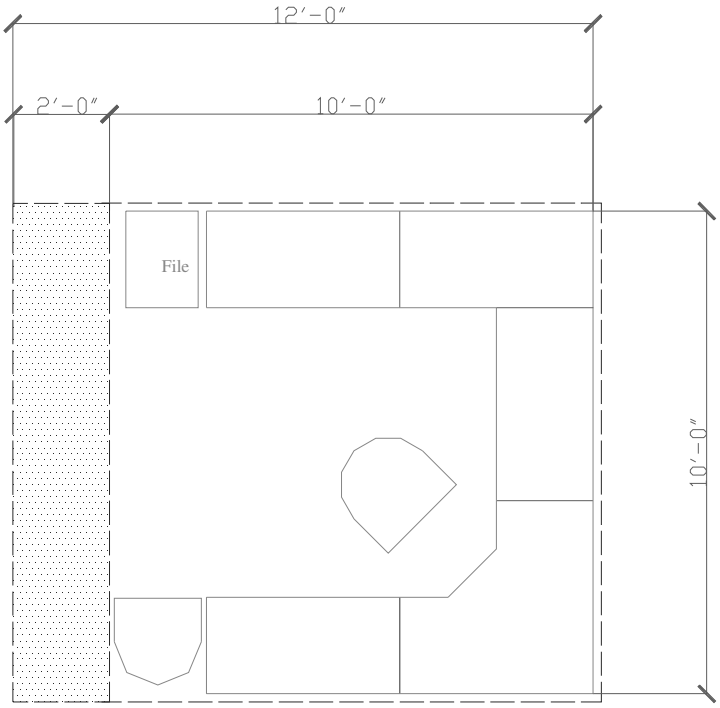

10x12 PO = TYPICAL MANAGER OFFICE

Private Office	10 x 12 PO
10x 12	120 SF Usable

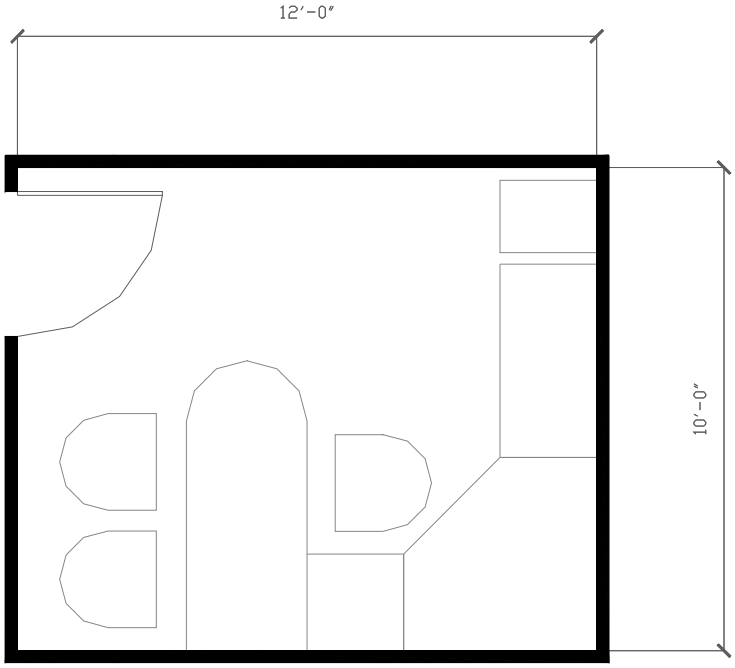

12x14 PO = TYPICAL PROJECT MMANAGER OFFICE

Private Office	12 x 14 PO
12x 14	168 SF Usable

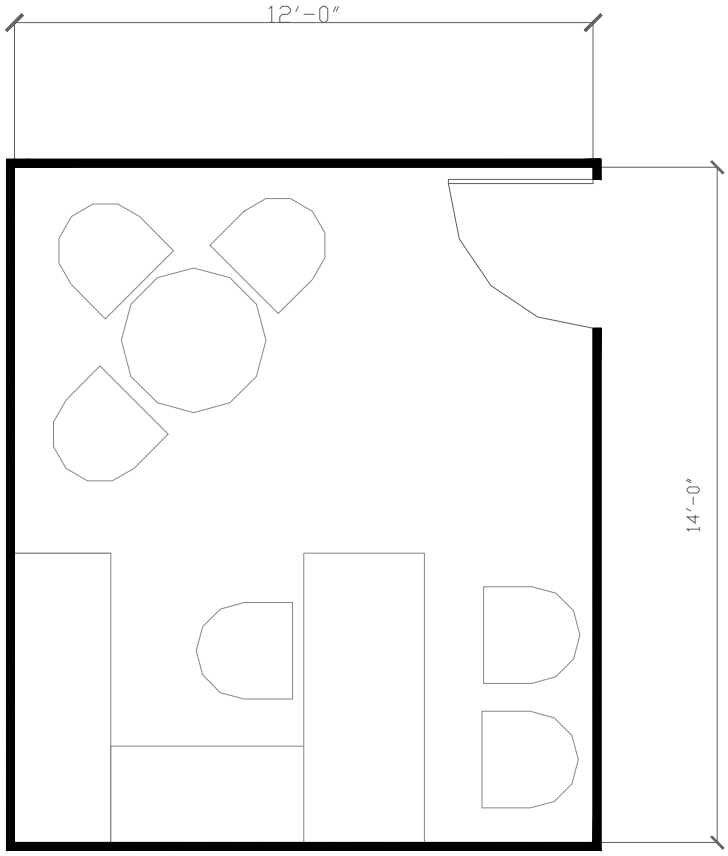

14x14 PO = TYPICAL ASST. TO ASST. DEPARTMENT HEAD or ASST. DIVISION ADMIN. OFFICE

Private Office	14 x 14 PO
14x 14	196 SF Usable

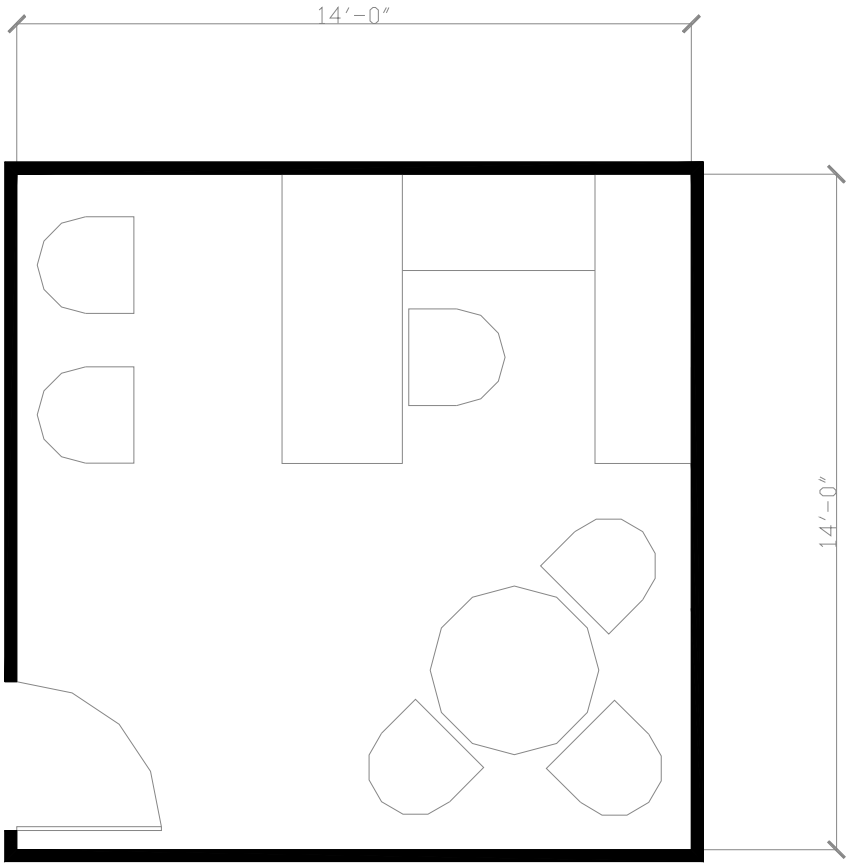

General Services / Architecture & Engineering scale ¼" = 1'-0"

14x18 PO = TYPICAL HEAD OF DIVISION OFFICE
or ASST. TO DEPARTMENT HEAD

Private Office	14 x 18 PO
14x 18	252SF Usable

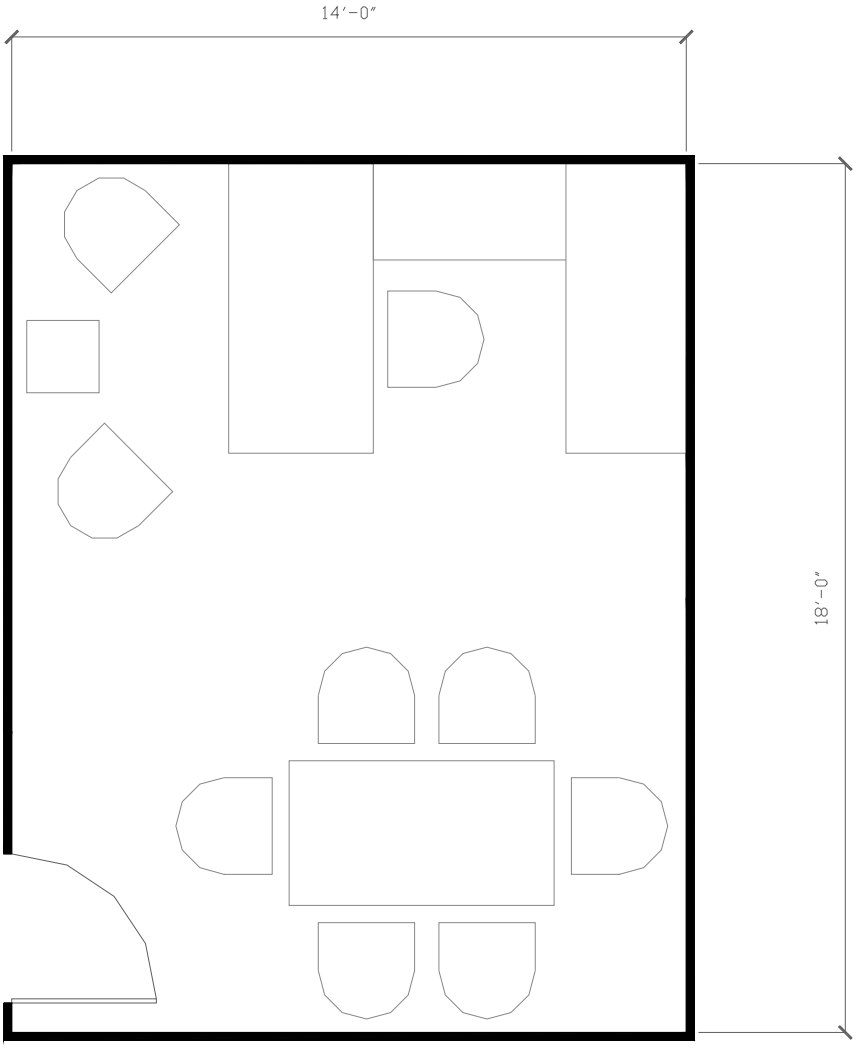

General Services / Architecture & Engineering scale ¼" = 1'-0"

14x20 PO = TYPICAL HEAD OF DEPARTMENT OFFICE

Private Office	14 x 20 PO
14x20	280SF Usable

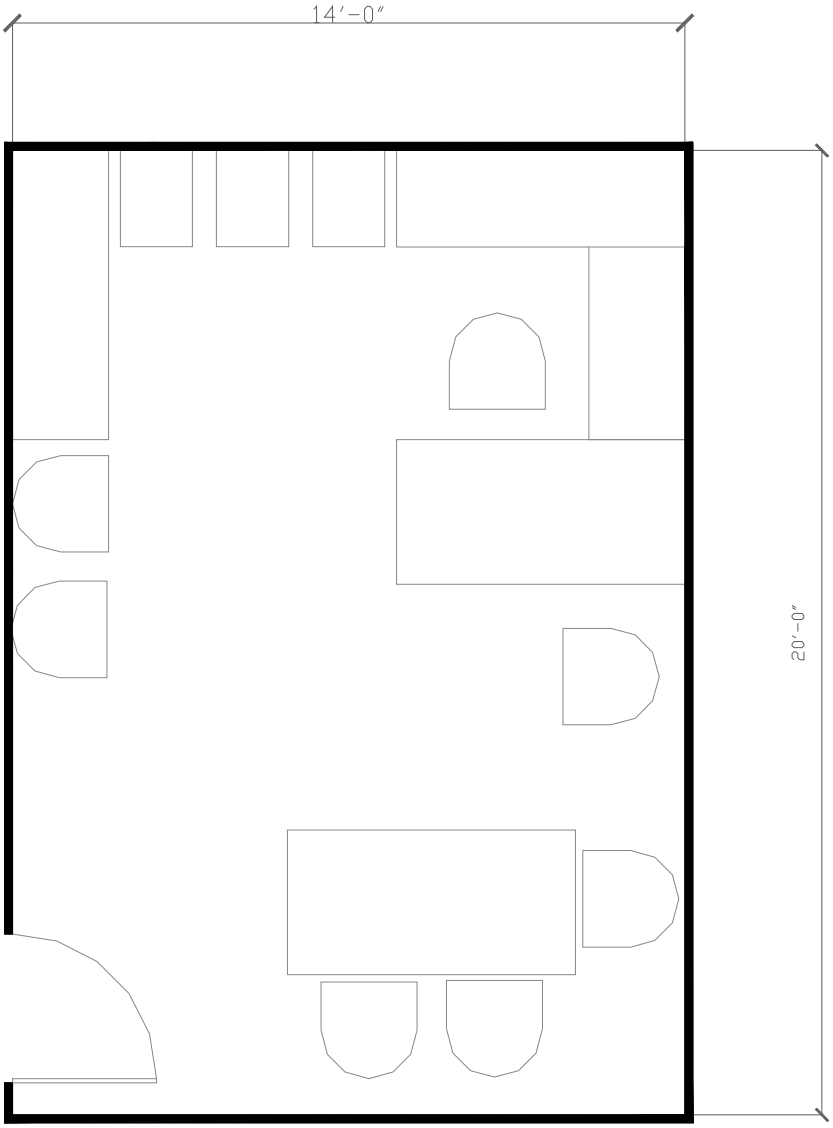

General Services / Architecture & Engineering scale ¼" = 1'-0"

10x10 CR = TYPICAL SMALL CONFERENCE ROOM

CONFERENCE ROOM 10 x10 CR

10x10 100SF Usable

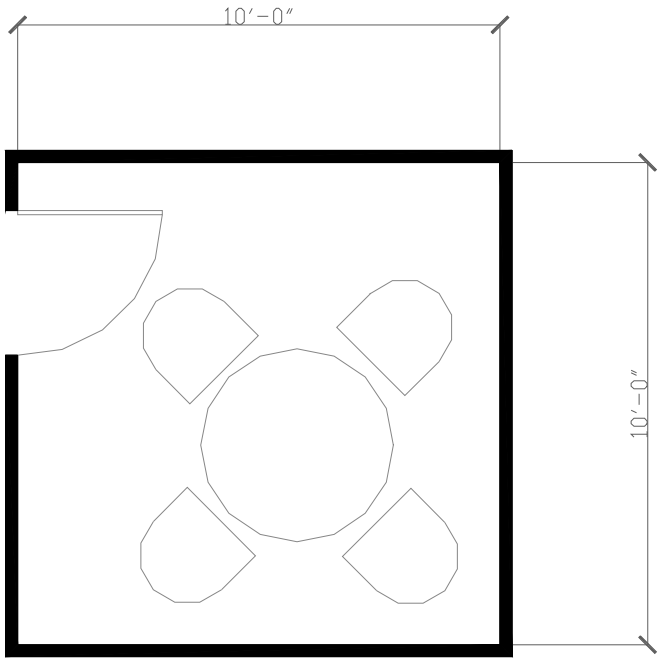

General Services / Architecture & Engineering scale ¼” = 1’-0”

10x18 CR = TYPICAL MEDIUM CONFERENCE ROOM

CONFERENCE ROOM 10 x18 CR

10x18 180SF Usable

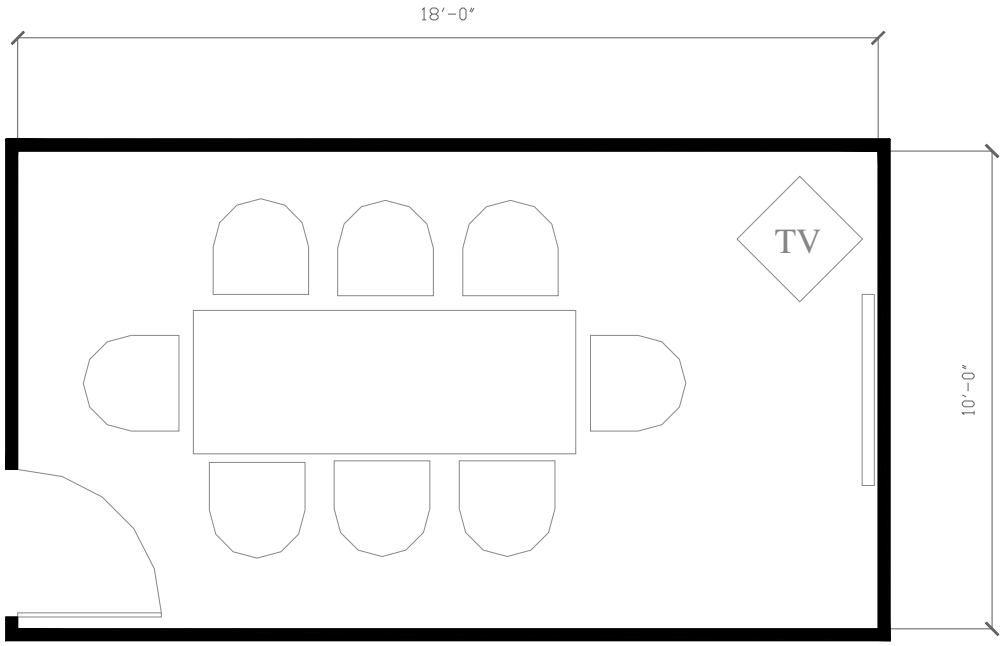

15x20 CR = TYPICAL LARGE CONFERENCE ROOM

CONFERENCE ROOM 15 x 20 CR

15 x 20 300SF Usable
Seats 18 people

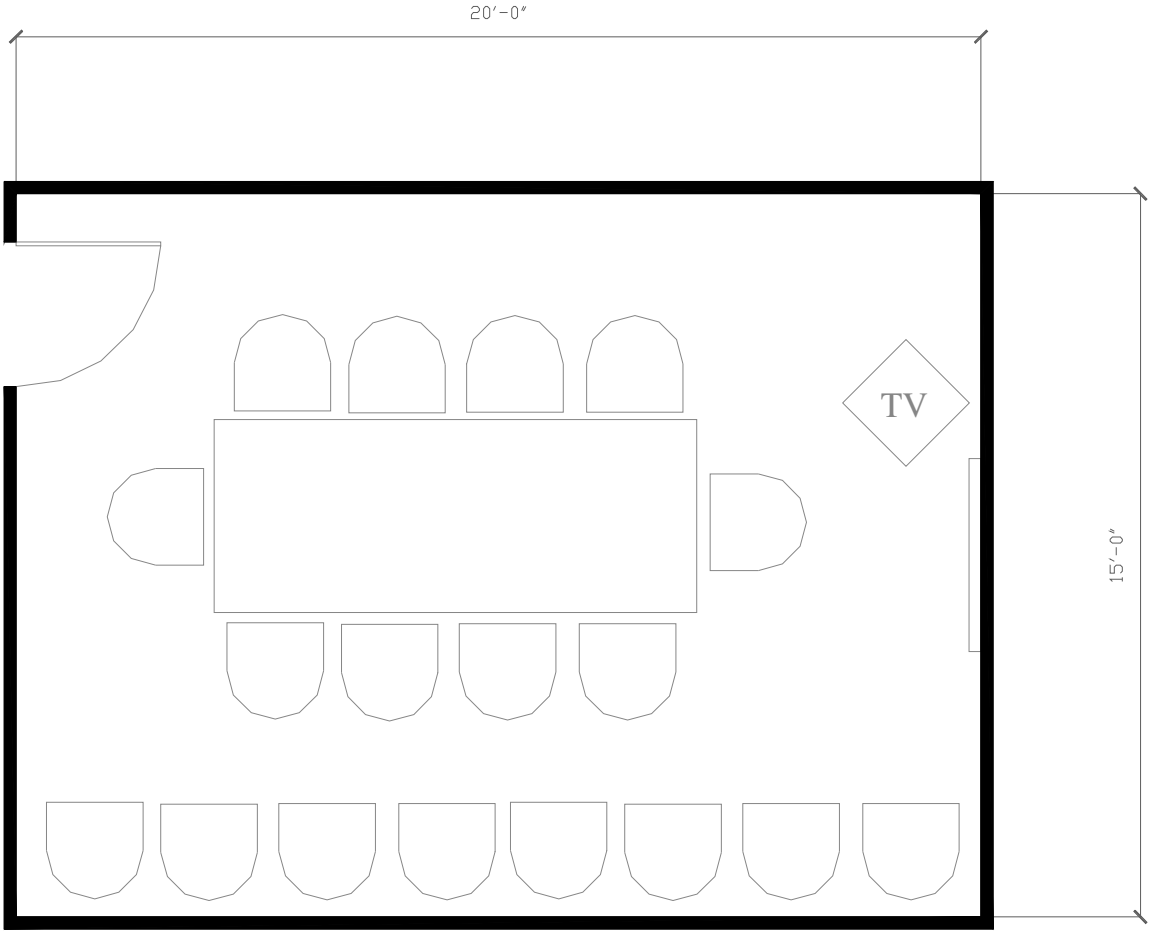

General Services / Architecture & Engineering scale ¼" = 1'-0"

20x30 CR = TYPICAL EXTRA LARGE CONFERENCE ROOM

CONFERENCE ROOM 20 x30 CR

20 x 30 600SF Usable
Seats 37 people

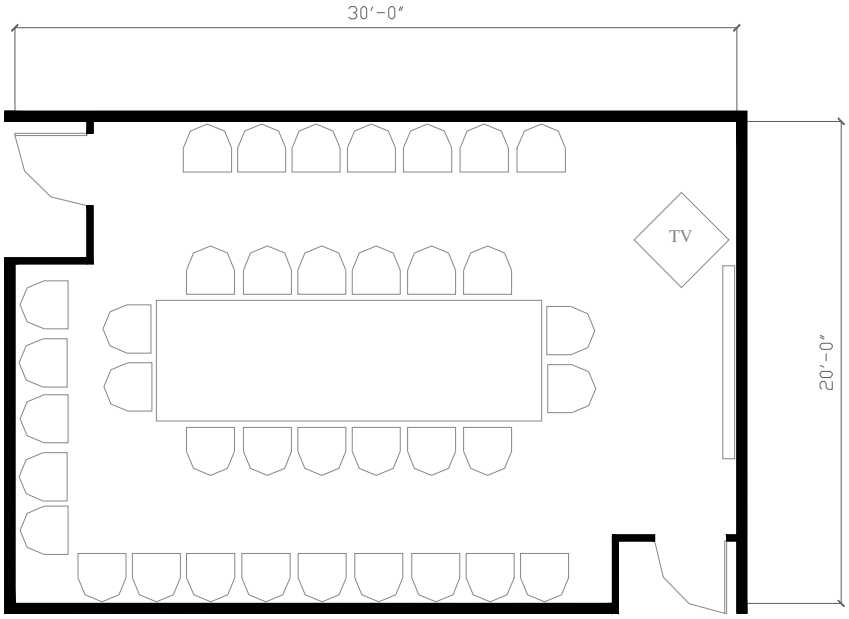

General Services / Architecture & Engineering scale ¼" = 1'-0"

6x6 RA = TYPICAL SMALL RECEPTION AREA

Reception Area	6 x 6 RA
6 x 6	48 SF Net 36 SF Usable
Seats 2 people	

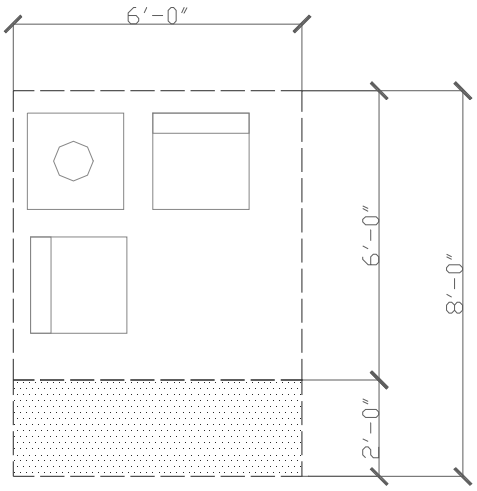

General Services / Architecture & Engineering scale ¼" = 1'-0"

8x10 RA = TYPICAL MEDIUM RECEPTION AREA

Reception Area	8 x 10 RA
8 x 10	100 SF Net 80 SF Usable
Seats 5 people	

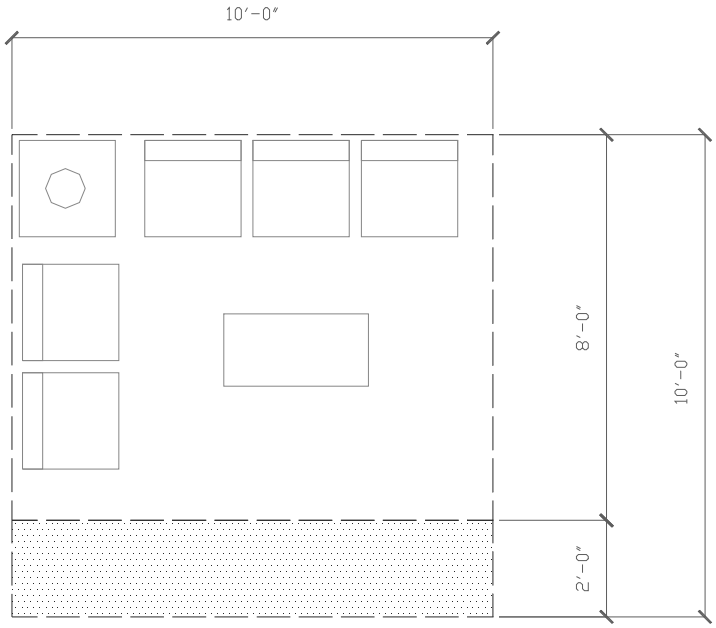

General Services / Architecture & Engineering scale ¼" = 1'-0"

8 x 12 RA = TYPICAL LARGE RECEPTION AREA

Reception Area	8 x 12 RA
8 x 12	120 SF Net 96 SF Usable
Seats 7 people	

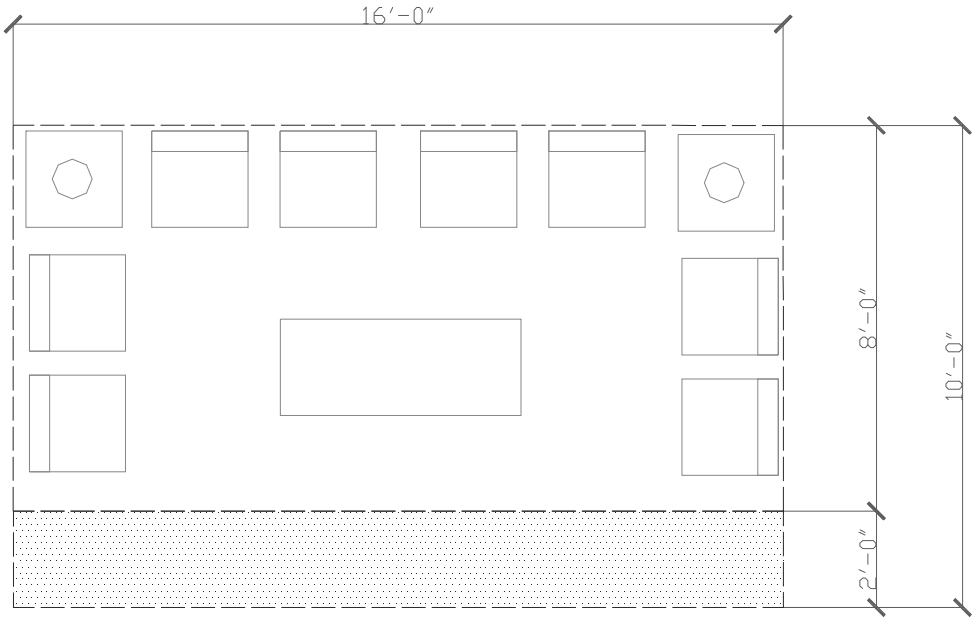

General Services / Architecture & Engineering scale ¼" = 1'-0"

8x16 RA = TYPICAL EXTRA LARGE RECEPTION AREA

Reception Area	8 x 16 RA
8 x 16	160 SF Net 128 SF Usable
Seats 8 people	

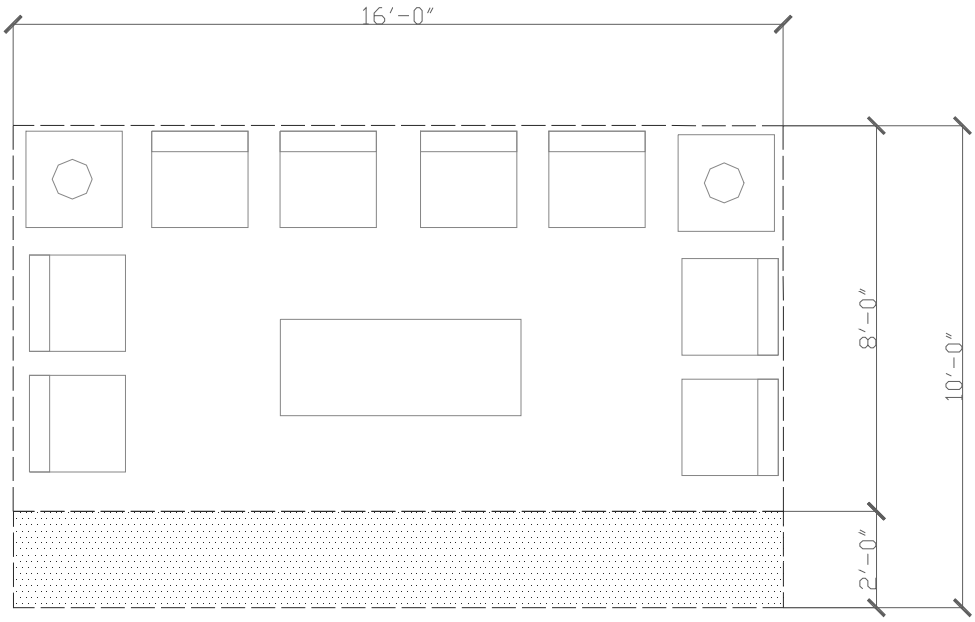

General Services / Architecture & Engineering scale ¼" = 1'-0"

20x25 BR = TYPICAL BREAK ROOM

Break Room	20 x 25 BR
20 x25	500 SF Usable

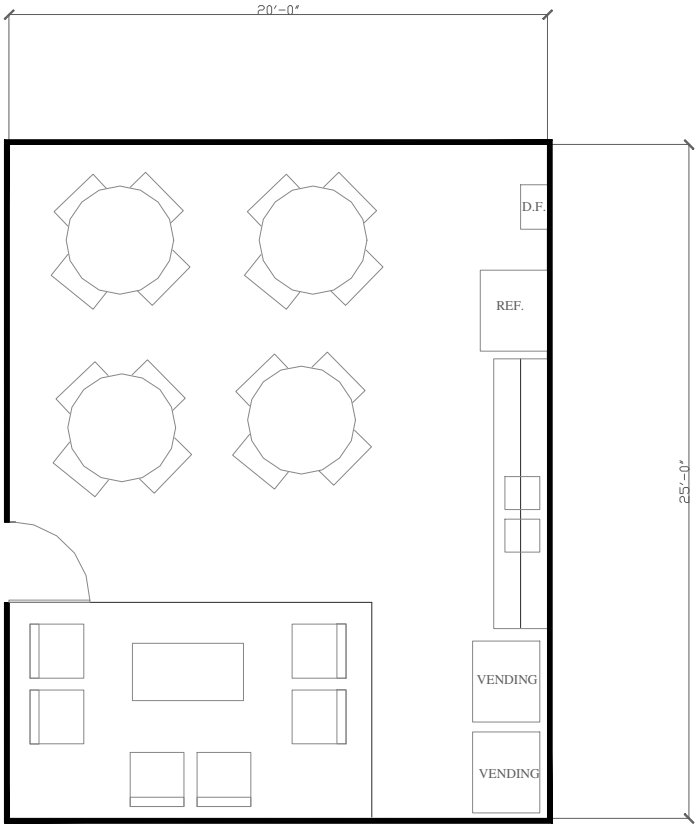

General Services / Architecture & Engineering

8x10 CA = TYPICAL COFFEE AREA

Coffee Area	8 x 10 CA
8x10	80 SF Usable

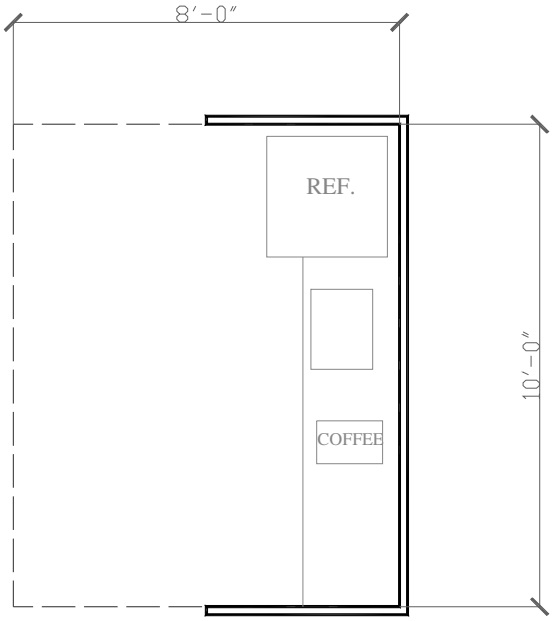

General Services / Architecture & Engineering

Training Room 35x40 TR

35x40 1500 SF Usable

35x40TR = TYPICAL TRAINING ROOM

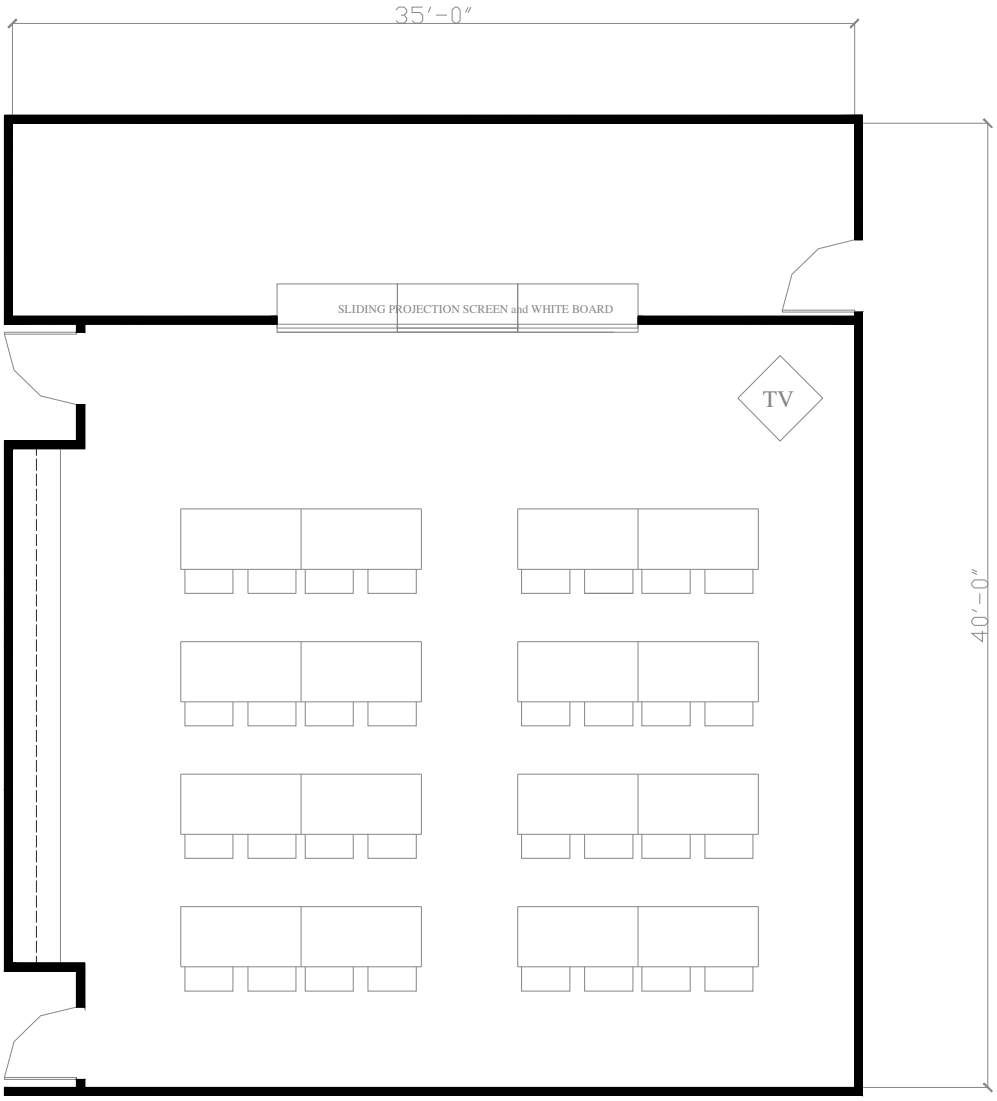

Locker Room 34x40 LR

34x40 1360 SF Usable

Women Locker Room

34x40 LR = TYPICAL MEN & WOMEN LOCKER ROOM

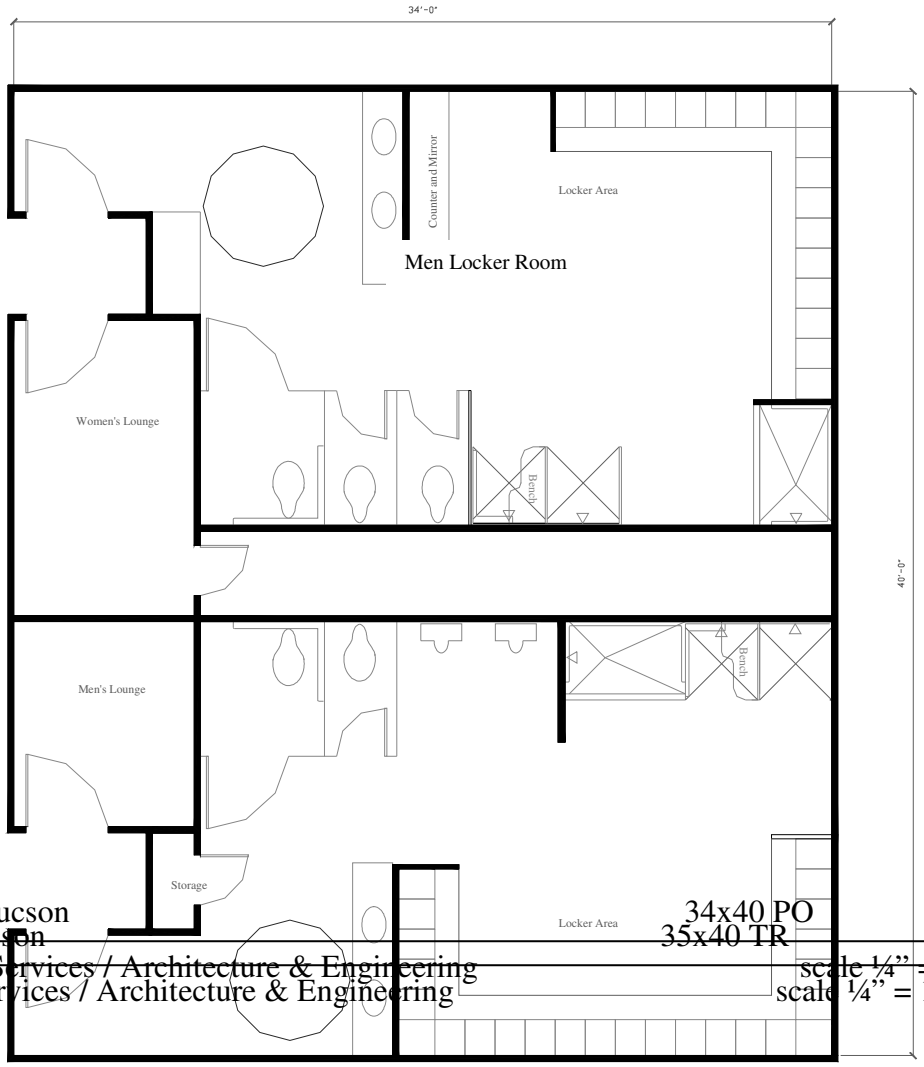

5x5 EC = TYPICAL ELECTRICAL CLOSET

Electrical Closet 5 x 5 EC

5 x 5 25 SF Usable

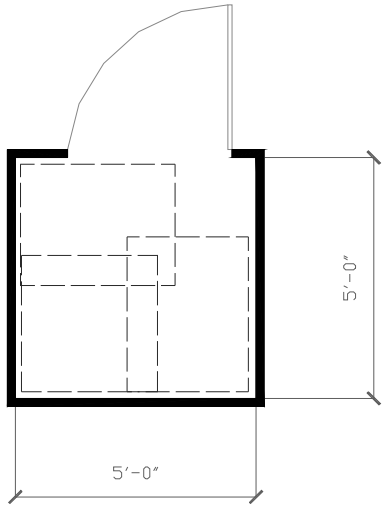

6x8 CC = TYPICAL CUSTODIAL CLOSET

Custodial	**6 x 8 CC**
6 x 8	48 SF Usable

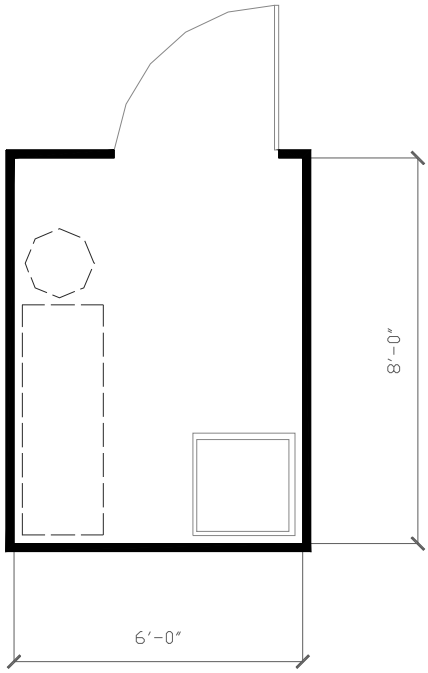

TABLE OF CONTENTS

I. SECTION 142000 – ELEVATORS

General - Conveying Systems
With any new or modernized conveying system, always comply with current Code requirements (i.e. Fire/Life/Safety), federal regulations (ADA), maintainability (lower cost of maintenance) and low energy consumption (environmental consciousness). Rev3/4/08

Wheel chair lifts shall be either manufactured by Garaventa; or equal to or better than those manufactured by Garaventa. Rev3/4/08

SECTION 142000 ELEVATORS

Hydraulic elevators are to be used in low rise buildings with two to three floors. Traction Elevators are to be used in buildings over three stories.

All elevator doors in a bank of elevators shall have the same opening configuration and the same configuration on all floors. Rev 4/16/08

The elevator shall not be used temporarily for construction purposes unless specifically allowed by the City of Tucson project manager. If the contractor is allowed to use the elevator prior to Substantial Completion of the project, the warranty and service period shall not be compromised and shall begin when Substantial Completion is achieved.

Provide an elevator cab with removable ceilings, freight pads and hooks for at least one elevator that services all floors, or provide a freight elevator that services all floors. The cab with removable ceilings, freight pads and hooks or a freight elevator shall have a 12ft.vertical clearance (preferable) for future remodeling materials, furniture and equipment. Rev 4/16/08

Elevators with new technology (e.g., not requiring a separate elevator equipment/machine room), requires prior approval by Development Services Department and Fire Department.

Elevator Finishes and equipment:

Use Stippled Stainless Steel in the cabs, doors and entrances where possible. Use integral color floor and wall materials where minor scratches can be “buffed – out”.

Optional flooring: Use carpet squares for flooring, with sufficient “attic stock” for five years.

Use colors and materials to coordinate with all elevator lobbies served by that elevator.

Use the same type of lighting in the cab as the elevator lobbies to not distort the colors and materials used inside the elevator cab.

Multi - Story Buildings: If a building has six or more floors, provide hall position indicators with elevator floor position for every floor. (At peak elevator operation hours, occupants can opt to use the stairways in lieu of waiting for the elevator.)

TABLE OF CONTENTS

I. SECTION 211000 WATER-BASED FIRE-SUPPRESSION SYSTEMS

WATER-BASED FIRE-SUPPRESSION

GENERAL

New and existing buildings shall be provided as required with a wet fire sprinkler system. Systems shall be acceptable to the Authority Having Jurisdiction (AHJ) as well as Tucson Fire Department, the underwriting agency and appropriate NFPA requirements.

Design shall include as a minimum, available water flow, water pressure, building classification, sprinkler and standpipe risers supply piping, terminations of sprinkler main and inspection test drains, sprinkler alarm valves and waterflow and tamper switches and sprinkler system fire department connections, test and pipe drain locations, floor drains to avoid flooding and pipe sizes. Fire Suppression drawings are to be integrated or referenced in other project drawings. Show where occupied areas do not require automatic sprinklers. Show interconnections to HVAC EMCS systems for duct smoke detectors and fire alarm system. Provide shunt-trips on pre-action systems in IT MUX rooms. Emergency exhaust control is to be independent of the HVAC EMCS system.

Contractor is to provide shop drawings, and calculations approved by the AHJ. Contractor is to verify the certification of all installation personnel.

Freeze protection methods shall be provided with COT approval.

Provide record drawings with system schematics, operation and maintenance manuals, and a training walk-through for COT personnel once the system is fully accepted by AHJ.

Risers, valves, controls, etc., shall not be installed in areas where the public has access. Provide protective enclosures for horns, bells, gauges, valves, etc. Provide isolation in buildings by floor and by building additions. Provide drains on piping for flushing, testing, and draining the system, to the outdoors. Provide protection in areas of athletic activities. Show discharge points on the drawings. If testing drainage and flushes discharge to the building exterior, the area of drainage is to have adequate conveyance in place.

Equipment rooms should have a floor drain with floor slope to the drainage.

All sprinkler pipes must be concealed except for equipment room. Flow switches and tamper switches shall be installed and connectable into the fire alarm system and indicate trouble when valve is not in full open position.

Through the alarm system, shut down or redirect the air handler and exhaust fan systems within the building if necessary to comply with fire or building safety codes.

Fire sprinkler system shall be supplied water from fire line. Do not connect to domestic water piping inside the building.

Provide a Class A system with battery back-up. Provide name of local distributor.

Automatic fire sprinkler equipment shall be approved by Factory Mutual (FM) and Underwriter's Laboratory (UL). Flow switches and tamper switches shall connect to building alarm system. Provide two-piece adjustable escutcheons for heads and swing joints from branch pipe to heads.

The inspectors test shall be at the most remote location from riser. All sections of pipe must be drainable either through the main drain or auxiliary drains including pre-action systems. Test per NFPA 13 shall be witnessed by City of Tucson Fire Department personnel.

TABLE OF CONTENTS

I. SECTION 220500 COMMON WORK RESULTS FOR PLUMBING

II. SECTION 221000 PIPING AND PUMPS

III. SECTION 223000 PLUMBING EQUIPMENT

IV. SECTION 224000 PLUMBING FIXTURES

I. SECTION 220500 COMMON WORK RESULTS FOR PLUMBING

ANSI A13.1 - 1981, Scheme for the identification of Piping Systems.

ANSI Z53.1, Safety Color Code for Marking Physical Hazards.

PIPE IDENTIFICATION

Permanent Pipe identification markers and arrow flow markers shall be provided on all piping systems.

Pipe identification shall be suitable for all temperatures anticipated.

Each marker shall indicate direction of flow with an arrow pointing away from the marker. The marker shall comply with ANSI A13.1 and ANSI Z53.1 for Scheme and color codes.

EQUIPMENT IDENTIFICATION

Valve identification tags shall identify the function and use of the valve per notations on the drawings and schedules.

INSULATION

Insulate all cold surfaces to prevent condensation. Insulation shall meet the requirements of ASHRAE Standard 90.

Provide sufficient insulation to prevent pipe freezing or locate pipe in heated area. Insulation shall maintain its full thickness at supports and be removable for maintenance of equipment. Use canvas covering overall insulator in mechanical rooms where exposed to damage. All exterior insulation shall be weatherproofed w/aluminum jacketing.

ACID WASTE SYSTEM

Neutralization system must meet Waste Water Management requirements. Piping system must be suitable for the materials put into the system. Traps and piping under counters shall be GSR, Fuseal or equal. Traps shall be **drum** type with removable base.

BACKFLOW PREVENTION

Minimum requirements for backflow protection of the potable water supply are stated in the Arizona Department of Environmental Quality Regulations, latest version of the Plumbing Code and the *Manual of Cross-Connection.*

Internal protection must be provided in accordance with the latest version of the Plumbing Code, and OSHA regulations. This includes make-up water lines to boilers, chillers, and locations where contamination or pollution can occur through cross-connection.

Do not set backflow assemblies in concrete.

The contractor shall provide a compliance test report prepared by a certified backflow tester. The successful certified compliance report shall be submitted by the contractor concurrently to the Tucson Water Department and City Construction Administrator.

The backflow assembly and any piping above the ground shall be insulated to prevent freezing.

A protective cage shall be specified to cover all backflow assemblies and piping above grade where vandalism and other damage is possible. The protective cage shall be lockable.

Backflow assemblies shall be limited in size to a maximum of two (2) inches in diameter, as much as possible, except for fire sprinkler lines.

ANTI-SYPHON EQUIPMENT

Anti-syphon equipment shall meet Water Department code. Provide anti-syphon device on all equipment where required by Pima County Health Code and/or by the Water Department.

INSTALLATION REQUIREMENTS

The contractor shall obtain an installation permit for all backflow assemblies.

The contractor is obligated to submit copies of all backflow assembly test results, copies of development services inspection sheets and final sign off forms to the owner prior or upon the issuance of the project's substantial completion certificate.

The contractor shall provide a compliance test report prepared by a certified backflow tester. A copy shall be sent to Tucson Water and the City of Tucson Project Manager.

Backflow assemblies shall be installed as close to the meter as possible. One assembly shall be installed per meter unless the assemblies are manifolded.

Manifolding of potable water lines is encouraged so testing and maintenance can be performed without shutting water off to the facility in critical circumstances.

If new lines are installed, they shall have separate meters or be connected downstream of the service protection.

Installations elevated more than five (5) feet (1.5 m) above the floor or grade shall be provided with a permanent platform and access capable of supporting testing or maintenance personnel and their equipment.

UPC approved metal piping shall be used for potable water installations, copper pipe is recommended to be used at all the risers. Brass unions will be installed up stream and down stream of the assembly.

A wye strainer is required to be installed parallel to the assembly, before the number one (1) shut off valve. Wye strainers are not to be installed in a vertical position.

Backflow devices, when installed near any wall, fence, or enclosed area, must have a minimum clearance of twelve inches, (12") from the barrier and outside diameter of the UPC approved metal piping. In the event the Backflow device is installed with the assemblies test ports facing any wall, fence, or enclosed area must have a minimum clearance of twenty-four inches, (24") from the barrier and outside diameter of the UPC approved metal piping.

Backflow assemblies shall be installed in accordance with the Health Department, or other departments having jurisdiction.

II. SECTION 221000 PIPING AND PUMPS

SEWER SYSTEM
Sewer System inside the building shall be no-hub cast iron, with stainless steel bands to 5'-0" outside building, beyond 5'-0" shall be schedule 40 PVC- primer and cement. (ABS-Has Tendency to Bow)

DOMESTIC WATER
Domestic water piping up to 4 inch size shall be Type L hard drawn copper with no-lead, silver soldered joints **or "Silverbrite 100" lead free solder.** Over 4 inch size shall be Schedule 40 galvanized or copper pipe. Lead solder shall not be used. When lead solder is discovered in older buildings the engineer shall review and recommend course of action. Underground piping shall be "Type K soft tubing w/no joints."

WATER METERS
1. Show all changes in meter sizes for new projects as well as changes to existing buildings.

2. Note all the water demands in gpm's on the plans.

3. Note the expected pressure loss through the meter and pipe from the meter to the back of the project.

4. Contact Tucson Water to get the expected water pressure.

5. The AWWA standards should be used for continuous flow though the water meter, which is roughly ½ of the maximum capacity for each meter size. The City of Tucson is using: 5/8"=10 gpm, 1"=25 gpm, 1.5"=50 gpm, 2"=80 gpm. for large meters use these manufacturers numbers; 3"=350 gpm, 4"=500 gpm, 6"= 1000 gpm

6. The City of Tucson uses Neptune meters for 5/8" & 1" meters, badger meters for 1.5" & 2" meters, Actaris for 3", 4" & 6" single jet meters and Sensus meters for 3", 4", 6" & 8" turbo meters.

7. The City of Tucson water pressure can range from 35-85 which can also affect the meter sizing.

8. There is no more manifolding of meters. 1 meter per unit or set of fixtures. Strip malls can have one meter per store, but most buildings need one meter, properly sized.

9. Where cooling towers are used sub-meters are required on tower make-up and tower blowdown. Where possible these sub-meters shall be monitored and mapped into the City's EMCS system.

NATURAL GAS PIPE

Gas pipe shall be Schedule 40 black steel. Provide independent AGA approved gas shut-off on each gas-fired appliance. Provide accessible drip leg at each appliance (installation per the latest version of the Plumbing Code).

PIPE

All new construction pipe shall be installed concealed, if possible. Do not install in masonry walls, but in furring outside the masonry.

Access must be provided for maintenance.

All non-metal underground piping shall have magnetic locator strips or locator wires for future Blue Stake.

UNIONS

Unions shall be provided so all equipment, strainers, valves and relief valves may be removed, to include trap-primer. Die-election union must be used when changing from Ferrous to Non- Ferrous Piping

STRAINERS

Blowdown valve to be ball valve, full port, with hose adapter.

VALVES

Valves shall be full port ball valve, screwed or flanged provide screwed union after valve (accessible).

The City prefers American made valves such as "Nibco" ball valves.

Isolation valves shall be installed on all branches off a main plumbing line.

CENTRIFUGAL PUMPS

PUMPS-IN-LINE - Domestic Hot Water Return

Pumps-in-line shall be used only for plumbing system, all bronze or stainless steel, and controlled from Aquastat. Provide isolation valves and unions. Flanged or screwed

THERMOMETERS AND GAUGES

Where instrumentation is specified these standards shall be used unless an alternate is approved. Thermometers and gauges shall be readable from floor level, have separable socket for thermometers and stop cocks for gauges. Provide impulse dampeners where necessary for gauges.

Provide bi-metal thermometer, 5" diameter dial, back connection, adjustable angle, 1% accuracy or equal. Provide with hermetically sealed 304 stainless steel case and stem assembly, tempered crystal glass face, friction pointer, zero adjustment and 304 stainless steel connection nut. Install in separable socket.

Install each thermometer in a 304 stainless steel separable socket of proper depth for the service intended. Provide extension necks for insulated piping.

Operating ranges shall be selected to assure nominal temperature readings at the midpoint thereof.

Provide liquid filled pressure, compound or vacuum gauge, bottom connection, 1/2% accuracy or equal. Provide with cast aluminum case, chrome plated ring, glass face, phosphor bronze bourdon tube and friction pointer. Operating ranges shall be selected to assure nominal readings at the midpoint thereof.

Provide snubber, coil syphon and T-handle gauge cock for each gauge.

III. SECTION 223000 PLUMBING EQUIPMENT

GENERAL

No evaporative coolers shall be installed on a metal roof.

Each separate building shall be provided with a single gas meter.
No underground gas piping on the building side of a gas meter.

Provide for future expansion for new buildings. Terminate sewer so it may be extended. Water shall terminate with a valve and capped pipe for future extension.

Where drains are not near regularly used fixtures, provide trap primers, strainers, ball valves and unions.

Each group of fixtures shall be provided with ball valve shut off valves and access panels. Show all access panels on the drawings.

Water and sewer vent piping shall be installed to not interfere with flush valve maintenance, 6" minimum clearance shall be maintained from valve and related piping.

All equipment shall have seismic isolators. Spring isolators are preferred to rubber.

WATER CONSERVATION:

The following strategies shall be considered:

Provide waterless urinals.

Provide passive and/or rain water harvesting in accordance with current requirements for commercial construction.

Design a complete irrigation system to provide water to the necessary plant material, both new and existing, associated with any new work. The system shall be automatic, underground, and designed to conserve water and be as efficient as possible while still meeting the water requirements for all plantings. The system shall separate from the domestic water service and have its own meter. Where reclaimed water is available, system shall be connected to reclaimed water. Refer to City of Tucson Water Reclaimed Water User's Manual with supplements A & B.

Generally sprinkler heads shall be located 10 feet away from fence and building lines. Turf growth along fence and building lines should be discouraged. Areas of turf should be limited, abandoned areas shall be blocked out.

DOMESTIC WATER SYSTEM

Provide a method for balancing circulated domestic hot water. Provide time clock or EMCS control such that the circulator pump operates only during occupied periods.

All domestic hot and cold water piping outside the building insulation envelope (i.e., in attic spaces) shall be protected from freezing by suitable insulation.

Provide reduced pressure backflow prevention for all heating and cooling make-up water with strainer on inlet. Install a drain pipe to nearest floor drain. Reduce pressure to dish machines to lowest level possible. All backflow prevention and pressure reducers shall be mounted a maximum

of 5 feet above finished floor. 1' + above the fixture it serves, refer to General Requirements Section 603.2.3 - page 63 of Uniform Plumbing Code, 1994 Edition.

PROCEDURES FOR WORKING WITH ASBESTOS CEMENT PIPE

Refer to Tucson Water, 5 Star Safety System, Element 5.50; Procedures for Working with Asbestos Cement Pipe.
For 24 hour emergency service, call 791-4133.

HOSE BIBBS

Flanged Hose Bibbs shall be loose key type. Loose key hot and cold water mixing valves at washing area for kitchen will be maximum 140 degrees hot water. Provide vacuum breakers as required by code.

DISH MACHINE

Dish machine shall be equipped with water pressure regulator and in-line bronze strainer. Use no PVC piping to dish machine.

GARBAGE DISPOSAL

Shall be 1/2 HP minimum, "commercial grade."

SOIL AND WASTE PIPING SYSTEM

References:
Pima County Wastewater Management;
Manual of Engineering Standards and Procedures.

DRAINS

FLOOR DRAINS

Floor drains shall be installed with floor sloped to drain- slope at a minimum of 2% per ft. In areas where drains are not near regularly used fixtures, provide a trap primer, strainer, ball valves and unions. Drain cover shall be metal, suitable for the service without distortion. Drains above grade shall have draining flange with flashing and flashing clamps. All trap primer valves shall have access panels.

Provide floor drains in kitchens and at other locations where agreed to with the Project Manager.

Floor sinks are required in equipment room at pumps, and in kitchens where required, keep to a minimum.

CLEAN-OUTS

Clean-outs outside shall be placed at grade with 12” x 12” x 12” concrete encasement and shall be covered with screws to hold cover in position. Clean-outs shall be same size as soil or waste pipe with covers to be installed using pipe thread tape on the threads. Kitchen multi-bowl sinks shall have clean-out plugs on the horizontal drain pipe from the end bowls prior to the trap to allow rodding of pipe from tail piece to trap. Provide unions on hard piping for removal.

ROOF VENTS

Soil and waste piping system shall have flashing that is supplied by the roofing manufacturer or COT approved equal on vents compatible with roof supplies. Roof vents are to terminate at a minimum of 1’ ft. above the finished roof.

DOMESTIC WATER HEATERS

WATER HEATERS

Water heaters shall have a maximum capacity 199,000 BTU rating, have glass lined tanks equipped with hand holes for cleaning and inspection, and have anode rods. Pipe to allow maintenance space and provide pipe from relief valve, union close to relief valve. Provide expansion tank where required by the latest version of the Plumbing Code.

Use gravity type burners with electronic ignition and flue dampers. Use two or more if necessary. Provide minimum clear space of 2’-0” in front of hand hole. Design adequate space for removal of water heaters from the building.

Use small electric water heaters for use with four lavatories and mop sink or less. Use instantaneous water heaters for isolated fixtures in breakrooms, and offices.

All water heaters shall be internally insulated to meet the requirements of ASHRAE Standard 90. Water heater drain shall be provided with full port ball valve with hose adapter and cap.

Do not suspend water heaters or place on a shelf.

Provide time clock or EMCS control such that the circulator pump and gas supply operates only during occupied periods. Incorporate it with heating and cooling systems. Provide full port ball valve and hose adapter on drain line.

Provide solar batch type water heating where appropriate. Consultant shall provide a life cycle cost analysis for this option.

IV. SECTION 224000 PLUMBING FIXTURES

Plumbing fixtures shall be COT approved. Fixture heights shall be as shown on architectural drawings. Flush valves shall be low water use having brass reinforced neoprene diaphragms. All fixtures shall have loose key, threaded or compression stops. Provide valve on water pipe inside electric drinking fountain cabinets. All fixtures shall be selected for eligibility for available rebates from the applicable water utility.

When a project is adding to a building fixture count that ties into the existing sewer lines, a review of building sewer line maintenance records is to be made to see if there are any concerns with the under slab or hidden sewer and vent lines that would require the lines checked for condition using a camera system.

PLUMBING TRIM

A period of flushing is generally required to alleviate initial lead concentration to the desired levels. Installed fixtures shall be rinsed daily for a period of not less than 30 seconds each. The flushing shall continue for a minimum period of two (2) weeks. City of Tucson shall be notified at conclusion of flushing period. Verification samples may be collected by a City of Tucson representative. An additional two week flushing period may be required. Records of flushing shall be maintained and available for City of Tucson inspection.

WATER CLOSET

Water closet shall be vitreous china or stainless steel where required, flush valve, or flush tank, type elongated, 1.6 gallon per flush, white seat with check hinges. If more than two water closets are necessary for a facility they shall be flush valve. The City prefers "Sloan" flush valves, "Zurn" is acceptable. The plumbing contractor is to ensure flush valves are received from the manufacturers without flaws or defects prior to installation. Flush valves and water closet shall meet requirements for applicable rebates.

URINALS

Urinals shall be vitreous china or stainless steel where required. Flush valve and fixtures shall be compatible for low water use, to meet code requirements of 1 gallon per flush. The City prefers "Sloan" flush valves, "Zurn" is acceptable. The plumbing contractor is to ensure flush valves are

received from the manufacturers without flaws or defects prior to installation. Verify with the City's A&E Division if waterless is required for new construction or specified existing buildings.

LAVATORIES (WALL HUNG)

Lavatories (Wall Hung) shall be vitreous china or stainless steel where required, 20" x 18" minimum (with the exception of child care). Faucets shall be slow self-closing after delivery of 0.25 gallons. Strainer shall be Grid strainer. The City prefers "Chicago" or "Delta" faucets. ("Symmons" valves- Not Acceptable.)

LAVATORIES (HANDICAPPED, WALL HUNG)

Lavatories (Handicapped, Wall Hung) shall be vitreous china, ADA approved with round or oval bowl, overflow and self-rimming. Faucets shall be slow self-closing, after 0.25 gallons. The City prefers "Chicago" or "Delta" faucets.

SINKS

Sinks, other locations, shall be 18 gauge, stainless steel type 302, self rimming. Drain shall be crumb-cup strainer or grid strainer. Provide with water flow restrictors. Sink sizes and quantity of bowls may be modified to meet special requirements.

SERVICE SINK

Service sink shall be enameled cast iron. Provide with vacuum breaker, minimum 36" heavy duty hose and screwdriver stops. Drain shall have grid strainer. Provide bumper guards to protect the sides and top edge from damage.

SHOWER

Shower valve shall be single lever, balanced pressure with scald guard volume control either as part of the valve or the showerhead. Showerhead shall be self-cleaning low water flow head. Water to shower, either single or groups, shall have shut off valve in a supervised area to turn off the water to all heads. Showers shall be provided with tempered and cold water controlled by a mixing valve in a supervised are. The City prefers "Chicago" or "Delta" faucets with integral stops required, ("Symmons", "Acorn" and "Bradley"- Not Acceptable).

DRINKING FOUNTAINS

All drinking fountains shall be lead and CFC free.

GREASE TRAPS

Grease traps shall be located outside.

Grease traps shall have cleanout located at the outlet, at piping.

Grease interceptor should be located outside the building for multi-compartment sinks.

TABLE OF CONTENTS

I. SECTION 230000 GENERAL REQUIREMENTS

II. SECTION 230100 MECHANICAL COMMON ITEMS

III. SECTION 230500 HEATING, COOLING AND VENTILATION

IV. SECTION 233000 AIR HANDLING

V. SECTION 235200 BOILERS

VI. SECTION 236000 CONDENSERS AND COOLING TOWERS

VII. SECTION 237000 HEATING AND COOLING AND WATER SPECIALTIES

VIII. SECTION 238000 DESIGN REQUIREMENTS

IX. SECTION 238100 CONSTRUCTION

X. TABLE OF ABBREVIATIONS

I. SECTION 230000 GENERAL REQUIREMENTS

These specifications are intended to present requirements and preferences of the City of Tucson (COT) for HVAC systems. They are intended to supplement and not to replace commonly used and more comprehensive industrial standards. Where a particular system, piece of equipment or condition is not covered herein, the designers shall confer with the COT Project Manager and use their best judgment.

The designer is ultimately responsible for their design and shall include a review for functionality and maintainability. All design work shall include reference to and specify compliance with the latest version of plumbing codes, building codes, mechanical codes, energy codes, ASHRAE standards, and Arizona Title 34. Refer to COT website, Property, Buildings &

Homes. In addition to the normal 2 year warranty, specifications shall provide for an alternate to extend warrantee on compressors for 5 years including parts and labor.

The contractor is to provide a complete set of as-built drawings, which include showing pipe below grade level or below floor level. Complete sets of Operating and Maintenance Manuals with warranty information shall be provided.

When renovating existing systems the mechanical engineer shall perform a pre-design test and balance survey prior to design work to validate existing capacities.

Mechanical equipment shall be housed in an equipment room, within a building or accessed from outside.

Running refrigerant lines underground is not acceptable unless provided with approved encasement.

Roof penetrations shall be kept to a minimum. No mechanical equipment shall be placed on the roof except as stipulated is these specifications or approved by COT. Necessary and designed equipment such as vents, drains, skylights and solar systems are acceptable.

Equipment rooms and storage rooms shall be separate.

Provide a separate storage space large enough for a one-year supply of filters.

II. SECTION 230100 MECHANICAL COMMON ITEMS

MOTORS

Motors starters and drives including VFD's shall be coordinated with the control system and shall be furnished in accordance with Electrical Division 26.

High and low voltage control interlock wiring shall be specified under Electrical Division 26 unless designated to a DDC system and contractor for the project.

Motors shall be a minimum of high and preferably premium efficiency type.

Motors shall be three phase whenever practical.

Motor identification shall be coordinated with the HVAC and other equipment that it drives and as approved by the COT.

Motors with horizontal shafts shall have protective guards meeting COT safety standards and as specified by the OEM manufacturer. All exposed parts of rotating horizontal shafts with any elevation of seven (7) feet or less above the floor or working platform level shall have protection added. Runway platforms for oiling, and adjustments can also be used for attaching protection as approved by COT.

ACCESS DOORS

Access Doors shall be provided to all concealed equipment including valves. Specify proper fire rating as required by code. All access doors shall be shown on drawings and specified in Division 08.

LABELING

Label pipes with stenciled letter codes, on pipes or insulation to indicate type and direction of flow. Label mechanical room doors.

OPERATING SYSTEMS

Contractor shall perform a functional test including starting and operating all systems. Contractor shall instruct COT maintenance personnel in the operation and maintenance of the equipment and in coordination with systems commissioning.

LEAK DETECTION

Electrical sensor, pressure drop, or combinations of both may be employed for leakage detection systems that shall be provided for underground HVAC water piping systems. Other survey and test methods may be employed to help the identification of leak location. Water leakage survey methods shall only be designed and installed by trained personnel. Leakage training will be provided to COT personnel by qualified contractor personnel.

HEATING AND COOLING WATER SYSTEM PIPING

Piping that is 2” and smaller shall be Type L hard drawn copper with 95-5 silver soldered joints. Piping that is 2 1/2” and larger shall be Schedule 40 black steel with welded or grooved couplings.

Underground HVAC water systems shall receive approval and be installed in protective and accessible chases.

Cooler rooms, air handlers, and HVAC units shall be provided with a hose bib for cleaning. Mechanical rooms containing water systems shall have drainage.

BASE-MOUNTED PUMPS

Base-mounted pumps shall be used for heating and cooling system, base mounted on concrete base, have mechanical seal, bronze fitted.

III. SECTION 230500 HEATING, COOLING AND VENTILATION

GENERAL

HVAC cooling systems under 100 tons capacity are preferred to be air cooled unitary equipment.. Over 100 tons shall be designed with a chilled water circulation system. Heating systems shall be electric heat, heat pump, natural gas indirect fired, or hot water. Ceiling mounted fan coil units shall be avoided. Systems and equipment shall be connected to EMCS. Reference the COT EMCS Guide Specifications for more detail.

Minimize roof mounted equipment or piping except exhaust fans, relief and make-up air hoods, and solar equipment as approved by COT.

Provide for future expansion for new buildings and, where feasible, have boilers, chillers and auxiliary equipment located in one area and in rooms.

WORKING SPACE

Working space and access shall be provided for maintenance without requiring the removal of permanent construction or interfering with future replacement of equipment. This shall include space to replace bearings, removing of shafts, and pulling of heat exchanger tubes. Indicate clearance on drawings. Access door or panel through adjacent walls should be considered to reduce floor area.

AIR PURIFICATION

An air purifier shall be evaluated for installation inside air handling units using UV type C Lamps where germicidal air quality issues are known to be a concern (i.e. dormitory areas) and as approved by COT. The UVC Lamps shall emit wavelengths known to produce disinfection. The UVC Lamps should have a lamp life of at least 7500 hours. The UVC Lamps shall not exceed EPA approved levels of mercury. Light baffles shall be incorporated to help prevent exposure to UVC light. A safety switch shall be incorporated into the equipment access panel to prevent exposure to UVC light when the access panel is opened.

HEATING & COOLING DISTRIBUTION

Underground heating and cooling distribution systems shall be designed and built in accordance with established standards that have demonstrated and substantially proven records of years of service without significant deterioration and shall include leak detection. An example standard is USACE UFGS-33 61 13- Unified Facilities Guide Specifications, Section 33 61 13, Pre-engineered Underground Heat Distribution System.

All heating systems shall have isolation valves, drains and vents on all branch circuits for routine maintenance purposes. Gate valves are preferred for isolation. Above ceiling piping is to have leak protection. Do not use black steel pipe for heating and cooling above dropped ceilings.

Mechanical equipment, pipes and ducts shall be insulated in accordance with ASHRAE Standards to prevent condensation and to restrict heat transfer. Water and hydronic piping shall be located to prevent freezing and be provided with inspection access for operations and maintenance purposes.

Provide valves for the inlet and outlet of all equipment fluid piping. Hose bibs are not acceptable for vents and drains. Provide chemical feeder pots as approved by water treatment contractor.

Provide flanged taps for attachment of temporary HVAC and for attachment of temporary condensate water.

IV. SECTION 233000 AIR HANDLING

AIR HANDLERS

Roof mounted mechanical equipment is not preferred. When roof mounting is required, air handlers, evaporative coolers and similar equipment should be provided with stairs, not ladders, and provided with full maintenance access and required trip and fall protection.. Public access prevention shall be addressed and approved by COT. Provide walkway pads or catwalks for all roof mounted equipment. Provide hinged access doors & windows for all maintenance access requirements.

Gas fired air heat exchangers shall be used. Direct fired heating is not acceptable. Evaporative cooled air and heating air are to be separate systems.

OUTSIDE AIR / EXHAUST AIR

On air handling units with outside air, provide coils with copper tubes, and aluminum fins with a maximum 10 fins per inch. Air handlers shall utilize the outside air economizer cycle with local coil freeze protection or a wet side economizer with a chilled water system.

Toilet rooms shall be exhausted with a minimum of 6 air changes per hour, or per current ASHRAE standard 62.

Minimum outside air requirements for each area shall be specified and in conformance with the current ASHRAE Standard. The outside air calculations for each system shall be indicated on the drawings, and included in the balance report. Carbon dioxide sensors shall be evaluated to allow modulation of outside air quantities.

A method shall be provided to relieve air over-pressure to the outside. Building pressurization should be controlled through a relief damper, and building pressure sensor. Sensors shall have maintenance access.

Outside air inlets, shall be provided with an automatic damper arranged to keep the damper closed during unoccupied hours and resume automatic control during occupied hours. Outside air inlets shall be designed with security and other hazard considerations.

If there is a possibility of freezing the coil, provide a freezestat to close outside air dampers and stop the fan.

In VAV air handling systems, positive means shall be incorporated to ensure design outside air flow is provided. Alternative methods of ensuring adequate ventilation can be approved such as carbon dioxide sensors.

MAKE-UP AIR UNITS

Make-up air units shall have a gas fired heater and evaporative cooling. Provide unit with electronic ignition, two-stage burner, and two speed-motor. The furnace portion is to be stainless steel. The control panel is to be factory provided. The media shall be 12” thick, cross-fluted fiberglass.

Building areas using 100% outside air shall have a heat recovery unit unless the payback period is longer than 7 years. The consultant shall provide a payback analysis.

CENTRIFUGAL FANS

Extend grease fittings to side of casing.

V. SECTION 235200 BOILERS

HEATING BOILER

Heating boilers shall be in compliance with the current State of Arizona Boiler and Pressure Vessel Codes. COT preferred industrial boiler quality standards for compliance are NFPA, IRI, and FM. Including hi-low-off operation with I.R.I. gas train and flow switch on boiler discharge with interlocked boiler operation. Flue flashing shall be metal and allow for metal expansion. Set boiler on concrete housekeeping pad. Contractor to obtain operating permits from authority having jurisdiction.

Stack heat recovery or condensing type boiler shall be used on each installation over one million BTUH input.

VI. SECTION 236000 CONDENSERS AND COOLING TOWERS

Air cooled condensers shall be evaluated for systems up to 100 tons. Cooling towers shall be evaluated for systems over 100 tons**.** Evaporative condensers shall be considered only with prior approval from the COT. A rigorous water treatment system shall be required for consideration of any evaporative condenser system.

Condensing water pumps shall have positive head on the suction side. Provide a spring type check valve to prevent the tower basin from flooding when the pump is off. Pumps shall have mechanical seals. Condenser water pump and piping design shall avoid the use of locations requiring a pit.

Cooling towers shall be energy efficient design with towers performance certified by an independent test laboratory or field certified by an independent test and balance agency provided by the contractor. Tower capacity should be rated 125% of actual building cooling load at 78°F EWT. 95°F EDT, 85°F LWT and 3 gpm per ton.

Each cooling tower should use two (2) totally enclosed motors with belt drives designed for wet service. Provision shall be provided with means to ease and provide safe maintenance. Motor and belt drive access shall include a working platform and hoist for maintenance access. All cooling tower fans shall be provide with vibration sensors for safety shut-off.

Provide plate and frame heat exchanger economizer system on all cooling towers used in chilled water service. Heat exchangers should be sized for two degree approach, and a minimum surface area specified by the design engineer.

Cooling towers shall be of corrosion resistant materials and/or non-metallic construction.

Cooling towers shall have a strainer inside the tower on the water outlet. A pump suction screen shall be provided and sized to protect pump impellers.

Provide make-up and bleed-off metering. Provide a bleed-off control valve to close when the tower pump is off.

Cooling towers shall be specified with integral sheer connector mounting design, factory pipe connections, and a basin cleaning system. The basin cleaning system shall be a side stream filtration system or a COT approved equivalent.

Cooling Tower fan and shaft should be supported by heavy duty, re-lubricatable ball bearings with special moisture-proof seals, extended lubrication lines, grease packed, self-aligning, and integral slinger rings. All bearings shall be designed for minimum L10 life of 200,000 hours.

VII. SECTION 237000 HEATING AND COOLING AND WATER SPECIALTIES

GENERAL

The needs for redundancy and backup shall be evaluated and addressed as appropriate for each installation.

Each heating or cooling unit shall be completely factory-packaged including evaporator, condenser, sub- cooler, oil separator, compressor, motor, lubrication system, micro-computer control center (BAC net compatible), solid state starter and all interconnecting unit piping and wiring.

CHILLERS 150 TONS AND UNDER

Compressors shall be capable of being isolated independently for maintenance or service. If the unit is under 100 tons, it shall be air cooled, if at or over 100 tons, it shall be water cooled.

CHILLERS OVER 150 TONS

Unit performance shall be certified in accordance with ARI Standards. Only chillers that are listed in ARI Certification Program and have been manufactured for three years or more are acceptable.

EXPANSION TANK

Bladder tanks shall be used with removable bladder, welded steel, ASME Code constructed and at a minimum stamped for a 125 psi working pressure, and provided with appropriate openings, sight glass on the air chamber side, and floor mounted with pad where possible.

SYSTEM CLEANING

The installation contractor shall submit to COT for approval a cleaning procedure for all piping systems. All pipe systems, for which they are responsible, shall be clean and free from corrosion during filling, testing, and draining operations. Piping systems shall not be filled with untreated water unless chemically treated within one week. Upon completion of all building construction associated with a piping system, the system shall be cleaned and flushed by the installation contractor using appropriate chemicals as specified by the water treatment designer and approved by COT. The cleaning operation shall be completed in agreement with a representative of the COT.

WATER TREATMENT

Water treatment contractor shall be required to record site water conditions and water meter readings for make-up and bleed-off.

Provide access for chemical cleaning and water treatment equipment and services for the following systems:
1. Hot water closed heating systems
2. Chilled water closed systems
3. Open re-circulating cooling water systems
4. Steam generating systems

DISTRICT SYSTEM CHILLED WATER HEAT EXCHANGERS

When cooling loads are provided by district system chilled water, use plate and frame heat exchangers as an interface.

FAN COIL UNITS

Fan coil units shall be submitted for prior approval by COT.

PACKAGE HEATING AND COOLING UNITS

Packaged units shall be in a location other than the roof, ceiling space or attic. Ground mounted units shall be on concrete equipment pads four inches, minimum, in height above grade.

Allow sufficient space around the unit for maintenance servicing and for adequate air flow.

Packaged equipment shall have minimum SEER ratings meeting the current model energy code. Higher efficiency equipment meeting local utility rebate program requirements shall be specified as an alternate. The total rebate available from the local utility shall be calculated and furnished to the COT. Resistance electric heat shall be avoided unless used in conjunction with heat pumps.

Where cost effective, packaged equipment shall have outside air economizers dry bulb controlled interlocked to operate multiple units. Economizers shall be supplied by the equipment manufacture if available or specifically designed for the particular equipment model.

Small sizes can be wall or window mounted with COT approval.

EVAPORATIVE COOLERS

Sidedraft evaporative coolers are preferred with mounting on their own support stands.

Evaporative coolers shall have cross fluted fiberglass media with a minimum thickness of twelve (12) inches with polybond coated metallic casing or approved equal.

Aspen pads shall <u>not</u> be used.

Bleed off shall be provided per manufacturers recommendations.

Use two (2) speed motors or VFD drives on EC motors.

Provide make-up supply water and drain ball valves inside the building. Provide local make-up water valve at each cooler. All piping shall pitch to a drain valve. Provide compression fittings on all pipes outdoors that may freeze. Provide a hose bib within 50 feet of each cooler. Cooler base shall allow water to drain.

Provide space to maintain, remove and replace coolers. A minimum of 4’-0” should be provided on all inlet sides of each cooler.

COMMUNICATION & UPS ROOMS

Provide independent HVAC for all communication rooms.

Provide EMCS temperature monitoring probes for status and/or alarms.

If primary cooling to a communications room is provided by the main building HVAC, then provide a back-up independent HVAC unit. Compensate for the building's night time HVAC shut-down cycles.

Do not install HVAC units above the communications / computer equipment rooms.

UPS rooms shall have cooling loads designed for all equipment to be installed in the room including transformers.

DUCTWORK

Ductwork shall be galvanized sheet metal above ground. Below ground ductwork shall be PVC coated galvanized sheet metal.

Ducts are to be sealed air tight with duct sealer and not tape.

Provide access doors to all equipment in the duct.

Dishwasher exhaust ducts shall be aluminum and slope to allow drainage; seal all joints to prevent leakage.

Flexible duct shall have a maximum length of 6'and installed according to SMACNA standards.

Specify ductwork pressure class appropriate for the installed system.

Fiberglass duct liners inside the ductwork are not acceptable except for fresh air or return air ductwork located outside the building.

Kitchen exhaust ductwork design shall receive a cursory review by the GSD A&E Division.

FIRE DAMPERS

Fire dampers shall be U.L. approved with blades stored out of air stream, Type B.

GRILLES AND DIFFUSERS

Provide straightening vanes behind grilles and diffusers so air can be properly directed into the space.

LOUVERS

Louvers shall prevent water entrance and have a bird screen on the outside.

FILTERS

Filters at air handling equipment shall be minimum 2” thick replaceable media. In return air ductwork or at the HVAC unit provide 2” thick filters with metal track and hinged door. When possible use 24” x 24” or 20” x 20”. Provide magnehellic pressure gauge for each filter bank handling more than 2000 cfm.

HVAC CONTROLS

Controls shall be electronic direct digital control systems compatible with existing COT wide BAC net EMCS. See Division 25 for Integrated Automation
All VFD drives for HVAC equipment shall be specified as Native BAC net ready or compatible.
VAV controls to be coupled with occupancy sensors.

Low voltage electric controls may be used for unitary systems.

The EMCS shall monitor and control outside air ventilation to maintain building IAQ. The EMCS system shall report outside air quantities for IAQ verification.

.

VIII. SECTION 238000 DESIGN REQUIREMENTS

GENERAL

HVAC load calculations shall be provided indicating the size of the mechanical system. Design day calculations should be based upon ASHRAE Standards as specified in the COT Sustainable Energy Standard available on the Development Services website.

System A/C mechanical sizing shall be limited to no more the 10% safety factor in accordance with ASHRAE 90.1 Paragraph 9.4.1.8. Internal loads (computers and other equipment) will be as mutually agreed upon by the consultant the COT for the purpose of determining the cooling load calculations.

HVAC load and sizing calculations shall be reviewed or submitted to the COT for review at major phases in the design.

All underground pipe lines shall be reviewed for adding conduit for modem connections.

All Refrigerant Piping to be pressure tested to 150 psi and shall hold pressure for 24 hours.

All horizontal Refrigerant Piping is to be rigid ACR Pipe.

All outdoor Condensing Units should be elevated on an angle iron stand 18" high.

The use of either air cooled or water cooled condensers shall be evaluated by the consultant for life cycle costs including the use of water and electricity. Also included will be the ability to meet LEED criteria.

Split systems shall be evaluated for energy conservation and other life cycle criteria. Auxiliary backup heat should be considered for all heat pumps.

NOISE AND VIBRATION

Design to latest version of ASHRAE noise and vibration standards.

Vibration shall be minimized into the structure. Set air handlers on spring isolators, set other equipment on necessary isolators to meet sound criteria and vibration elimination. Isolate pipe to prevent vibration into structure. Vibration sensors shall be evaluated for specification in air handling equipment.

ENERGY AND WATER EFFICIENCY

Minimum SEER for packaged equipment or COP for heat pumps shall meet the current industrial standard of AHRI 210/240.

Specify and design for condenser water heat exchanger cooling if possible as approved by the COT.

Specify high efficiency heating and cooling systems as approved by COT.

The consultant will ensure commissioning responsibilities are detailed in the project plans and specifications.

The facilities shall be designed for maximum efficiency in the use of both energy and COT water. The facility must be designed and constructed to meet the latest version of the Tucson/Pima County Sustainable Energy Standard (SES). The SES is available at

http://gs.tucsonaz.gov/gs/energy-office. COT has chosen to meet the SES using the LEED Silver Path for compliance.

The Consultant shall provide written technical analysis of energy conservation measures needed to meet the SES requirements (Ref. building design phase Standards for further details). The analysis must include, but not be limited to, added construction costs, energy and cost savings, changes to annual maintenance costs and life-cycle cost analysis of methods used to meet LEED requirements.

The building orientation and sun control shall be such that no direct sunlight strikes the exterior glass of spaces cooled by refrigerated air conditioning. At a minimum, double glazing of exterior openings shall be used. Mechanical equipment shall be housed in equipment rooms within the buildings. Roof penetrations shall be kept to an absolute minimum. No mechanical equipment shall be placed on the roof unless approved by COT or as stated in these Standards.

Occupancy sensors shall be used in common use areas.

OPERATION AND MAINTENANCE COSTS:

In the Design Development submission, provide HVAC, lighting and electric load calculations, and develop estimates of the cost of operating and maintaining the facilities designed under this Contract including recommended redundancy for critical operations. The estimated operation and maintenance costs are to be projected for each of the five (5) consecutive fiscal years following acceptance of the facilities by the COT.

SEQUENCE OF OPERATION

Utilize outside air controllers such as CO2 monitors when appropriate as over-ride for a minimal outside air setting. An early morning purge is recommended.

Use timers when EMCS is not available for control of mechanical systems. Control systems shall be evaluated for surge protection.

BALANCING AND TESTING

TAB shall be specified as the responsibility of the mechanical contractor.

The TAB contractor shall be specified to be present at the final walk-through with testing equipment available to spot check report information.

HVAC ACOUSTICAL DESIGN

COT expects that various options would be evaluated and the HVAC systems most beneficial to the users of the building and their purposes would be selected for implementation. Standards have been developed by ASHRAE which provide acceptable noise levels as Noise Criterion (NC) and Room Criterion (RC) curves. These have been used as industry standards for addressing noise within every environment.

EMCS

See Division 25 Integrated Automation for EMCS - City of Tucson Maintenance and Building Standards.

CATHODIC PROTECTION:

All specified cathodic protection systems will at a minimum meet NACE standard RP-0169-86 and will be active not sacrificial type systems.

IX. SECTION 238100 CONSTRUCTION

BALANCING, TESTING AND COMMISSIONING

The HVAC contractor shall hire the Independent Certified Balancing Contractor to perform TAB of the HVAC systems.

Before TAB is started, the Mechanical Contractor shall verify proper installation and operation of all HVAC systems. This verification shall include adjusting belts and sheaves, aligning all parts and providing oil and grease to bearings in accordance with manufacturer's instructions. Clean exterior surfaces of coil tubes and fins, flush interior of coil tubes until clean and check mixing damper operation to insure free operation and activation by the correct thermostat.

CONTRACTOR RESPONSIBILITIES

The mechanical and commissioning contractors shall be responsible to coordinate their work for certifying that the systems, as scheduled for TAB, are operational, functional and complete. Completeness shall include not only the physical installation, but the Mechanical Contractor's certification that the prime movers, fans, pumps, refrigeration machines, boilers, etc., are installed in good working order, and that full load performance has been preliminary tested under the certification of the OEM.

Joints are not acceptable in refrigerant piping underground unless installed in an approved chase.

Brazed solder joints in copper air conditioning refrigerant piping

shall have nitrogen purge during the brazing work.

Should the commissioning agent not be able to commission the scheduled systems, the contractor shall reimburse COT for the fair value and for extra charges.

SYSTEMS COMMISSIONING

The Mechanical Contractor shall be responsible for making all modifications to rectify discrepancies reported by the TAB Contractor.

Projects may have selected building systems commissioned. The equipment and systems to be commissioned will be specified by the COT. The commissioning process will be defined by the COT. The Contractor is responsible to assist and help execute the commissioning. The commissioning process will be directed by a Commissioning Authority whose services will be provided by the COT. ASHRAE commissioning standards will be reviewed for adoption.

TAB CONTRACTOR RESPONSIBILITIES

Test and balance contractor shall measure and adjust the outside air quantities for each air handling system.

The TAB contractor shall perform an indoor air quality verification including taking measurements at design outside air flow. Measurements shall include temperature and humidity uniformity throughout the space, checking filter installation for proper fit, proper sealing, and operation, and verify condensate drain operation. The TAB contractor shall note any water damage or obvious contamination sources from inside or outside.

The TAB contractor shall conduct air sampling tests for every individual air handling zone including:

1. Carbon dioxide
2. Carbon monoxide
3. Ozone
4. Nitrogen oxides
5. Formaldehyde

The TAB agency shall prepare a report showing the results, location, time and date of each test. A summary of the HVAC operating conditions and a listing of any discrepancies shall be provided.

When renovating existing systems, perform a pre-design TAB survey prior to design work to ensure adequate capacity.

X. TABLE OF ABREVIATIONS

ABBREVIATION	MEANING
A/C	Air Conditioning
ACR Pipe	A/C & Refrigeration grade copper tubing
AHRI	The Air Conditioning, Heating, and Refrigeration Institute,
ARI Standards	Air Conditioning & Refrigeration Institute Standards
ARI Certification Program	ARI independent laboratory testing of OEM products
ASHRAE	American Society of Heating, Refrigeration and Air-Conditioning Engineers
ASME Code	American Society of Mechanical Engineers - A standard that has been adopted by one or more governmental bodies and has the force of law.
BAC net	An ASHRAE Standard for data communication protocol for building automation and control networks.
BTUH	British Thermal Units per hour
cfm	Cubic feet per minute
CO2 monitors	Carbon dioxide monitors
COP	Coefficient of Performance
COT	City of Tucson
DDC system	Direct Digital Control system
EC	Evaporative cooler
EDT	Entering drybulb temperature
EMCS	Energy Management and Control System
EWT	Entering wetbulb temperature
°F	Degrees Fahrenheit
FM	Factory Mutual approval standards
gpm	Gallons per minute
HVAC	Heating, Ventilation and Air Conditioning
IAQ	Indoor air quality
I.R.I.	International Resource Identifiers
L10 life	Bearing life estimation based on statistics
LEED	Leadership in Energy and Environmental Design
LWT	Leaving wetbulb temperature
NACE	National Association of Corrosion Engineers
NC	Noise Criterion

NFPA	National Fire Protection Association
OEM	Original equipment manufacturer
PVC	Polyvinyl chloride (plastic pipe)
Ref.	Reference
RC	Room Criterion
SEER ratings	Seasonal Energy Efficiency Ratio (A/C efficiency standard)
SES	Sustaintable Energy Standard
SMACNA	Sheet Metal and Air Conditioning Contractors' National Association
TAB	Test and Balance
U.L	Underwriters Laboratories Inc.
UPS	Uninterruptible power supply
USACE UFGS	United States Army Corps of Engineers - Unified Facilities Guide Specifications.
UVC Lamps	Ultraviolet “C” frequency range lamps
VFD	Variable Frequency Drive

SEE ATTACHED EMCS GUIDELINES

City of Tucson
Facilities Design and Management

EMCS TECHNICAL GUIDELINE

January 10, 2002

PALMER ENGINEERS, INC.

COMFORT SYSTEMS USA
ESS Engineering

CITY OF TUCSON
ECMS TECHNICAL GUIDELINE

Prepared for:

City of Tucson
Facilities Design and Management
4004 S. Park Ave., Building 2
Tucson, Arizona 85726
Contact: Les Grant, P.E., CEM
(520) 791-5111 *phone*

Prepared by:

Palmer Engineers, Inc.
2975 N. Country Club
Tucson, Arizona 85716
(520) 326-4331

ESS engineering, Inc., a Comfort Systems USA Company
2141 E. Broadway Road, Suite 211
Tempe, Arizona 85282
(480) 784-4500

Principal **Investigators:**

James Palmer, PE – Palmer Engineers, Inc.
Loren W. Morris, PE – ESS engineering
Gordon Crissman, ESS engineering

ESS Report No. 30103.03

January 10, 2002

Copyright © 2002 by ESS engineering, Inc.

TABLE OF CONTENTS

1.0 INTRODUCTION 1

1.1 EMCS TECHNICAL GUIDELINE DOCUMENT 1

1.1.1 Section 1.0, INTRODUCTION 1

1.1.2 Section 2.0, Overview 1

1.1.3 Section 3.0, Execution 2

1.1.4 Section 4.0, Hardware 2

1.1.5 Section 5.0, EMCS Communications 3

1.1.6 Section 6.0, Software 3

1.2 SUPPLEMENTAL SPECIFICATION CONTENT 3

2.0 OVERVIEW 5

2.1 DEFINITIONS 7

3.0 EXECUTION 10

3.1 PROJECT DOCUMENTATION 11

3.1.1 Submittals 11

3.1.2 Record Documentation 14

3.2 CONSTRUCTION 16

3.2.1 Facility Security and Access 17

3.2.2 Compliance with Safety Provisions 17

3.2.3 EMCS Contractor Use of Premises 18

3.2.4 Cutting and Patching 18

3.2.5 Cleaning 19

3.2.6 Equipment Safeties and Interlocks 19

3.2.7 Electrical Field Wiring 20

3.2.8 Mechanical Work 21

3.2.9 Pneumatic Work 21

3.2.10 Decommissioning 22

3.2.11 Hazardous Materials 22

3.2.12 Progress Meetings 23

3.2.13 Labeling 23

3.3 OPERATOR TRAINING 27

3.4 EMCS COMMISSIONING 28

3.4.1 Installation Commissioning 28

3.4.2 Calibration Commissioning 29

3.4.3 Functional Commissioning 34

3.5 WARRANTY 35

3.5.1 Basic Warranty Service 36

3.5.2 Basic Warranty Check-Out 37

4.0 HARDWARE REQUIREMENTS 39

4.1 OPERATOR WORKSTATIONS 39

4.1.1 Color Report Printer 40

4.1.2 Alarm Printer 41

Copyright © 2002 by ESS engineering, Inc.

4.1.3 Uninterruptable Power Supply ... *41*
4.2 MOBILE TERMINAL STATIONS ... 41
4.3 REMOTE PROCESSING DEVICE (RPD) ... 43
4.4 APPLICATION SPECIFIC CONTROLLER (ASC) ... 45
4.5 EQUIPMENT INTERFACES ... 46
4.6 INPUT/OUTPUT POINT CHARACTERISTICS ... 46
4.6.1 Analog Input (AI) ... *46*
4.6.2 Analog Output (AO) ... *47*
4.6.3 Digital Input (DI) ... *47*
4.6.4 Digital Output (DO) ... *47*
4.6.5 Totalizer Inputs (TI) ... *48*
4.7 SENSORS AND ACTUATORS ... 48
4.7.1 Temperature Sensors ... *49*
4.7.2 Relative Humidity Sensors ... *50*
4.7.3 Pipe Flow Sensors ... *50*
4.7.4 Pressure Sensors ... *51*
4.7.5 Electric / Pneumatic Transducer ... *51*
4.7.6 Pneumatic / Electric Transducer ... *51*
4.7.7 Damper / Valve Actuators ... *51*
4.7.8 Control Valves ... *53*
4.7.9 Electrical Power and Current Transducers ... *54*
4.7.10 Current Switches ... *55*
4.7.11 Carbon Dioxide Gas Sensors ... *55*

5.0 EMCS COMMUNICATIONS ... 57

5.1 WIDE AREA NETWORK ... 57
5.2 LOCAL AREA NETWORK ... 57
5.3 BACNET REQUIREMENTS ... 59
5.3.1 Object and Name Requirements ... *59*
5.4 DEVICE OBJECT ID CONVENTION ... 60
5.5 CONTRACTOR RESPONSIBILITY ... 61
5.5.1 EMCS Contractor ... *62*
5.5.2 OWN Contractor ... *62*
5.5.3 The City of Tucson ... *63*
5.6 OBJECTS AND PROPERTIES ... 63
5.6.1 Analog Input, Output, Value ... *63*
5.6.2 Binary Input, Output, Value ... *63*
5.6.3 Loop ... *63*
5.6.4 Multi-state Input, Output ... *64*
5.7 SYSTEM RESPONSE ... 64
5.7.1 Controller ... *64*
5.7.2 Wide Area Network ... *64*
5.7.3 OW Access ... *64*
5.7.4 MTS Access ... *65*
5.8 ALARM ANNUNCIATION ... 65
5.8.1 OW Alarm Annunciation ... *65*
5.8.2 Pager System ... *65*

6.0 SOFTWARE REQUIREMENTS ... 67

6.1 OPERATOR WORKSTATION NETWORK ... 67
6.1.1 Standard Reports ... *67*

Copyright © 2002 by ESS engineering, Inc.

6.1.2 Trend Logging *69*
6.1.3 Trend Data Transmission and Storage *69*
6.1.4 Remote RPD and ASC Configuration *70*
6.1.5 Time Synchronization *70*
6.2 DYNAMIC COLOR GRAPHICS 70
6.2.1 Monitor Screen Requirements *70*
6.3 CUSTOM PROGRAMMING 71
6.3.1 Programming Language *71*
6.3.2 Mathematical and Logical Functions *71*
6.4 EMCS PROGRAMMING 72
6.5 DIRECT DIGITAL CONTROL 73
6.5.1 Control Loops *73*
6.5.2 Functions *74*
6.5.3 PID Control Loop Tuning *74*
6.5.4 Automated PID Control Tuning *74*
6.6 EMCS FAILURE MODES 75
6.6.1 Last Command (C) *75*
6.6.2 High Value (H) and Low Value (L) *75*
6.6.3 On/Open (O) and Off/Closed (F) *75*
6.6.4 Local Loop (N) *76*
6.7 EMCS ALARM STATES 76
6.7.1 Safety Alarm *76*
6.7.2 Equipment Alarm *76*
6.7.3 Change-of-State *77*
6.7.4 High and Low Limit Alarm *77*
6.7.5 Run Time Alarm *78*

Copyright © 2002 by ESS engineering, Inc.

NOMENCLATURE

AH	Air Handler
AHU	Air Handler Unit
AI	Analog Input
ANSI	American National Standards Institute
AO	Analog Output
APDU	Application Protocol Data Unit
ARP	Alarm/Report Printer
ASC	Application Specific Controllers
ASCII	American Standard Code for Information Interchange
ATU	Air Terminal Unit
AV	Analog Value
A-to-D	Analog-to-Digital
BAS	Building Automation System
BI	Binary Input
BIBB	BACnet Interoperability Building Block
BIPR	BACnet IP Router
BO	Binary Output
BV	Binary Value
CAD	Computer Aided Drafting
CHW	Chilled Water
CHWR	Chilled Water Return
CHWS	Chilled Water Supply
COV	Change of Value
CPM	Critical Path Method
CW	Condenser Water
CWR	Condenser Water Return
CWS	Condenser Water Supply
CV	Constant Volume
DDC	Direct Digital Control
DHW	Domestic Hot Water
DOS	Disk Operating System
D-to-A	Digital-to-Analog
EMCS	Energy Management and Control System
EMT	Electrical Metallic Tubing
EP	Electro-Pneumatic
EUM	End-Use Monitoring
FIC	Field Interface Controllers
HHWS	Hand Held Work Station

Copyright © 2002 by ESS engineering, Inc.

NOMENCLATURE (Cont.)

HP	Heat Pump
HVAC	Heating, Ventilating and Air-Conditioning
HWP	Hot Water Pump
HWR	Hot Water Return
HWS	Hot Water Supply
IBM	International Business Machines, Inc.
IEEE	Institute of Electrical and Electronics Engineers
I/O	Input/Output
ISO	International Organization for Standardization
LAN	Local Area Network
MAC	Media Access Control address
MHz	Megahertz
MS	Microsoft®, Inc.
MS/TP	Master-Slave/Token-Passing
MTS	Mobile Terminal Station
NEMA	National Electrical Manufacturers Association
NIST	National Institute of Standards and Technology
NFPA	National Fire Protection Association
OCC	Occupied
OW	Operator Workstation
OWN	Operator Workstation Network
PC	Personal Computer
PCWS	Personal Computer Workstation
PICS	Protocol Implementation Conformance Statement
PID	Proportional-Integral-Derivative
PTP	Point-to-Point
RAM	Random Access Memory
RPD	Remote Processing Devices
RTU	Remote Terminal Unit
RW	Remote Workstation
TDR	Time Delay Relay
TIA/EIA	Telecommunications Industries Association/ Electronic Industries Association
UNOCC	Unoccupied
VT	Virtual Terminal
WAN	Wide Area Network

Copyright © 2002 by ESS engineering, Inc.

1.0 INTRODUCTION

A. This Energy Management and Control System (EMCS) Technical Guideline provides the minimum requirements for future facility control systems to be successfully integrated into the existing EMCS. However, the EMCS Specification is made up of two (2) parts; the first part (Part 1) is this EMCS Technical Guideline and the second part (Part 2) is the EMCS Supplemental Specification. Combined, these two (2) parts make up the entire EMCS Specification that the Mechanical Consultant or the party so designated by the COT will submit to the COT for insertion into the project contract documents.

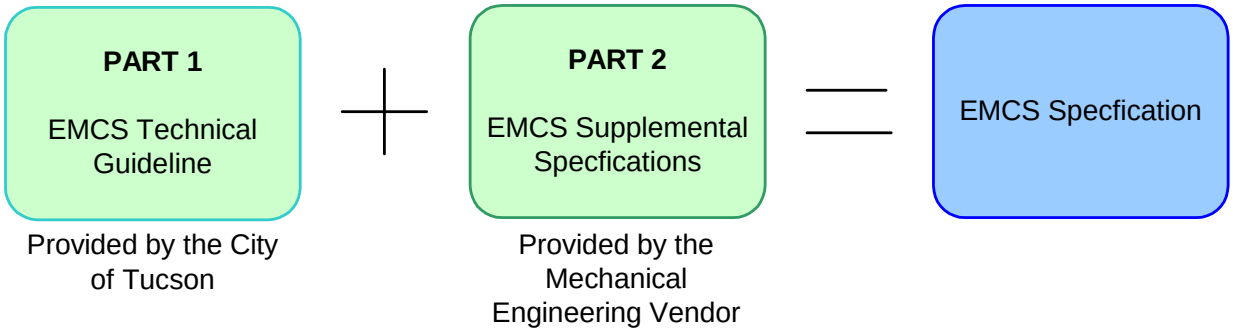

1.1 EMCS TECHNICAL GUIDELINE DOCUMENT

A. Each section of the EMCS Technical Guideline outlines necessary tasks to ensure a successful integration of the facility(s) control system into the EMCS. The following paragraphs outline critical issues addressed in each section of the Specifications.

1.1.1 SECTION 1.0, INTRODUCTION

A. This section contains this Introduction that highlights critical points within the EMCS Technical Guideline.

1.1.2 SECTION 2.0, OVERVIEW

A. This section provides the overall description of the existing integrated EMCS provided under City Contract No. 001161. Key items included in this section include:

Copyright © 2002 by ESS engineering, Inc.

TABLE 1
CRITICAL OVERVIEW ITEMS

Section	Paragraph (Page)	Comment
2.0	C (P.5)	Notice the reference to the Supplemental Specifications
2.0	D (P. 5)	At this time, the OWN Contractor is Climatec. The City will be required to negotiate the integration fees for each building added to the EMCS separate from the scope of work internal to the building(s).
2.0	E (P.5)	The EMCS Contractor is the vendor that will perform project specific scope of work internal to the building(s).

1.1.3 SECTION 3.0, EXECUTION

A. This section outlines the content of the EMCS Contractor's deliverables during the construction process. These deliverables include submittals, as-built documentation, and commissioning reports. In addition, construction practices and methods are outlined for operator training, commissioning, and warranty checkout. The following items should be noticed:

TABLE 2
CRITICAL EXECUTION ITEMS

Section	Paragraph (Page)	Comment
3.0	B (P.11)	Outlines the contents of the supplemental Specifications to be provided by the City or its designated consultant
3.0	D thru F (P.11)	Requirements for the use of existing equipment.
3.1.1	General (PP. 12-16)	Outlines the content of the submittals
3.1.1	A (P. 12)	Six (6) copies are specified. If more copies are required, the correction should be made in the Supplemental Specifications.
3.2.13	Labeling (PP. 24-28)	Establishes the EMCS labeling requirements.
3.3	General (PP. 28-29)	Pertains to the operator training requirements. Specific quantity of training hour should be included in the Supplemental Specifications.
3.4	General (PP. 28-36)	Distinguishes between Installation, Calibration, and Functional Calibration.
3.5	General (PP. 37-38)	Outlines Warranty requirements. Revisions should be included in the Supplemental Specifications.

1.1.4 SECTION 4.0, HARDWARE

A. This section outlines the requirements for the control hardware, e.g., workstations, controllers, and gateways. End device hardware, e.g., sensors, valves, and actuators, are also included. Close review of the specified tolerances contained therein should be performed. Additions and/or revisions to the hardware required and their respective performance requirements should be made in the Supplemental Specifications.

Copyright © 2002 by ESS engineering, Inc.

1.1.5 SECTION 5.0, EMCS COMMUNICATIONS

A. BACnet, ASHRAE Standard 135-1995, is specified as the communications protocol for the EMCS. However, strict vigilance is needed in the review of submittals to ensure that a system is properly integrated into the EMCS, even if the installed system is "native BACnet". Key items included in this section are shown on the following page:

TABLE 3
CRITICAL COMMUNICATIONS ITEMS

Section	Paragraph (Page)	Comment
5.1	General (P.57)	Outlines the OWN Contractor's duties regarding the WAN backbone and integration.
5.3	General (P.59)	Outlines the BACnet requirements for the hardware control devices defined.
5.3.1	General (PP. 59-60)	Outlines the convention for naming each point within the EMCS. The controls vendor must adhere to this standard to ensure no conflicts occur during the integration process.
5.4	General (PP. 60-61)	Outlines the convention for numbering each BACnet controller on the EMCS. The controls vendor must adhere to this standard to ensure no conflicts occur during the integration process.
5.5	Contractor Responsibility (PP. 61-63)	Defines the general responsibly between the EMCS Contractor, OWN Contractor and the COT to ensure a successful EMCS integration.

1.1.6 SECTION 6.0, SOFTWARE

A. This section outlines the software requirements to implement standard monitor and control capabilities throughout the City's facilities. This includes standard report formats, trends, data storage, graphics, and programming. Key items included in this section include:

TABLE 4
CRITICAL SOFTWARE ITEMS

Section	Paragraph (Page)	Comment
6.2	General (P. 70)	Outlines the coordination between the OWN Contractor and the EMCS contractor. Provides the deliverables required for successful integration. Additional items needed should be included in the Supplemental Specifications.
6.2.1	Monitor Screens (PP. 70-71)	Outlines the requirements for specific features on monitor screens developed for the COT.

1.2 SUPPLEMENTAL SPECIFICATION CONTENT

A. As mentioned in the previous section, several items will be required in the Supplemental Specification to customize the EMCS Technical Guidelines to each building's scope of work. These items include, but are not limited to the following:

Copyright © 2002 by ESS engineering, Inc.

1. **RFP Documentation** – Includes the City's standard contractual documentation and specific proposal requirements.

2. **Scope of Work Description** – Detailed description of the scope of work to be performed by the contractor(s). Includes add-alternates, if applicable.

3. **Input/Output Point Summary Tables** – a complete listing of the required input and output points, their type (analog or binary), and any special parameters associated with the point(s).

4. **Control Schematics** – Drawings of each system and corresponding input and output points.

5. **Sequence of Operation** – Includes the sequence of operation for each system to be controlled by the building's control system.

6. **Project Specific Information** – Any information needed by the Contractor to estimate and perform the scope of work. This may include information regarding building contacts and access. In addition, any specific requirements corresponding to the sections of the EMCS Technical Specifications should be included, e.g., training hours and warranty period.

Copyright © 2002 by ESS engineering, Inc.

2.0 OVERVIEW

A. This Technical Guideline defines the minimum hardware, software and functional performance requirement of the integrated computer-based Energy Management and Control System (EMCS) for the City of Tucson (COT).

B. The City's current EMCS configuration includes a Wide Area Network (WAN) consisting of a combination of fiber optic cabling, T-1, and frame relay used as the transport mechanism for EMCS inter-building communications. ANSI/ASHRAE Standard 135-1995, BACnet, shall be the communications protocol used on the WAN as well as within each individual building to the Remote Processing Device (RPD) level. The Operator Workstation Network (OWN) consists of two (2) Alerton front-ends and two (2) Mobile Terminal Stations (MTS) running, Alerton Technologies, Inc., BACtalk™ for Windows software.

C. EMCS Supplemental Specification(s)are required to complement this EMCS Technical Guideline. The EMCS Supplemental Specification(s) shall contain definition of work required by subsequent phases of the original installation. Additionally, the EMCS Guideline and Supplemental Specification(s) are complemented by other contractual documents furnished by the City. In areas where specific requirements of Technical Guidelines or Supplemental Specification(s) are in conflict with the requirements set forth within City furnished documents, the more extensive and / or cumulative requirements shall apply.

D. The OWN Contractor is currently Climatec, Inc., Tucson Arizona.

E. The EMCS Contractor for the City Contract 001161 was also. through Climatec, Inc., Tucson Arizona.

F. Figure 1.1, on the following page, illustrates the City's existing EMCS architecture.

Copyright © 2002 by ESS engineering, Inc.

FIGURE 1.1
CITY OF TUCSON EMCS ARCHITECTURE

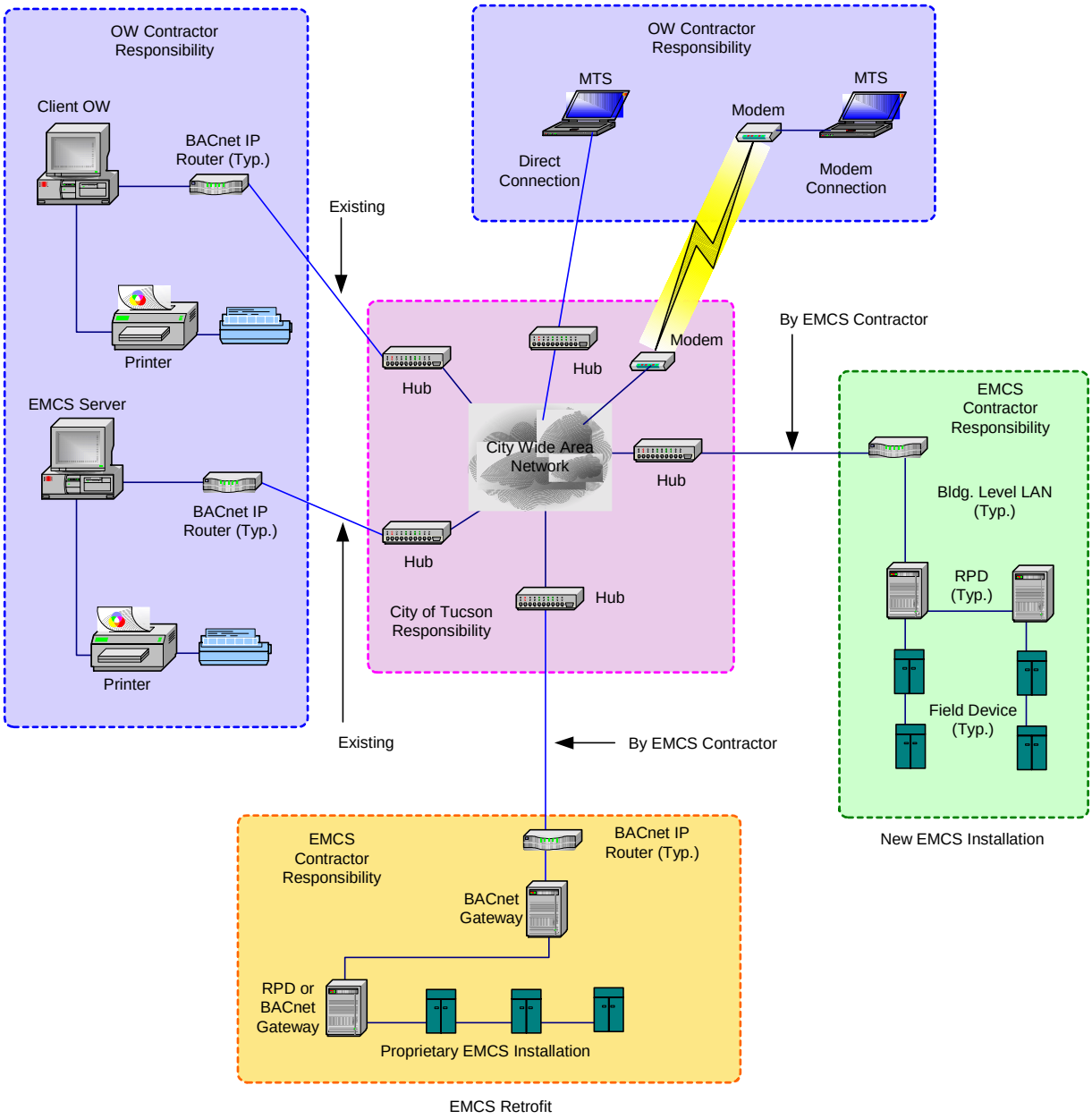

Copyright © 2002 by ESS engineering, Inc.

2.1 DEFINITIONS

A. Here and throughout the Technical Guideline, the term "City" refers to the City of Tucson/or it's specifically assigned representative.

B. Within the Specification, the following terms and definitions shall apply:

1. *Application Protocol Data Unit (APDU):* A unit of data specified in an application protocol and consisting of application protocol control information and possible application user data (ISO 9545).

2. *BACnet/BACnet Standard*: BACnet communication requirements as defined by ASHRAE/ANSI 135-1995 and all approved addenda.

3. *EMCS Contractor:* EMCS Contractor operating under contract with the City to satisfy all or part of this EMCS Technical Guideline and the Supplemental Specification(s). This definition is inclusive of any and all sub-EMCS Contractor(s) hired by each EMCS Contractor.

4. *Change of Value (COV):* An event that occurs when a measured or calculated analog value changes by a predefined amount (ASHRAE/ANSI 135-1995).

5. *Client:* A device that is the requestor of services from a server. A client device makes requests of and receives responses from a server device.

6. *Continuous Monitoring:* A sampling and recording of a variable based on time or change of state (e.g. trending an analog value, monitoring a binary change of state).

7. *Controller:* Any microprocessor based EMCS component capable of executing EMCS control functions inclusive of Remote Processing Devices (RPDs), Application Specific Controllers (ASCs), Equipment Interfaces, and/or any other similar EMCS components.

8. *Failure:* The permanent, chronic, and/or randomly intermittent cessation of proper function or performance of any EMCS component including any and all materials, hardware and/or software provided per the work defined by the EMCS Specification.

9. *Field*: Refers to those aspects of the EMCS involving the field installation and/or the hardware associated to specific input/output monitoring and control capabilities.

Copyright © 2002 by ESS engineering, Inc.

10. *Furnish:* To supply and deliver to project site, ready for unloading, unpacking, assembly, and installation.

11. *Gateway:* A device, which contains two or more dissimilar networks, permitting information exchange between them (ASHRAE/ANSI 135-1995).

12. *Install:* Describes operations at the project site(s) including unloading, unpacking, assembly, erection, placing, anchoring, applying, working to dimension, finishing, curing, protecting, cleaning, and similar operations, as applicable in each instance.

13. *Legacy System(s):* Pre-BACnet monitoring and/or control systems currently installed within the City's buildings.

14. *Local and/or Building:* Those aspects of the EMCS pertaining to, and/or residing within individual buildings.

15. *Master-Slave/Token Passing (MS/TP):* Data link protocol as defined by the BACnet standard.

16. *OWN Contractor:* EMCS Contractor operating under contract with the City to maintain, support, and configure the existing Operator Workstation Network (OWN).

17. *Point-to-Point (PTP):* Serial communication as defined in the BACnet standard.

18. *Project Manager*: Identified City's agent(s).

19. *Protocol Implementation Conformance Statement (PICS):* A written document, created by the manufacturer of a device, which identifies the particular options specified by BACnet that are implemented in the device (ASHRAE/ANSI 135-1995).

20. *Provide:* To furnish and install, complete and ready for intended use, as applicable in each instance.

21. *Remote*: Refers to those aspects of the EMCS involving the field installation and/or the hardware associated to specific input/output monitoring and control capabilities.

22. *Router:* a device that connects two or more networks at the network layer (ASHRAE/ANSI 135-1995).

23. *Server:* A device that is a provider of services to a client. A client device makes requests of and receives responses from a server device.

24. *Specification and/or Technical Specification:* This EMCS Technical Specification and all other referenced documents, codes, and/or standards.

Copyright © 2002 by ESS engineering, Inc.

25. *Standard Products*: Products approved and supported by the EMCS manufacturer for use with manufacturer's equipment.

26. *Supplemental Specification(s)*: Project-specific specification(s) providing supporting details pertinent to the scope of work.

27. *Vendor:* The manufacturer of the EMCS equipment being provided by a specific EMCS Contractor participating in this project. It is anticipated that the participating EMCS Contractor will be representing a single vendor's EMCS equipment. Specification language generally reflects this assumption; however, said language is not intended to prevent a multi-vendor offering by a single EMCS Contractor.

Copyright © 2002 by ESS engineering, Inc.

3.0 EXECUTION

A. The EMCS Contractor shall provide for all EMCS hardware and software, operator input/output devices, relays, actuators, Remote Processing Devices (RPD), Application Specific Controllers (ASC), sensors, modems, data transmission media, wiring, electrical power interface/connections, installation labor, installation supervision, calibration, testing, documentation, operator training and warranty service required by the scope of work defined within the Supplemental Specification(s) to provide for a complete, fully functional, and operational EMCS.

B. The EMCS Contractor shall provide and install an EMCS that fulfills the requirements of this Specification and Supplement Specification(s). Supplemental Specification(s) shall provide the I/O point requirements, control schematics, and sequences for the current scope of work.

C. It is the City's desire that the EMCS Contractor utilize existing EMCS sensors, wiring, raceways and pneumatic signal lines, if applicable, to the greatest extent possible in order to provide a cost-effective and specification-compliant EMCS installation.

D. It shall be the responsibility of the EMCS Contractor to verify the installation of such existing all equipment and to assess the operational compatibility of any existing equipment with the EMCS Contractor's product line and the requirements of this Technical Guideline. If such existing equipment is not compatible with the EMCS Contractor's product line or does not meet the requirements of this Technical Guideline or Supplemental Specification(s), it shall be the EMCS Contractor's responsibility to provide all new equipment, modifications and labor required to meet the requirements of the Specification.

E. At the time of proposal, the EMCS Contractor may provide in writing specific exceptions to the Specification which are offered in the interest of fostering the City's desire to re-use existing equipment. Existing input sensors may be considered compliant with the instrumentation requirements defined within Section 4.7 of the Specification unless otherwise noted.

F. The EMCS Contractor shall be responsible to warrant and service any such existing points subsequent to interface or termination to the EMCS equipment installed as per the scope of work, as defined in the Supplemental Specification(s), unless specific exceptions are noted at the time of proposal. The EMCS Contractor shall be responsible for said warranty and service in terms of routine maintenance, interface to the EMCS, and required calibration of said existing equipment as defined in Section 3.4.

G. All EMCS and microprocessor-based products provided shall be new, currently under manufacture by their respective suppliers, and shall be of latest product line generation available. The EMCS Contractor shall not install any "alpha" or "beta" products without the explicit written approval of the City.

Copyright © 2002 by ESS engineering, Inc.

H. The EMCS Contractor and OWN Contractor shall provide the City with all login and password protection codes prior to closing out the project for any devices so protected during the installation.

3.1 PROJECT DOCUMENTATION

A. The EMCS Contractor shall provide all documentation described below. Upon review by the City, the EMCS Contractor shall take corrective actions and resubmit affected documentation within one (1) week of receipt of the City' comments.

3.1.1 SUBMITTALS

A. The EMCS Contractor shall deliver six (6) copies of all submittals described within this Section to the attention of the City's assigned Project Manager. Each submittal package shall be clearly marked to indicate the scope of work addressed and date and revision number. Drawings shall be a minimum size of 11" X 17" and in DWG or DXF format.

B. Submittals defined herein shall be submitted within the period defined within the Supplemental Specifications.

C. Installation work shall not proceed without written submittal approval of EMCS Drawings, Points List, and Equipment List. Control software implementation shall not proceed without written submittal approval of Software Descriptions and Address List.

3.1.1.1 EMCS Drawings

D. A complete set of system drawings and schematics that define the overall system architecture and installation of the EMCS shall be provided. Schematic drawings shall include "one-line" representations of all EMCS monitored and/or controlled systems, associated I/O's and termination/relay ladder diagrams for all equipment interconnections. Drawings shall be a minimum size of 11" X 17" and in DWG or DXF format.

3.1.1.2 Points List

A. Under a separate cover, the EMCS Contractor shall provide a complete list of all points associated with the EMCS. The Points List shall be presented in a format that identifies each RPD and ASC, the points to which it is connected and the input/output device and/or equipment associated with each point. All I/O points shall be configured in compliance with the BACnet standard as per Section 5.3.

B. The points list shall also identify the proposed name(s)/description(s), display units, alarm limit(s)/definition, and BACnet object description, including object ID and device ID, for each

Copyright © 2002 by ESS engineering, Inc.

I/O point. Documentation for any non-standard BACnet objects, properties, or enumeration utilized shall be submitted to the City including their structure, data types, and any associated enumeration values.

C. I/O point names shall follow a consistent format for differentiating between building and systems to the greatest extent possible. Point naming conventions shall be coordinated with the City. Point names shall be at a minimum, eight (8) alphanumeric characters. The I/O Point Listing shall be provided on computer diskette and be in MS-Excel or other approved format.

3.1.1.3 Software Descriptions

A. The EMCS Contractor shall provide a complete set of Software Descriptions (control sequences) that details the algorithms to be implemented by all control and application programs.

B. The Software Descriptions shall be furnished in an English language format that demonstrates the EMCS Contractor's understanding and interpretation of the control requirements contained within the Specification.

C. Program inputs and outputs shall be clearly referenced within each Software Description including both physical (hardware) and operator assignable/adjustable (software) setpoints and parameters. All said hardware and software points shall be presented per the points list requirements of Section 3.1.1.2.

3.1.1.4 Address List

A. A complete list of WAN and/or LAN connections shall be provided by the EMCS Contractor for each site within the scope of work defined within the Supplemental Specification(s). The said list shall include the location of each connection, whether the connection needs an IP address, and the address type (static or dynamic). The EMCS Contractor shall provide as part of this list, floor plans displaying the connection location in each floor and/or building. All connections and connection locations shall be developed in coordination with the City.

3.1.1.5 Commissioning Report Templates

A. The EMCS Contractor shall submit Commissioning Report Templates to the City for approval. The templates shall be used to document the results of the EMCS Contractor's verification of proper system installation, component calibration, and functional performance.

B. The Installation Commissioning Template will document the results of the EMCS Contractor's verification of a Specification-compliant hardware installation. Upon approval, the EMCS Contractor shall utilize the Template on a system-by-system basis. Reference Section 3.4 for

Copyright © 2002 by ESS engineering, Inc.

specific requirements. At a minimum, this Template shall be used to document verification of system communication, installation, and construction practices of the following:

1. OW/RPD/ASC/Equipment communication
2. EMCS component installation
3. Mechanical and Electrical interface

C. The Calibration Commissioning Template shall be used to document the results of Specification-compliant EMCS component calibration and testing, and shall include all test instrument certifications along with field calibration data and results. This Template shall also be used to document all requirements of sensor calibration and controlled device testing as specified in Section 3.4.2.

D. The Functional Commissioning Template shall be used to document the results of Specification-compliant software and application programming through graphical representations of trended data. The Template shall be utilized on a system-by-system basis. Reference Section 3.4.3 for specific Requirements. At a minimum, this Template shall be used to document verification of the following system sequences:

1. Setpoint / ambient condition response
2. Sequence & Operation
3. Power failure response
4. Alarm annunciation
5. Trending

3.1.1.6 Equipment List

A. The EMCS Contractor shall provide a complete list and technical specification data (cut-sheets) for all equipment to be provided. This Equipment List shall include all system components including sensors, actuators, relays, controllers, RPD's ASC's, wire, pneumatic tubing, enclosures, host hardware and associated power supply and communications surge and over-voltage protection equipment. The Equipment List shall include quantities of all equipment to be supplied and shall be segregated by logical systems. A Protocol Implementation Conformance Statement (PICS) for each BACnet microprocessor-based device shall also be submitted.

Copyright © 2002 by ESS engineering, Inc.

3.1.1.7 Equipment Labels

A. The EMCS Contractor shall provide a complete list of all labels to be affixed to newly installed EMCS equipment. At a minimum, said labeling shall include:

1. Controller enclosures
2. Controller modules
3. Conduit
4. Point-to-point field wiring
5. Controlled/monitored equipment
6. Warning labels for automated starters and control panels

B. The EMCS Contractor shall provide actual scale drawings of typical labels with the proposed names, as they will appear on the equipment.

3.1.1.8 Operator Training Plan

A. The Operator Training Plan shall detail the procedure the EMCS Contractor will follow to satisfy the operator training requirements of Section 3.3. The Operator Training Plan shall include an outline of the lesson plans for each of the various classes proposed and the schedule, location, and duration of the classes.

3.1.1.9 EMCS Documentation

A. The EMCS Contractor shall provide all manuals containing technical specifications, operating instructions, installation and removal instructions, programming instructions, maintenance and calibration procedures, and trouble-shooting guides for all EMCS components provided as per the scope of work outlined in the Supplemental Specification(s). At a minimum, the EMCS components addressed shall include RPD's, ASC's, workstation hardware and software, I/O sensors, transducers, transmitters and other associated devices.

B. Six (6) complete sets of said documentation shall be provided. Each manual shall be provided in hard cover, loose-leaf type binders and be clearly and professionally titled on both its side and front cover. Each manual shall have a table of contents, index, and tab sheets to divide sections.

3.1.2 RECORD DOCUMENTATION

A. Prior to EMCS system acceptance by the City (and release of final retainage), the Contractor shall provide six (6) complete sets of Record Documentation per building as described herein.

Copyright © 2002 by ESS engineering, Inc.

B. All submittal requirements defined in Section 3.1 shall be inclusive of the requirements of this section. All submittals noted shall be updated and provided as part of the Record Documentation defined herein.

C. Upon completion of the installation and commissioning, the EMCS Contractor shall provide all documentation described below. Upon review by the City, the EMCS Contractor shall take corrective actions and resubmit affected documentation within one (1) week of receipt of City's comments.

3.1.2.1 Commissioning Report

A. The EMCS Contractor shall submit Commissioning Reports that document the results of verification of a Specification-compliant system installation and validation of functional performance. At a minimum, the Report shall include all items addressed within EMCS Commissioning Section 3.4.

B. The Reports shall clearly indicate the calibration of EMCS inputs and outputs as specified within individual hardware Sections, and demonstrate that the EMCS Contractor has satisfied all Input/Output and all other associated component installation.

C. Functional performance shall be documented by graphical reports of trend data of input and output points for systems under EMCS monitoring and/or control. Trends shall be for a continuous thirty (30) day period of no more than fifteen (15) minute intervals and be provided on diskette in MS-Excel or other approved format.

3.1.2.2 Record Drawings

D. The EMCS Contractor shall provide Record Drawings and Schematics (As-Builts) of the complete EMCS installation for all systems. The Schematic Drawings shall illustrate the final EMCS architecture, configuration, and input/output point installation for all systems monitored and/or controlled via the EMCS. The EMCS Contractor shall provide a softcopy of all EMCS record drawings in DWG or DXF format and a hardcopy of record drawings in 18” X 24”.

E. The drawings shall detail the locations and routing of all communications and sensor wiring/cabling, sensor locations and all other EMCS components installed. The Record Drawings shall indicate the location of all field sensors (remote to primary HVAC equipment) on "to-scale" floor plans.

3.1.2.3 Program Records

A. The EMCS Contractor shall provide complete program descriptions of all control and application software provided as per the EMCS installation. The program descriptions shall

Copyright © 2002 by ESS engineering, Inc.

include complete source code listings, flow charts and English language explanations of all control/application programs that are associated with equipment control as specified herein.

3.2 CONSTRUCTION

A. The EMCS Contractor shall perform all EMCS Installation Work in accordance with all local and state ordinances and codes relevant to the scope of services provided. The EMCS to be provided shall be engineered, manufactured, tested, and installed in a manner to satisfy or exceed the requirements of the current editions of NEMA, ANSI, UL, and NFPA standards including:

1. National Electric Code - NFPA 70
2. UL Listing 916 - Energy Management Systems
3. BACnet ANSI/ASHRAE Standard 135-1995
4. International Building Code-IBC
5. City Codes as applicable
6. Uniform Mechanical Code
7. Occupational Safety and Health Administration - OSHA

B. The EMCS Contractor shall be responsible for obtaining any and all permits and/or inspections required for the scope of work defined within the Supplemental Specification(s). The City shall be provided copies of all permits, inspection certificates, or related documents obtained by the EMCS Contractor as required for ordinance and/or code.

C. All work and equipment provided either outside any building structure, penetrating any building structures or otherwise exposed to ambient conditions shall be performed and constructed to provide a weather-tight installation. In addition, all RPD's, related EMCS components, pneumatic devices and related components shall be contained in fully hinged and latched metal cabinets which meet or exceed the NEMA Type 1 Standard and be of ample size to facilitate installation and service

D. The EMCS Contractor may be permitted to offer EMCS product and/or equipment substitutions or alternates from approved submittals throughout the contract period upon approval of the City. The EMCS Contractor may request the use of such substitutions or alternates to accommodate new products and or improvements of previously approved products that offer comparable benefits or improvement to the EMCS design without compromise to the specifications accepted at time of contract award.

Copyright © 2002 by ESS engineering, Inc.

E. The EMCS Contractor shall be responsible for assessing the operational function and integrity of all existing sensors, actuators and other related valves and actuators that may be interfaced to the EMCS for the monitoring and/or control functions specified. The EMCS Contractor shall notify the City (in writing) of any inoperable, damaged or malfunctioning existing valves or actuators at least fourteen (14) calendar days prior to EMCS interface to the device.

F. The EMCS Contractor shall coordinate and verify with HVAC equipment manufacturers any and all internal control circuit modifications and/or connections to be performed to satisfy the Specification. The EMCS Contractor shall not perform any such modifications, connections and/or termination of EMCS equipment to said HVAC equipment without receiving written approval from the equipment manufacturer and the City.

G. On existing buildings undergoing EMCS retrofit the EMCS Contractor shall inspect the work area fourteen (14) days prior to the EMCS Contractor's scheduled work, and report to the City any and all observed malfunctions, safety hazards and/or electrical/mechanical code violations of existing EMCS associated equipment and systems. If said hazards and/or violations affect the EMCS Contractor's work schedule, the City shall have said hazards and/or violations repaired and/or remedied within fourteen (14) days. Upon the EMCS Contractor's use of existing EMCS, electrical and mechanical equipment and wiring systems, the EMCS Contractor shall take full code-compliant responsibility of said equipment or systems to the extent in which the EMCS Contractor has affected work as specified herein.

3.2.1 FACILITY SECURITY AND ACCESS

A. The EMCS Contractor shall coordinate with the City, and adhere to all Security and Access requirements within the grounds, parking areas, facility, and/or tenant spaces. Additionally, during the construction period the EMCS Contractor shall coordinate all sub-EMCS Contractor security and access requirements with the City.

3.2.2 COMPLIANCE WITH SAFETY PROVISIONS

A. The EMCS Contractor shall be responsible for the safe performance of the work with due regard for the safety of the EMCS Contractor's employees, the general public, the City's employees, building tenants, and property.

B. The EMCS Contractor shall at all times be solely responsible for complying with all applicable laws, including OSHA regulations and ordinances in connection with the work including those relating to the safety of persons and/or property. In addition, EMCS Contractor shall comply with all safety policies and procedures established by the City.

Copyright © 2002 by ESS engineering, Inc.

3.2.3 EMCS CONTRACTOR USE OF PREMISES

A. The EMCS Contractor shall limit the storage of materials and equipment on-site to specific areas approved by the City. At no time during the work under the contract shall the EMCS Contractor place, or cause to be placed, any material or equipment at any location that would impede or impair access to or from the facilities.

B. The EMCS Contractor shall send proper notices, make all necessary arrangements, and perform all services required in the care and maintenance of building utilities to the extent that these utilities may be affected and/or interrupted by the EMCS installation work. The EMCS Contractor shall, during the construction period and until final acceptance of the work by the City, assume all responsibility concerning the same for which the City may be liable. Building utilities shall include telephone/telecommunications, electrical service, natural gas, central heating and cooling water and any other utilities necessary for building operation and occupant comfort and safety.

C. It is of paramount importance that the work of the EMCS Contractor provide no or limited interference with the normal operation of existing building operations, utility and/or maintenance services. All work affecting building operations, utilities and/or maintenance services shall be coordinated with the City. The EMCS Contractor shall perform EMCS installation work requiring building operations, utility and/or maintenance service interruption during evenings. The EMCS Contractor shall coordinate and schedule any shutdowns or interruptions with the City's Project Coordinator. Notification of at least seven (7) calendar days prior to any interruption during the City's operating hours is required.

D. If construction is required during 2nd and/or 3rd shifts the COT will provide security personnel.

3.2.4 CUTTING AND PATCHING

A. The EMCS Contractor shall be responsible for all cutting, fitting and patching that may be required to complete the current scope of work defined within the Supplemental Specification(s) and to neatly and professionally integrate the repair into the existing structure and finishes.

B. The EMCS Contractor shall not damage or endanger any portion of existing building operations or any separate EMCS Contractor's work by cutting, patching or otherwise altering any work. The EMCS Contractor shall not cut or otherwise alter the work or property of the City or any separate EMCS Contractor except with the written consent of the City and of such separate EMCS Contractor. The EMCS Contractor shall not unreasonably withhold from the City or any separate EMCS Contractor his/her consent to alter the work required of this contract.

C. The EMCS Contractor shall hold any cutting, fitting or patching of new work to the absolute minimum. Should cutting, fitting or patching become necessary, it shall be performed to the

Copyright © 2002 by ESS engineering, Inc.

minimum requirements as herein stated. Structural elements shall not be cut without the written consent of the City.

D. In all cases, the EMCS Contractor shall exercise extreme care in cutting operations, and perform such operations under adequate supervision by competent mechanics skilled in the applicable trades. Openings shall be neatly cut and shall be kept as small as possible to avoid unnecessary damage. Careless and/or avoidable cutting or damaging shall not be tolerated, and the EMCS Contractor shall be held responsible for such avoidable or willful damage.

E. All replacing, patching and repairing of all materials and surfaces cut or damaged in the execution of the work shall be performed by experienced mechanics of the trades involved. Such replacing, repairing and/or patching shall be done with the applicable materials, in such a manner that all surfaces so replaced or repaired shall, upon completion of the work, match the surrounding similar surfaces. Additionally, penetrations through any fire rated assembly shall be repaired and/or sealed in such a manner as to meet or exceed the assembly's original requirements.

3.2.5 CLEANING

A. During the construction period, the material to be used in the scope of work defined within the Supplemental Specification(s) shall be stored in an orderly manner. The EMCS Contractor shall clean-up daily all refuse, rubbish, scrap materials, and debris caused by operations, such that at all times the site of the work shall present a neat, orderly, and professional appearance.

B. The EMCS Contractor shall provide for the disposal of all waste products, trash and debris and make necessary arrangements for legal disposal of same off the site. Waste materials shall be lowered from upper floors in a controlled manner.

C. The EMCS Contractor shall use only cleaning materials recommended by the manufacturer of the surfaces to be cleaned and on surfaces recommended by the cleaning material manufacturer.

3.2.6 EQUIPMENT SAFETIES AND INTERLOCKS

A. The EMCS Contractor shall perform all field wiring and circuit connections between the EMCS and HVAC equipment in a manner which neither limits nor circumvents the proper and independent operation and/or function of any and all existing fire and/or smoke control systems, over/under pressurization alarming systems, equipment interlocking, and/or other related safety devices.

B. The City may request the EMCS Contractor to perform operational tests that shall confirm the operability of said safety functions subsequent to the completion of the scope of work by the EMCS Contractor.

Copyright © 2002 by ESS engineering, Inc.

3.2.7 ELECTRICAL FIELD WIRING

A. All field wiring within mechanical and electrical rooms, and central plants shall be provided within EMT conduit or approved equivalent. Furthermore, all field wiring in other than these areas that is exposed or vulnerable to damage shall be provided in EMT conduit or approved equivalent. This requirement applies to all input/output sensors; communications and electrical power supply wiring and cabling. Outdoor field wiring shall be secured in rigid metal conduit unless otherwise approved by the City.

B. Only EMCS factory trained individuals shall accomplish all final equipment, panel and device terminations.

C. The use of plenum cable within enclosed plenum spaces other than equipment rooms shall be acceptable if allowed by all local codes. Concealed cabling shall be well supported (no more than six (6) foot spans) and attached to ceiling supports or to the building structure. Cabling shall not be laid directly upon, or remain unsupported on ceiling system support grids or attached to ceiling grid hanger wiring.

D. All field wiring shall be neatly and professionally installed with conduit and cable "runs square" to room and/or building lines. Wiring/conduit at field devices shall be properly terminated and neatly arranged to allow for future servicing and/or replacement of devices.

E. Each Remote Processing Device (RPD) shall be furnished with a wiring identification schematic and input/output point listing properly protected and secured within the RPD. All field wiring shall be properly labeled at each end for easy reference to the identification schematic. All power wiring shall be neatly labeled to indicate service, voltage and breaker source. Conduit shall be labeled to indicate service at intervals of not more than fifty (50) feet and on all junction box covers.

F. An isolated circuit clearly marked at its source and at the controller with no other loads attached to the circuit shall provide electrical service to each RPD or ASC and/or group of controllers. The location of the circuit breaker shall be clearly identified in each controller serviced by it. If a spare circuit is not available within an electrical panel, the City shall reimburse the EMCS Contractor for providing equipment and labor necessary to supply an isolated circuit. RPD's or ASC's controlling only packaged air conditioning equipment may be powered directly from the packaged unit's control circuit. Emergency powered circuits shall also feed RPD's or ASC's serving equipment fed from emergency powered circuits.

G. The EMCS Contractor shall utilize existing conduit/raceway paths and spare wiring to the greatest extent possible. Use of existing raceways and wiring shall be contingent upon the raceways and wiring meeting the manufacturer's minimum requirements. It shall be the EMCS Contractor's responsibility to work with the City on locating spare wiring and/or raceways. The EMCS Contractor shall provide and install all short-haul modems and/or other related communications equipment required.

Copyright © 2002 by ESS engineering, Inc.

H. Electrical grounding shall comply with all applicable code requirements. All electrical equipment shall utilize a single point of grounding method that ensures a uniform potential on all grounded components.

3.2.8 MECHANICAL WORK

A. The EMCS Contractor shall be responsible for performing all Mechanical Work required by the Specification and Supplemental Specification(s). Mechanical Work may include the installation of valves, automatic valve-motors, and actuators. All valve-motors and actuators furnished shall be either electrically or pneumatically actuated as specified and be compatible with the application defined.

B. The EMCS Contractor shall furnish and install automatic damper, valve-motors and actuators as specified. The EMCS Contractor shall perform Mechanical Work, adjustments and modifications as required accommodating the motor-damper installations and providing mechanical linkages and other auxiliary components as required insuring a proper and serviceable installation. All mechanical work shall be performed in a neat and professional manner and in compliance with applicable NFPA and U.M.C. requirements and standards.

3.2.9 PNEUMATIC WORK

A. All instrument air tubing shall be virgin, non-combustible polyethylene (containing no plasticizer). All tubing shall be of adequate size and schedule for the intended usage, installed in a neat, professional manner, and be adequately supported.

B. All exposed tubing in mechanical equipment rooms and all other exposed areas shall be installed within metallic conduit or approved alternate. Final terminations to controlled devices may be completed with exposed tubing runs no longer than six (6) inches within buildings. Any polyethylene tubing installed outdoors shall not be exposed and where copper tubing is used, proper vibration limiting precautions shall be made.

C. All tubing shall be number coded on each end and at each junction for easy identification. Additionally, number codes shall be identical to those as shown on the Record Documents (As-builts). Concealed tubing shall be well supported (no more than six (6) foot spans) and attached to ceiling supports or to the building structure. Tubing shall not be laid directly upon ceiling system support grids or attached to ceiling grid hanger wiring.

D. Pressure gauges shall be provided on each pneumatic input and output signal of the EMCS. The gauges shall read in PSI from 0 - 150 percent of the maximum pressure range of the application and be mounted in metal cabinets with other related pneumatic equipment/devices at each system controlled and/or monitored. Each gauge shall be at least one and one-half (1.5) inches in face diameter, provide a minimum accuracy of $\pm$ 5 percent at full scale and be neatly labeled

Copyright © 2002 by ESS engineering, Inc.

to identify its function and the system it serves. Additionally, a port shall be installed adjacent to the gauge for purposes of checking pressures with a calibrated instrument.

E. The EMCS Contractor shall be responsible for maintaining high and/or low-pressure alarm annunciation and/or safe-guard (cut-off) control of air handlers as provided via existing pneumatic and/or electronic control devices. The EMCS Contractor shall either maintain the installation and operation of the existing pressure safeguard control devices or provide replacements as may be required to maintain existing pressure safeguard functions while providing currently specified functions.

F. The EMCS Contractor shall be responsible for inspecting any and all compressed air systems used in conjunction with the EMCS. Any deficiencies shall be reported to the City and upon repair of the system by the City and subsequent re-inspection by the EMCS Contractor. Additionally, the EMCS Contractor shall report to the City any necessity to upgrade capacities of existing compressed air systems (including air dryers) to accommodate the installation of additional pneumatic devices per the Specification.

3.2.10 DECOMMISSIONING

A. The EMCS Contractor shall be responsible for the complete removal of all existing temperature control equipment (pneumatic and electric), EMCS hardware, sensors, associated time-clocks, wiring, field cabinets and conduit not utilized per the scope of work defined within the Supplemental Specification(s) and/or rendered inoperative or redundant.

B. Removal shall be performed in a neat and professional manner. All resulting openings in ductwork, piping insulation damage, surface finish damage, or other equipment damage affected by said removal shall be properly sealed, repaired and/or re-insulated. Removed materials shall be stored on-site and/or disposed of as directed by the City.

C. The requirements for decommissioning of existing temperature control equipment shall be inclusive of all existing conduit, wiring and/or pneumatic tubing only to the degree that said materials are contained in mechanical rooms, central plants, or other similar equipment rooms. Said material in other areas that is rendered inoperative and/or redundant per the scope of work defined within the Supplemental Specification(s) shall be neatly terminated, cut and/or capped and left in place. Further removal of same shall be at the City's discretion and cost.

D. Floor or ground penetrations shall be left in a re-usable, code compliant manner such that said penetrations can be re-used for future work either by the EMCS Contractor or the City.

3.2.11 HAZARDOUS MATERIALS

A. The EMCS Contractor shall comply with all applicable laws relating to hazardous or toxic materials, including (without limitation to) asbestos, lead paint, and PCB's. If the EMCS

Copyright © 2002 by ESS engineering, Inc.

Contractor discovers or suspects any such materials in the area of work, the EMCS Contractor shall promptly notify the City and shall cease all work in that area. The City shall be responsible to identify, remove, monitor, and/or contain any said hazardous or toxic materials that would be affected by, and/or exposed to, the current work.

3.2.12 PROGRESS MEETINGS

A. The EMCS Contractor shall participate in regularly scheduled progress meetings throughout the construction period as required. The meetings shall be held at the City's offices or a specific location as directed by the City and be attended by representatives of the City and the primary project coordinator of the EMCS Contractor. At each meeting, the EMCS Contractor representative shall be prepared to summarize the current installation status and discuss any technical problems encountered. Additional building and scope specific meetings shall be scheduled as needed to address on going project activities.

B. Progress Reports shall be issued monthly by the EMCS Contractor which shall include an updated schedule which reflects all submittal, programming, installation, start-up, testing, commissioning, training, and acceptance events. The Progress Report shall also describe any technical problems encountered, suggestions for resolution, and prior technical problems resolved. Each Progress Report shall be submitted to the City two (2) days prior to each scheduled meeting.

3.2.13 LABELING

A. The EMCS Contractor shall provide and mechanically affix (rivets or screws) new labeling which shall reflect the approved names (as shown on the as-build documentation) given to equipment, panel, EMCS point, etc. and/or provide warnings as follows:

1. Enclosure Labeling

   a. Enclosure labeling shall be plastic (inside applications) or black anodized aluminum (outside applications) and appropriately engraved. Labels shall be identical in size, color and material project-wide.

   b. All enclosures shall be clearly labeled to indicate function and service, such as (RPD-1, AHU-1, EMCS Power Supplies, etc.).

   Example on the following page:

Copyright © 2002 by ESS engineering, Inc.

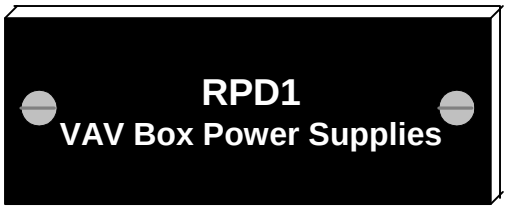

Example is not to size.

2. RPD Labeling

   c. Each Remote Processing Device (RPD), and Application Specific Controller (ASC) shall be uniquely identified as part of the EMCS and appropriately labeled.

3. Cable and Conduit Labeling

   d. Plenum cable shall be labeled to indicate service at intervals of not more than twenty-five (25) feet.

   e. Conduit shall be labeled to indicate service at intervals of not more than fifty (50) feet.

   f. All EMCS point field wiring shall be properly labeled at **both ends** with a labeling design, which incorporates a typed, self-laminating label or a heat shrink material. Labels shall indicate the device address identical to that referenced within the Project Documentation with **noun names**. Numbers referring to a matrix of noun names shall not be used.

   Example:

   g. All power wiring shall be neatly labeled to indicate service, voltage, and breaker source.

4. Warning Labels

   h. Permanent warning labels shall be affixed to all equipment (**motors, pumps fans** etc.) that are automatically started by the EMCS including all **motor starters** and **control panels** that are started by remote EMCS command.

Copyright © 2002 by ESS engineering, Inc.

i. Warning labels shall be 3' X 5" with white lettering on a red background including the word "CAUTION" being of at least 20-point type. The label shall state that the equipment is under automatic control and may start or stop at any time without warning, and to isolate the load before servicing.

Example:

CAUTON

This equipment is under automatic control of the EMCS and may start or stop at any time. Disconnet this load from its power source before servicing.

Example is not to size.

5. Wiring Schematic

a. Each Remote Processing Device (RPD) shall be furnished with a wiring identification schematic and input/output point listing properly protected and secured within the RPD enclosure.

b. Each ASC or Field Device shall be furnished with a wiring identification schematic and input / output point listing properly protected and secured with the ASC or Field Device enclosure. VAV controllers are exempt from this requirement however; VAV wiring diagrams shall be submitted as part of the record documentation as-builds.

6. Circuit Breakers and Power Supplies

a. The location of the circuit breaker shall be clearly identified and labeled on each controller serviced by that circuit.

b. Each power supply shall be clearly labeled with the circuit serving the power supply and a corresponding matrix indicating which equipment is supplied (VAV box, controller, etc.) by each power supply in the as-built documentation.

Copyright © 2002 by ESS engineering, Inc.

7. The following chart identifies the EMCS equipment that requires labeling for either an EMCS retrofit or new installation. The requirements displayed in this chart are minimum requirements however; additional labeling requirements may be listed in the Supplemental Specification(s).

EMCS LABELING CHART
Table 2.1

Equipment	Type of Label	How Affixed	Placement
Remote Processing Device Enclosure	Plastic or black aluminum	Mechanically	Outside of Enclosure
Remote Processing Device	Permanent Marker, indicating area served and number and IP address	Black Permanent Marker	On RPD cover
RPD Wiring Diagram	Laminated Diagram	Mechanically affixed if possible	Inside RPD enclosure cover
ASC or Field Device Enclosure	Plastic or black aluminum	Mechanically	Outside of Enclosure
ASC or Field Device	Permanent Marker, indicating area served and number	Black Permanent Marker	On ASC or Field Device cover
ASC or Field Device Wiring Diagram	Laminated Diagram	Mechanically affixed if possible	Inside ASC or Field Device enclosure cover
Point to Point Wiring	Typed, self laminating or heat shrink label (Noun Names)	Slipped over or adhered to the wire insulation.	Both ends of wire
Relays	Plastic, identifying relay use	Mechanically affixed	Below Relay Base
Power Supplies	Plastic, identifying power supply number	Mechanically affixed	Below Power Supply Mounting

Copyright © 2002 by ESS engineering, Inc.

Equipment	Type of Label	How Affixed	Placement
Conduit	Permanent Marker, indicating EMCS use	Black Permanent Marker	Identify EMCS conduit every 50 feet
Plenum Cable	Permanent Marker, identifying EMCS use	Black Permanent Marker	Identify Plenum Cable ever 25 feet
Junction Boxes	Permanent Marker, indicating power circuit number and or EMCS use	Black Permanent Marker	On Junction Box Cover
Warning Labels	Adhesive	Adhered	Place on equipment being controlled and switch gear starter

3.3 OPERATOR TRAINING

A. The EMCS Contractor shall be responsible to schedule and provide training for a period of time as defined within the Supplemental Specification(s). Training shall be provided for no less than three (3) persons per group designated by the City. Training shall be provided on-site for City assigned personnel regarding all aspects of EMCS operation.

B. At a minimum, the on-site training shall include an overview of the EMCS installation provided as per scope of work defined within the Supplemental Specification(s), explanation of all EMCS components and functions, explanation of EMCS control strategies, instruction on Operator Workstation use, data back-up procedures, explanation of the set-up and generation of all EMCS reports and graphics, description of alarm conditions and acknowledgment procedures, and instruction on system operation through the OW.

C. On-site training shall also detail preventive maintenance and operational performance verification procedures for OWN components, RPD's, ASC's, sensors, transducers and all other equipment provided under the scope of work defined within the Supplemental Specification(s). At a minimum, maintenance procedure instruction shall include RPD and ASC troubleshooting and repair, input/output point addition and deletion, verification and calibration of sensors, transducers, output devices, and network communications.

Copyright © 2002 by ESS engineering, Inc.

3.4 EMCS COMMISSIONING

A. Prior to submitting the Notice of Substantial Completion, the EMCS Contractor shall document compliance to the Specification and/or Supplemental Specification(s) of all installed hardware components, the calibration and accuracy of critical EMCS sensors, and the functionality of all software. The EMCS Contractor shall document said compliance by completing commissioning activities and documenting results using the approved Commissioning Templates as specified within Section 3.1.1.5.

B. Commissioning as defined in this section shall extend to all hardware and software components which are newly installed and to those components which reside "down stream" of a retrofitted or replaced component; i.e., existing sensors and controlled devices which are piped or wired to a newly installed RPD or ASC. Component commissioning shall also extend to all new and existing immersion and flow sensors.

C. In addition, all application programs that are re-installed within a new RPD or ASC shall be commissioned as defined herein.

3.4.1 INSTALLATION COMMISSIONING

A. Prior to submitting the Notice of Substantial Completion, the EMCS Contractor shall document compliance to the Specification of all installed hardware components of the EMCS. The EMCS Contractor shall thoroughly inspect the installation, ensure conformance to installation requirements described herein, and document results on the Installation Commissioning Report. In addition to installation inspections, the EMCS Contractor shall test and document all system communication functions.

B. The EMCS Contractor shall perform a detailed system installation inspection. All work performed by this EMCS Contractor and/or sub-EMCS Contractors shall be reviewed in detail and recorded on the Installation Commissioning Report. The inspections shall be performed on a system-by-system basis, segregated by HVAC system to the greatest extent possible. At a minimum, the installation inspection shall include:

1. Sensors
2. Controlled devices
3. RPDs/ASCs/OWs
4. Panels
5. Conduit
6. Enclosures
7. Wiring
8. Penetrations
9. Grounding
10. Labeling

Copyright © 2002 by ESS engineering, Inc.

C. The EMCS Contractor shall initial and date each system/area installation inspection item. By so doing, the EMCS Contractor is guaranteeing that the item has been physically inspected and that the installation is complete, and specification and code compliant.

D. Where items are not complete, the EMCS Contractor will record them on an Installation Punch List with the anticipated date of completion. Only upon completion will the EMCS Contractor record them as such on the Installation Commissioning Report.

E. BAS point installation verification – both hardware and software – shall be accomplished by printing a system report at the workstation of all points communicated to the workstation. The intent of this verification is to provide software evidence that all points have been programmed into the BAS as well as hardware evidence that the analog input points are responding with a values. Digital input, output, and analog output type points shall be validated within the Functional Commissioning process. Analog input points will be further validated within the Calibration and Functional Commissioning as well.

F. To the greatest degree possible, the EMCS Contractor will group all HVAC system points within the workstation printout.

3.4.2 CALIBRATION COMMISSIONING

A. Prior to submitting the Notice of Substantial Completion, the EMCS Contractor shall field calibrate and/or validate the factory calibration of critical EMCS sensors as defined in this section. All results shall be documented on the Calibration Commissioning Report.

B. Field calibration/validation and tests of EMCS monitored sensors and controlled devices shall take place during the installation phase of this project and at any time necessary throughout the EMCS Warranty period to ensure accurate reporting of all monitored values and controlled device positioning

C. Component testing shall verify equipment responses from variable signals. The following point types shall be tested:

1. Electric / pneumatic operated valves

2. Electric / pneumatic operated dampers

3. Variable reset signals for speeds, temperatures, pressures, etc.

D. During the calibration and testing procedure, the EMCS Contractor shall record each step of the process. At a minimum, the time, date, frequency, and value shall be recorded. The Technician shall initial each calibration and test. The following point types shall be calibrated as specified in the following section.

Copyright © 2002 by ESS engineering, Inc.

3.4.2.1 Water Pipe Temperature Sensors

A. All water pipe temperature sensors will be calibrated. The minimum temperature accuracy over the entire range of the sensor will be ± .2ºF. Each temperature sensor shall be submersed in an ice bath for calibration. The ice bath shall consist of a mixture of well-crushed ice and water, continuously agitated throughout the test to provide a stable 32°F source. The test shall be conducted for at least five (5) minutes per sensor once the readings have stabilized, and for a minimum of ten (10) readings (two per minute) shall be recorded and averaged on the calibration sheets provided for each sensor. Recording of the temperature readings can be a trend log or manual readings through the workstation or field panel.

B. For temperature sensors of insufficient range for ice bath validation, the sensor shall be submersed in an insulated water bath of nominally the same temperature as to be experienced in the temperature-sensed application. The water temperature shall be recorded either via a trend log or manually through the workstation or the field panel and simultaneously via a calibrated reference thermometer of no less than 0.1°F resolution and accuracy. The test shall be conducted for at least five (5) minutes per sensor once the readings have stabilized, and for a minimum of ten (10) readings (two per minute) shall be recorded and averaged for each sensor. Recording of the temperature readings can be a trend log or manual readings through the workstation or field panel.

C. For linear (RTD / 4-20mA) sensors, the offset for field panel configuration shall be the difference between 32ºF and the uncorrected average of the ten readings; e.g., 32.0-33.5 = -1.5ºF offset.

D. For non-linear or non-scaleable sensors that are out of acceptable tolerance, replace with new sensors and re-validate until a sensor is installed that is within the specified tolerance.

3.4.2.2 Air Temperature Sensors

A. Of each air temperature sensor, the EMCS Contractor will test a percentage of, and document actual ambient and workstation or field panel readings simultaneously. Workstation or field panel readings can be a trend log or manually read and recorded. The minimum temperature accuracy over the entire range of the sensor will be ± 0.5ºF. The EMCS Contractor shall record the readings on the forms provided.

B. Measurement of actual temperature will be taken one time, after the reading has stabilized. If a trend log is being used to validate the sensor readings, the EMCS Contractor must synchronize the time of the reading with the workstation time. If the workstation or field panels are being read manually, recorded temperatures must be taken at the same. Attach trend log data in excel format with the validation report.

C. Each of the sensor readings will be validated with an instrument with a current and traceable certificate of accuracy, accurate to within ± 0.1ºF.

Copyright © 2002 by ESS engineering, Inc.

D. The following table provides the quantities of sensors to be validated and the maximum quantity of out-of-tolerance sensors allowed. In the event that there are more than the maximum allowed, the EMCS Contractor shall validate an additional quantity equal to the original quantity required. If less than the maximum allowed out-of-tolerance sensors cannot be accomplished, all sensors will be validated and replaced and/or offsets programmed as applicable.

3.4.2.3 Duct and Space Static and Differential Pressure Sensors

A. The EMCS Contractor will validate the accuracy of all duct and space static pressure sensors. Validation of workstation and/or field panel readings will be accomplished by utilizing a Magnehelic gage or similar instrument with a current and traceable certificate of accuracy.

B. All duct and space static pressure sensors will be accurate to within ± 2% of full scale.

C. The test gage will be temporarily installed to sense the same pressures as the sensor being validated. Use of pneumatic, barbed tees in the existing sensing tubes is permissible. The validation readings will be conducted once the gage readings are stable.

D. The gage will be read while simultaneously being trended and/or manually read at the workstation or field panel. If a trend log is being used to validate the sensor readings, the EMCS Contractor must synchronize the time of the reading with the workstation time. Gage readings and workstation or field panel readings will be recorded on the validation template. If the sensor is out of tolerance, the EMCS Contractor will replace, calibrate, or install correction offsets as required. All calibration offsets will be recorded on the validation template. Attach trend log data in excel format with the validation report.

3.4.2.4 Differential Pressure Switches

A. The EMCS Contractor will validate the accuracy of all differential air pressure switches. Validation of workstation and/or field panel readings will be accomplished by utilizing a differential type Magnehelic gage for air pressures or similar instrument with a current and traceable certificate of accuracy.

B. The test gage will be temporarily installed to sense the same differential pressure as the sensor being validated. Use of pneumatic, barbed tees in the existing sensing tubes is permissible. The validation readings will be conducted once the gage readings are stable.

C. Manually adjust the switch actuation setpoint on the sensor to match the pressure indicated on the gage. Gage readings and workstation or field panel readings; e.g., on or off, will be recorded on the validation template. If the switch does not activate at the current setpoint, adjust the setpoint until the switch activates. Record the setpoint and gage reading on the validation template, re-adjust the actual setpoint ± the difference between the gage reading and actual switch point. If the sensor is out of tolerance more than ± 10%, replace and re-validate.

Copyright © 2002 by ESS engineering, Inc.

D. The EMCS Contractor will validate the accuracy of all differential water pressure switches. Validation of workstation and/or field panel readings will be accomplished by utilizing a differential gage for water pressures with a current and traceable certificate of accuracy.

E. The test gage will be temporarily installed to sense the same differential pressure as the sensor being validated. The validation readings will be conducted once the gage readings are stable.

F. Manually adjust the switch actuation setpoint on the sensor to match the pressure indicated on the gage. Gage readings and workstation or field panel readings; e.g., on or off, will be recorded on the validation template. If the switch does not activate at the current setpoint, adjust the setpoint until the switch activates. Record the setpoint and gage reading on the validation template, re-adjust the actual setpoint ± the difference between the gage reading and actual switch point. If the sensor is out of tolerance more than ± 10%, replace and re-validate.

3.4.2.5 Air Flow / Velocity Sensor

A. The EMCS Contractor will validate the accuracy of all air handler airflow velocity sensors as well as a sample percentage of VAV terminal box airflow velocity sensors. Validation of actual workstation and/or field panel readings will be accomplished by utilizing a hot wire anemometer or similar instrument with a current and traceable certificate of accuracy.

B. Validation of each air handler airflow velocity sensor will be accomplished by following the manufacturer of the test instrument's instructions. Throughout the validation process, the EMCS Contractor will, through the workstation, trend the subject sensor's readings on a one-minute basis. At a minimum, the EMCS Contractor will take the required amount of airflow measurements within the duct, average the results, and compare with the average trended data over the same time period.

C. The difference of the readings and the sensor's readings will not exceed ± 5%. In the event this tolerance is exceeded, the EMCS Contractor will program the corrective offsets and re-validate. Attach trend logs in excel format to the validation report.

D. Similarly, the EMCS Contractor will validate VAV terminal box airflow velocity sensors. A total of five (5%) percent of the total installed will be validated. At a minimum, five (5) units will be validated.

3.4.2.6 Pipe Flow Sensor

A. The EMCS Contractor will validate the accuracy of all water flow sensors. Validation of actual workstation and/or field panel readings will be accomplished by utilizing an ultrasonic flow meter or similar instrument with a current and traceable certificate of accuracy.

Copyright © 2002 by ESS engineering, Inc.

B. Turbine insertion meters shall be installed per factory instructions and field validated by use of a calibrated reference ultra-sonic flow meter of one (1) percent certified accuracy. Deviations in the readings between the two meters that are less than ten (10) percent shall be corrected by applying offset correction factors to the turbine meter readings. Deviations greater than ten (10) percent shall not be acceptable and shall require installation and/or factory calibration correction.

C. Ultrasonic flow meters shall be installed per factory instructions and field validated to the greatest degree possible by comparisons to other installed and calibrated flow meters.

D. All flow calibration data shall be documented and submitted in a format that reflects all the parameters and measurements described above, and submitted as part of the Calibration Commissioning documentation.

3.4.2.7 Relative Humidity Sensor

A. Humidity sensor factory calibration shall be field validated by use of a calibrated reference instrument at a nominal monitoring condition or by the "saturated salt solution" method. For linear devices, the difference between RPD/ASC display and reference standard value shall be used for RPD/ASC offset. With either calibration method, a three (3)-point calibration shall be performed on all sensors over the specified range.

B. All humidity calibration data shall be documented and submitted in a format that reflects all the parameters and measurements described above, and submitted as part of the Calibration Commissioning documentation.

3.4.2.8 CO_2 Sensor

A. Field validation of the CO_2 sensors shall be performed to identify sensors that do not report nominal values when compared with other sensors. Validation shall be performed by locating all sensors in the same duct location within one (1) foot of each other. Sensor output values shall be monitored for a period of 24 hours while the air handler is operating, trending each point at one (1) minute intervals. The average values of the group shall be used as the “standard” for the group. Any sensor average value that deviates from the group standard value by more than the stated accuracy (50 ppm) shall be returned to the factory for replacement.

B. All sensor calibration data shall be documented and submitted in a format that reflects all the parameters and measurements described above, and submitted as part of the Calibration Commissioning documentation.

Copyright © 2002 by ESS engineering, Inc.

3.4.3 FUNCTIONAL COMMISSIONING

A. Prior to submitting the Notice of Substantial Completion, the EMCS Contractor shall test and document compliance to the Specification of all software functions detailed herein and document results on the Functional Commissioning Report. All functional testing shall be performed subsequent to completion and re-work, if necessary, of all installation and calibration commissioning.

B. The EMCS Contractor shall demonstrate compliance with the sequences detailed in the specifications by trending all necessary points associated with the equipment and systems, on a fifteen (15) minute interval for a consecutive two-week period. The EMCS Contractor shall review the data regularly throughout the trending period and note the cause for any abnormalities in the data (i.e. power outage, manual override by an operator, etc.). As part of the commissioning report, the EMCS Contractor shall submit all trend log data in MS-Excel or approved format as well as the required graphical representations detailed below.

C. The EMCS Contractor shall submit graphical representations of all the trended data as detailed in the Functional Commissioning Report. Variables on the trend graphs shall be grouped such that the results of individual sequences will be easily reviewed. Trend graphs shall be submitted covering the entire two-week period as well as a graph for a single occupied day and a single unoccupied day. The EMCS Contractor shall ensure that the data, as a result of all sequences outlined below, will appear within at least one of these three graphs.

D. It is anticipated that the sequences outlined below will not all 'naturally' be performed throughout the course of the trending period. Therefore, the EMCS Contractor will temporarily bias the values that trigger the sequence and so note within the trend logs and data that such action had taken place.

E. During the trending period, the EMCS Contractor shall demonstrate system functionality in response to variable conditions. At a minimum, the following individual trend graphs shall be submitted:

1. Start/stop
2. System setpoint adjustment responses
3. Power failure response
4. Equipment/system failure response
5. Fire alarm and smoke control sequence responses (as required)
6. Air handler sequences of control
   a. Start/stop

Copyright © 2002 by ESS engineering, Inc.

b. Duct static pressure control
c. Space static pressure control
d. Supply air temperature reset
e. Minimum outside air control
f. Morning warm-up
g. Economizer control

7. Central plant sequences of control

a. Start/stop – chillers and pumps
b. Chiller staging
c. Pump failure

8. Heating hot water system

a. Start/stop – boilers and pumps

9. VAV terminal box sequences of control

a. Start/stop – occupied and unoccupied modes
b. Air flow reset

F. In addition to the system response testing, and coincident to the trending period, commands shall be issued through the Operator Workstations which shall force all installed controllers to exercise the generation, issuance, and acknowledgement of alarms; e.g., duct smoke detector. The EMCS Contractor will note within the trend report the date and time that the smoke detectors were activated.

G. To facilitate the comparison of the affect of one sequence over another, all sequences and subsequent trend reports/graphs listed below will be executed over the exact same time period. Use of multiple axis graphs may be required to provide clarity of the data as shown in the following example.

H. In the event that any fire alarm or smoke control initiating or controlling equipment is upgraded, replaced, or otherwise re-worked, it shall be the EMCS Contractor's responsibility to re-test the affected system(s) to the extent in which the governing or authorizing agencies require. For purposes of satisfying the commissioning requirements of this Specification, all points associated with the physical testing of the system (if required) shall be trended as outlined below. This commissioning and trending requirement of the Specification does not alleviate the EMCS Contractor from gaining the acceptance of the applicable agencies.

3.5 WARRANTY

A. The EMCS installed as part of this project, including all hardware, software, equipment, sensors and wiring shall be warranted for a period not less than two (2) years from the date of system

Copyright © 2002 by ESS engineering, Inc.

acceptance. Any EMCS defect, deficiency or failure that is identified during this warranty period shall be corrected without cost to the City for either materials or labor. Additionally, the EMCS Contractor shall issue a report to the City as to what warranty work was performed.

3.5.1 BASIC WARRANTY SERVICE

A. For a period of two (2) years from the date of system acceptance, the EMCS Contractor shall provide the following basic warranty services without additional cost to the City:

1. Provide 24 hour, 7 days per week service. The EMCS Contractor shall have a local office, staffed with administrative and service personnel prepared to respond to the calls. The response time for any call shall be no longer than two (2) hours regardless of the time of day.

2. Provide on-site/on-line technical support, training and/or service labor as outlined in the Supplemental Specification(s). Said labor hours shall be applied as requested by the City and distributed throughout the year to best suit the needs of the City.

3. Provide all new software updates released by the manufacturer and related third party software vendors as required to support said updates within ninety (90) days of manufacturer release. Said software shall apply to Operator Workstations.

4. Provide all new RPD and/or gateway firmware updates released by the manufacturer within ninety (90) days of said release.

5. Maintain current Record (As-Built) Drawings, schematics and program records of the City's complete EMCS and update as required to reflect all modifications made to the EMCS. The EMCS Contractor shall maintain four (4) complete up-to-date sets of Record Documentation at the City's main office. Revised drawings, schematics and Program Records shall be furnished periodically throughout the year as needed to maintain said Records and to document all hardware and software modifications implemented by the EMCS Contractor.

6. Replace and/or repair all defective system components corresponding to the scope of work defined within the Supplemental Specification(s) within twenty-four (24) hours of notification. Said system components shall include, but is not limited to, all pneumatic and electronic field controls, routers, sensing devices, actuators, transducers, metering equipment, operator workstations, and mobile terminal stations The EMCS Contractor shall maintain an appropriate inventory of spare parts at its local warehouse to facilitate this capability. Said local warehouse shall be within the metropolitan area of the City of Tucson, Pima County, Arizona.

7. Provide an on-site inventory of emergency repair parts. The City may, at their discretion, purchase the parts and deduct the amount paid from the service contract

Copyright © 2002 by ESS engineering, Inc.

monthly fee. When parts are used from the inventory, the parts will be repurchased and put back in the cabinet within thirty (30) days.

8. Provide EMCS support remotely via modem or Internet from the EMCS Contractor's local office.

9. Factory-trained personnel directly employed by the local EMCS Contractor and/or representatives of related equipment manufacturers shall provide Service.

10. Maintain and support all EMCS software provided under the scope of work per this Specification and Supplemental Specification(s). This support shall include all host, operating system, application/control, and third party software.

B. The EMCS Contractor shall furnish a detailed preventive maintenance (PM) schedule that itemizes the specific maintenance requirement of all EMCS components.

C. In the event any service problem cannot be repaired in the time frame described above, it is the responsibility of the EMCS Contractor to implement necessary bypass, override and/or manual control in order to temporarily restore any system to an operating condition. Any such temporary implementation shall be coordinated with the City. Failure to comply shall result in a penalty of $1,500 per day.

3.5.2 BASIC WARRANTY CHECK-OUT

A. Within thirty (30) calendar days prior to the conclusion of the warranty period, the EMCS Contractor shall perform a complete inspection and checkout of the EMCS including all equipment, hardware and software. The Warranty checkout shall include at least all items identified under Functional Commissioning, Section 3.4 and shall be witnessed by the City or the City's representative.

B. The EMCS Contractor shall be responsible for the replacement and/or repair of any deficiencies identified by the EMCS Contractor, the City, or the City's representative during the Warranty checkout. The warranty period shall not expire until after completion of the Warranty checkout and correction of all deficiencies identified that are covered by the Basic Warranty.

Copyright © 2002 by ESS engineering, Inc.

This page intentionally skipped.

Copyright © 2002 by ESS engineering, Inc.

4.0 HARDWARE REQUIREMENTS

A. A computer-based EMCS shall be provided to monitor and control building equipment in the most efficient and cost-effective manner to minimize energy consumption while maintaining comfort conditions. The EMCS shall be based on state-of-the-art Direct Digital Control (DDC) technologies and most-recent generation EMCS products.

B. The EMCS supplied shall be installed and configured with the necessary hardware and programming to provide "stand-alone" distributed control, which does not require communication with any other network device or component including Operator Workstations (OWs) to perform full DDC functionality.

C. The Remote Processing Devices (RPDs) shall be networked via a BACnet-based, Local Area Network (LAN). The EMCS Contractor shall provide, install, and configure all cabling necessary to integrate to the BACnet-backbone LAN as defined in Section 4.2 of this Specification.

4.1 OPERATOR WORKSTATIONS

A. The Operator Workstations shall provide full access and operational capabilities to the entire EMCS and all peripherals listed under Section 4.1.1. The OWs shall be based upon architecture, software, and a hardware design which shall permit operator access to a final EMCS configuration of no less than three (3) times the input/output point configuration installed per the current scope of work defined within the Supplemental Specification(s) and the existing installed EMCS.

B. The OWs shall support the BIBBs corresponding to the BACnet Operator Workstation (B-OWS) profile as defined in Addendum *d* (Annex K) of the BACnet Standard.

C. All hardware components of the OWs shall be standard hardware readily available for purchase by the EMCS Contractor and/or EMCS manufacturer. All operating system software and user interface software shall also be a readily available for purchase by the EMCS vendor.

D. At a minimum, each OW shall be based upon standard, commercially available digital, desktop or tower, IBM PC-compatible computer of modular design, based upon the Intel microprocessor, or approved alternate. Each OW shall be provided surge protection and an Uninterruptible Power Supply (UPS) as defined in Section 4.1.3.

E. In the event the EMCS manufacturer's minimum OW configuration requirements are more extensive than those specified herein, the EMCS manufacturer's requirements shall apply.

Copyright © 2002 by ESS engineering, Inc.

F. The EMCS Contractor / Vendor shall coordinate OW specifications with the City and shall submit the OW specifications as submittals to the City for authorization prior to ordering any OW computer equipment.

G. Minimum configuration of each OW shall include the following however, the City has final authority over the maximum specifications (specifications beyond the required minimum) for any computer equipment associated with the EMCS:

1. 1.44 megabyte, three and one-half (3.5) inch floppy disk drive,
2. Multimedia kit (RW-CD, high quality sound card, and speakers),
3. Processor Speed, as specified by the City,
4. Hard Drive, capacity as specified by the City,
5. RAM, quantity as specified by the City,
6. Video Card, as specified by the City,
7. Twenty (20) inch Super VGA monitor, as specified by City
8. 10/100 Ethernet communications card, or as specified by the City,
9. Windows compatible key keyboard,
10. 56,600 baud v.90 compatible modem,
11. Tape or disk capability to back-up the entire hard drive, preferably on one tape or disk, manufacture as approved by City,
12. USB optical mouse, and associated hardware and peripherals as defined herein and other equipment as required satisfying the Specification or City's requirements.

4.1.1 COLOR REPORT PRINTER

A. A desktop color printer shall be provided with each OW. The EMCS vendor shall supply a Hewlett Packard or Cannon brand color printer unless authorized by the City otherwise. Separate color inkwells are preferred on color printers; this option shall be coordinated with the City.

B. The printer shall be able to print letter size and legal size, on plain paper and on transparencies. Standard print drivers for Windows98, Windows 2000 and Windows NT (or as requested / coordinated with the City) shall be provided and utilized by the EMCS Contractor.

Copyright © 2002 by ESS engineering, Inc.

C. The EMCS vendor shall coordinate printer specifications with the City and shall submit printer submittals to the City for review and acceptance prior to purchasing any printer equipment.

4.1.2 ALARM PRINTER

A. One (1) desktop, tractor-fed, dot matrix printer shall be provided with each OW that continuously receives and prints alarm occurrences and messages from the EMCS. The printer shall also provide for hard copy data printouts of reports and graphic images.

B. The printer shall be minimum 24-pin dot matrix type and print at least an 80-character line length and have a tractor feed capable of using standard computer paper. The printer shall support the full ASCII character set in both "draft" and "letter" quality modes with a minimum printer speed of three hundred (300) characters per second in "draft" mode. Upon completion of all work (including acceptance testing), the EMCS Contractor shall supply one full carton of appropriate printer paper.

C. The EMCS vendor shall coordinate printer specifications with the City and shall submit printer submittals to the City for review and acceptance prior to purchasing any printer equipment.

4.1.3 UNINTERRUPTABLE POWER SUPPLY

A. Each OW shall be provided with an uninterruptible power supply (UPS). The UPS shall be sized to provide electrical power to all components that comprise the OW, including the computer, monitor, printers, and modems. Upon a power failure, the UPS shall provide power to all attached equipment for a minimum period of thirty (30) minutes. The UPS shall be of the constant on-line type, in that the OW operating power is continuously derived from direct current (DC) power, through an inverter, to become alternating current (AC). A unit that physically switches between the UPS' DC/AC section and source AC power shall not be acceptable.

4.2 MOBILE TERMINAL STATIONS

A. The MTS' (laptop computers) provided by the EMCS Contractor shall permit MTS-RPD and MTS-to-ASC communication to equipment within the site(s). Said MTS' shall be used for the troubleshooting, configuration, programming, and service of said RPD's and ASCs. In addition, MTS-to-ASC communication shall be provided directly at room/space temperature sensors used for EMCS control of zone level HVAC equipment including but not limited to VAV boxes, mixing boxes, fan coils, and packaged units unless otherwise specified. The MTS' shall use the communication protocol "native" to the system's RPD's.

B. While connected to an RPD, an operator shall be provided full point monitoring, setpoint adjustment, manual equipment operation, and alarm monitoring capabilities to at least the RPD's connected at a sub-net level. While connected to an ASC, an operator shall be provided full

Copyright © 2002 by ESS engineering, Inc.

point monitoring, setpoint adjustments, manual equipment operation, and alarm monitoring capabilities for at least the ASC to which it is connected.

C. Additionally, within each mechanical/electrical or equipment room, an MTS communication port shall be provided. Via said port, the MTS shall communicate with the RPD or ASC associated with said controlled equipment regardless of the location of the RPD or ASC.

D. The MTS shall permit operator access to the EMCS directly, via the City's Ethernet infrastructure or remotely via modem.

E. The MTS' shall support the BIBBs corresponding to the BACnet Operator Workstation (B-OWS) profile as defined in Addendum *d* (Annex K) of the BACnet Standard.

F. The MTS configuration shall include all necessary hardware and software to provide remote operator access to the EMCS via modem and provide automatic remote (via modem) reporting of EMCS alarms. Under this scope, the BACnet PTP protocol shall be used for remote MTS connections. Under modem access to the EMCS, an operator shall be provided full OW functionality when accessing the EMCS through an MTS. The City shall be responsible for providing any telephone links required to support modem access.

G. Each MTS shall be based upon a standard, commercially available digital, IBM PC-compatible computer, be of "notebook" type, based upon the Intel microprocessor, or approved alternate.

H. In the event the EMCS manufacturer's minimum MTS configuration requirements are more extensive than those specified herein, the EMCS manufacturer's requirements shall apply.

I. The EMCS Contractor / Vendor shall coordinate MTS specifications with the City and shall submit the MTS specifications as submittals to the City for authorization prior to ordering any MTS computer equipment.

J. Minimum configuration of each MTS shall include the following however, the City has final authority over the maximum specifications (specifications beyond the required minimum) of any computer equipment associated with the EMCS:

1. One (1) PCMCIA-type interface slot

2. 1.44 megabyte, three and one-half (3.5) inch floppy disk drive,

3. Multimedia kit (RW-CD or DVD, high quality sound card, and speakers),

4. Hard Drive, capacity as specified by the City,

5. RAM, quantity as specified by the City,

6. Display, as approved by the City,

Copyright © 2002 by ESS engineering, Inc.

7. Windows-compatible keyboard and integrated mouse,

8. 56,600 baud v.90 modem

9. 10/100 Ethernet port, or as specified by the City,

K. Associated hardware and peripherals as defined herein and other equipment as required satisfying the Specification or the City's requirements.

4.3 REMOTE PROCESSING DEVICE (RPD)

A. The EMCS shall utilize intelligent, microprocessor-based, real-time, Remote Processing Devices (RPD's). The RPD's shall interface monitored sensors and controlled devices to the EMCS. An RPD shall consist of a single microprocessor-based controller or a master microprocessor controller connected to a sub-network of microprocessor controllers and/or field input/output devices. An RPD is further defined as a microprocessor-based interface between the EMCS and any third-party equipment.

B. The RPD's shall support the BIBBs corresponding to the BACnet Building Controller (B-BC) profile as defined in Addendum *d* (Annex K) of the BACnet Standard.

C. The RPD's shall provide fully distributed control independent of the operational status of the OW. Each RPD shall be properly equipped, programmed and installed to provide the following functions:

1. Acquire, process and transmit data through the LAN to other RPD's, Application Specific Controllers (ASC's), and any host access device.

2. Accept, evaluate and execute commands received via another RPD and host access device.

3. Record and report the changes of state and/or values of input/output points or pseudo points that are physically, or through software, identified to any other RPD.

4. Execute all application programs, calculations and commands via the RPD's resident microprocessor necessary to satisfy the monitoring and control requirements presented within this Specification and Supplemental Specification(s). All necessary calculations required to achieve this control shall be executed within the RPD independent of the OWs. All control strategies performed by the RPD shall be both operator definable and modifiable through the OWs.

5. Perform self-test diagnostics automatically and report malfunctions to the OWs. At a minimum, a report shall be made at:

Copyright © 2002 by ESS engineering, Inc.

a. Failure of any sensor within an RPD's data environment

b. Loss or corruption of the RPD's database and/or configuration

c. Power supply or communications disruption

D. RPD's shall include all point inputs and outputs necessary to perform the specified control sequences. Analog outputs shall be industry standard signals (electric and pneumatic) allowing for interface to a variety of modulating actuators. Controllers utilizing proprietary control signals and actuators shall not be acceptable.

E. If an input point physically associated with a particular RPD fails, control dependent upon that input shall continue based upon the most recent data received, established default value, or an operator definable programmed state.

F. RPD volatile memory shall be provided with battery back up to sustain that memory, in the event of a power outage, for a minimum of seventy-two (72) hours.

G. Each RPD shall be contained within a cabinet that meets or exceeds the NEMA Type 1 Standard. All RPD's shall be master key locked.

H. The EMCS Contractor shall provide a 15 amp duplex receptacle within each RPD or immediately adjacent to the RPD.

I. Each RPD shall be properly equipped to protect itself, other RPD's and the LAN(s) to which they are connected from induced voltage and/or current transients and voltage and/or current spikes or under-voltages which may occur at the RPD power supply, input/output point connections or communications wiring.

J. All RPD's shall be Underwriters' Laboratory (UL) listed against fire and shock hazard as part of a Building Automation System with UL listing number 916. Each RPD shall be able to operate in an ambient environment of 32°F to 135°F and 10% to 90% Relative Humidity.

K. The RPD's shall be configured and installed throughout the site(s) to ensure distributed control of the building systems. Within central plants, heating and cooling equipment shall be controlled via separated controllers with all associated equipment logically grouped into distinct controllers.

L. Input sensors used for fan and pump speed control; e.g., duct static pressure, water differential pressure, etc., shall reside in the same RPD as the associated pump or fan VSD control points.

M. Each RPD shall be provided with a wiring identification schematic and input/output point listing properly protected and secured within the RPD cabinet.

Copyright © 2002 by ESS engineering, Inc.

N. The EMCS Contractor shall be responsible to install any protection necessary to prevent damage from compressed air contaminates to installed pneumatic controllers, transducers or devices.

4.4 APPLICATION SPECIFIC CONTROLLER (ASC)

A. ASCs shall exist on a sub-network or networks of an RPD. Each ASC shall operate as a stand-alone controller, performing specified control functions independent of other ASC's or RPD's. All system setpoints, proportional bands, control algorithms, and any other programmable parameters shall be stored such that a power failure of any duration does not necessitate reprogramming. Additionally, the ASC shall be programmed by means of pre-defined and/or pre-structured "fill-in-the-blank" type software.

B. ASCs may support either BACnet or other communication protocols. For BACnet devices, the ASC shall support the BIBBs corresponding to the BACnet Application Specific Controller (B-ASC) profile as defined in Addendum *d* (Annex K) of the BACnet standard. For non-BACnet devices, an Interface shall be provided such that the ASC appears as a native BACnet device supporting the B-ASC profile as previously mentioned. Refer to Sections 3.5 and 4.2 for additional requirements.

C. Each ASC shall be a microprocessor-based, multi-tasking, digital control processor utilizing its own processor, memory, input/output, analog to digital conversion, clock and voltage transient protection devices. The ASC shall perform its own limit and status monitoring and analysis to maximize network performance by reducing unnecessary communications.

D. ASC's shall include all point inputs and outputs necessary to perform the specified control sequences. Analog outputs shall be industry standard signals (electric and pneumatic) allowing for interface to a variety of modulating actuators. Controllers utilizing proprietary control signals and actuators shall not be acceptable.

E. Each ASC shall be properly equipped to protect itself, other ASC's and the LAN(s) to which they are connected from induced voltage and/or current transients and voltage and/or current spikes or under-voltages which may occur at the ASC power supply, input/output point connections or communications wiring.

F. All ASC's shall be Underwriters' Laboratory (UL) listed against fire and shock hazard as part of an Energy Management System with UL listing number 916. Each ASC shall be able to operate in an ambient environment of 32°F to 135°F and 10% to 90% Relative Humidity.

G. The ASC's shall be configured and distributed such that no more than two (2) zone level HVAC systems (e.g.: VAV boxes, fan coils, mixing boxes), two (2) single zone, packaged units or one (1) air handler of 2000 CFM or greater are associated with any one (1) ASC unless otherwise accepted by the City. Within central plants, heating and cooling equipment shall be controlled via separated controllers with all associated equipment logically grouped into distinct controllers.

Copyright © 2002 by ESS engineering, Inc.

H. The EMCS Contractor shall be responsible to install any protection necessary to prevent damage from compressed air contaminates to installed pneumatic controllers, transducers or devices.

4.5 EQUIPMENT INTERFACES

A. The use of a gateway for OW-RPD, or inter-RPD communications shall not be acceptable. Chiller panel and non-BACnet ASC interfaces shall be acceptable. Said interfaces shall support the BIBBs corresponding to the BACnet Building Controller (B-BC) profile as defined in addendum *d* (Annex K) of the BACnet Standard.

B. The EMCS Contractor shall be responsible for all programming and database development required to satisfy the requirements of the Specification. This includes entering of point descriptors, setting alarm limits, and all other Interface software related functions as specified. Interfaces shall be bi-directional and BACnet compatible as described above to provide transparent operation.

C. The EMCS Contractor shall perform all programming work required to configure the Interface(s) and to convey all I/O points in a meaningful and complete manner including English-language descriptors, appropriate engineering units, and actual control function. Unless stated otherwise, all input values shall be displayed in standard units as appropriate to HVAC applications (e.g., ºF, gpm, psi, %RH, on/off, open/closed, etc.). In addition, all output values shall be configured to display their state as appropriate to applications (e.g., % open, output pressure, output current, output resistance, output voltage, open/closed, on/off, etc.).

4.6 INPUT/OUTPUT POINT CHARACTERISTICS

A. Each RPD and ASC shall provide the hardware and software required to support an I/O point configuration of Analog Inputs (AI), Analog Outputs (AO), Digital Inputs (DI), Digital Outputs (DO), and/or Totalizer Inputs (TI). The RPD's and ASC's furnished shall provide for all points identified within the Input/Output Point Summary Tables and as required to meet the Specification.

B. Each RPD installed shall provide at least ten (10) percent of each I/O point type available for future use with a minimum of two (2) unused points of each I/O type provided of the RPD configuration installed. RPD sub-controllers (ASC's) that offer low-cost I/O expansion may be fully addressed at time of installation (without "free points").

4.6.1 ANALOG INPUT (AI)

A. The RPD and ASC shall monitor each AI point and perform Analog-to-Digital (A-to-D) conversion. A-to-D conversion shall be executed with a minimum 12-bit resolution. The ranges of analog inputs shall include at least 4-20 mA, 0-10 Vdc, and assignable functions for use with

Copyright © 2002 by ESS engineering, Inc.

standard Resistance Temperature Detectors (RTD's) and/or standard thermistors for any AI address.

B. AI capability shall provide common mode noise rejection of 60 dB from 0 to 120 Hz and normal mode noise rejection of 20 dB at 60 Hz from source impedance of 10,000 ohms. All AI connections shall be provided with surge protection to withstand up to 180 Vac peak input without controller damage.

4.6.2 ANALOG OUTPUT (AO)

A. The RPD and ASC, based upon digital data received or information processed shall perform Digital-to-Analog (D-to-A) conversion and output a true analog signal including 4-20 mA or 0-10 Vdc and other industry standards as required per application. D-to-A conversion shall be performed with a minimum 10-bit resolution. All AO's shall be of a proportional current or voltage type with a minimum incremental resolution of 0.5 percent of the full operating range of the actuator or controller to which the AO is interfaced.

B. Where required, electric to pneumatic transducers shall be installed in conjunction with the AO to provide a pneumatic output compatible with the pneumatic actuator or controller being interfaced to the EMCS (e.g., 0-15psi). Such transducers shall respond to an RPD or ASC failure or power loss as noted by the Failure Mode on each Input/Output Point Summary Table.

C. Each AO point specified shall be unique to the specific function and/or device identified and shall not be used to provide an analog output to any other device unless specifically noted within the Specification or Input/Output Point Summary Tables. All RPD and ASC AO's shall be able to be interrogated by an OW to examine their present commanded value or state and configuration.

D. The EMCS Contractor shall be responsible to install any protection necessary to prevent damage from compressed air contaminates to installed pneumatic controllers, transducers or devices.

4.6.3 DIGITAL INPUT (DI)

A. The RPD and ASC shall accept discrete data indications at any DI point. Such data shall be interpretable as on/off, open/closed or any other binary condition. Each DI point shall be furnished with surge protection to withstand up to 180 Vac peak input without device failure.

4.6.4 DIGITAL OUTPUT (DO)

A. The RPD and ASC shall provide discrete outputs capable of both maintained and momentary contact. Each DO contact shall be capable of either being opened, closed and pulsed closed. Each DO point shall be furnished with surge protection to withstand up to 180 Vac peak

Copyright © 2002 by ESS engineering, Inc.

without device failure. DO contacts shall be capable of sustaining a constant load of 2 amps at 24 Vac without failure.

B. Each DO shall be capable of either a failed open or closed connection. A failure shall consist of either an RPD or ASC loss of configuration/database memory or power. The operational status of controlled equipment associated with a failed RPD or ASC is further detailed in Section 6.6 and the Input/Output Point Summary tables.

4.6.5 TOTALIZER INPUTS (TI)

A. The RPD and ASC shall provide for discrete inputs configurable as pulse accumulator points at which the controllers shall totalize rates of pulsed inputs up to 20 pulses per second of a minimum pulse-width of 10 milliseconds. TI contacts shall be able to withstand up to 180 Vac peak input without device failure.

B. The pulse accumulator shall be capable of accumulating a single pulse over any length of internal sampling time.

4.7 SENSORS AND ACTUATORS

A. The EMCS Contractor shall furnish and install all instrumentation, actuators, transducers, and sensors as required by the Scope of Work as defined in the Supplemental Specification(s). The accuracy and range of sensors vary by application, and are detailed in the following sections. For applications where a specific range has not been specified, the EMCS Contractor shall be responsible for proper selection. All applications listed may not be included within the scope of work.

B. The term "accuracy" as used herein refers to net measurement accuracy from sensor to the RPD or ASC received and/or displayed value. Demonstration of the specified accuracy shall be the EMCS Contractor's responsibility as per the Commissioning requirements of Section 3.4. The EMCS Contractor shall be responsible for incorporating calibration correction equations, offsets and/or slopes into the RPD or ASC configuration as needed.

C. The Input/Output Point Summary Tables and schematic information provided in the Supplemental Specification(s) indicate the points to be monitored and controlled. Actual EMCS field installation methods and procedures are the EMCS Contractor's responsibility. The EMCS Contractor shall also comply with all installation procedures and recommendations of the instrumentation manufacturer(s).

D. For all pipe temperature, flow rate and pressure instrumentation, the EMCS Contractor shall be responsible for the repair, seal, and refinish of any and all existing pipe insulation disturbed by the work. Said insulation repair shall be performed in a neat and professional manner. The

Copyright © 2002 by ESS engineering, Inc.

sensor point of connection/termination shall extend beyond the insulation height. All pipe instrumentation (components and installations) shall withstand at least 125-psi service pressure.

4.7.1 TEMPERATURE SENSORS

A. All temperature sensors shall be direct-connection, resistance type temperature devices including 1,000-Ohm linear RTD's, 10,000 or 100,000-Ohm thermistors, or approved alternative. Use of thermocouples shall not be acceptable. Table 3.6.1.1 displays the minimum temperature sensor range and accuracy (over the entire specified range) required.

TABLE 3.6.1.1
MINIMUM TEMPERATURE SENSOR RANGE AND ACCURACY

Application	Range	Accuracy
Chilled Water Temperature	25-90°F	+/- 0.1°F
Condenser Water Temperature	30-125°F	+/- 0.1°F
Ducted Air Temperature	0-140°F	+/- 0.5°F
Space Temperature	40-100°F	+/- 0.5°F
Outside Air Temperature	-40-125°F	+/- 0.5°F
Heating Water/DHW Temperature	50-200°F	+/- 0.2°F

B. All water, pipe and tank temperature input points shall be satisfied using well-type sensors. The use of strap-on type sensors or direct immersion sensors shall not be acceptable. The EMCS Contractor shall be responsible for providing taps, wells, and related mechanical work as required. All pipe temperature wells shall be stainless steel and of continuous stock (no welded sections) with a minimum 3/4" NPT process connection. Well/sensor lengths shall be selected such that the temperature sensor is submersed at least one-third (1/3) the inner pipe diameter into the flow. Pipe insulation around wells shall be repaired, sealed and refinished in a professional manner to minimize heat loss/gain and prevent moisture penetration to the well or pipe surface. Wells shall be "hot tap" installed as required to accommodate customer requirements and shall be filled with thermally conductive compound.

C. Duct temperature sensors shall be either single point type or averaging type, per specification drawings, I/O Tables or as required per the application.

D. Space temperature sensors shall be located to avoid ambient influence and field verified with the City prior to installation. In general access areas, space temperature shall be monitored via a vandal and tamper proof, flat-plate type, flush-mounted, wall sensor. Space sensors installed within offices and work areas shall be wall mounted and shall incorporate adjustment, indication, and LAN communication capabilities. Sensor colors shall be coordinated with the City prior to installation.

E. Outside air temperature sensor(s) shall be installed in a location with suitable airflow across the sensor and in a continuously shaded location, or mounted with a sun shield. The sensor shall be installed in a manner to guard against any external effects that would prevent accurate

Copyright © 2002 by ESS engineering, Inc.

monitoring of ambient conditions. Prior to installation the City shall approve proposed sensor location.

F. All temperature calibration data shall be documented and submitted in a format that reflects all the parameters and measurements described above, and submitted as part of the Calibration Commissioning documentation.

4.7.2 RELATIVE HUMIDITY SENSORS

A. Relative humidity sensors shall be solid state, thin-film capacitive-type sensors. Table 3.6.2.1 displays the relative humidity sensor range and minimum accuracy.

TABLE 3.6.2.1
MINIMUM HUMIDITY SENSOR RANGE AND ACCURACY

Application	Range	Accuracy
Space Relative Humidity	20-80% RH	+/- 5% RH
Ducted Air Relative Humidity	0-95% RH	+/- 5% RH
Outside Air Relative Humidity	0-95% RH	+/- 5% RH

B. The outside air relative humidity sensor shall be installed in a location with suitable airflow across the sensor and in a continuously shaded location or under a sun shield. The sensor shall be installed in a manner to guard against any external effects that would prevent accurate monitoring of ambient conditions. The City shall approve the proposed sensor location.

4.7.3 PIPE FLOW SENSORS

A. Flow sensor range shall be from zero (0) flow to one hundred and fifty (150) percent of the maximum rated flow for each application and be of industrial grade. Minimum accuracy at full scale shall be ± 2.0 percent of full scale. All flow meters shall be supplied with documentation of factory calibration and factory installation instructions.

B. “Hot-tapped” turbine insertion type meters shall be used as noted on the drawings. The meters permit isolation, retraction and replacement of the sensor for service without interrupting or affecting the application monitored. To the greatest degree practicable, all meters shall be installed in locations characterized by “fully developed” flow; i.e., installed 10 diameters downstream within a 15-diameter straight and unobstructed length of piping. Turbine insertion meters shall be equivalent to the ONICON F-1100 (single turbine probe) for "fully developed" flow locations and the ONICON F-1200 (dual turbine probe) for less than "fully developed" locations.

C. Ultrasonic flow meters shall be used as noted on the drawings. Said meters shall utilize ‘transit-time” technology and be installed outside the pipe per factory instructions. To the greatest degree practicable, said meters shall be installed in locations characterized by “fully developed”

Copyright © 2002 by ESS engineering, Inc.

flow; i.e., installed 10 diameters downstream within a 15 diameter straight and unobstructed length of piping. Ultrasonic flow meters shall be equivalent to the Panametrics XMT868.

4.7.4 PRESSURE SENSORS

A. Pressure sensor range and accuracy shall vary by application. All analog pressure sensors/transducers and differential pressure switches shall withstand a minimum of one hundred and fifty (150) percent of the maximum rated pressure of each application. Factory calibration shall provide pressure sensor accuracy of ± 1.0 percent of full scale.

4.7.5 ELECTRIC / PNEUMATIC TRANSDUCER

A. Electric to Pneumatic Transducers shall be provided in conjunction with I/O's as required and provide a proportional signal compatible with new or existing pneumatic control actuators. The transducer shall withstand one hundred and fifty (150) percent of rated pressure and be provided pressure calibration adjustment. The pneumatic output signal shall be in proportion to the electric input signal and provide output to within +/- 1.0% of the provided input signal.

4.7.6 PNEUMATIC / ELECTRIC TRANSDUCER

A. Pneumatic to Electric Transducers shall be provided in conjunction with I/O's as required and provide a proportional signal compatible with existing pneumatic signals. The transducer shall withstand one hundred and fifty (150) percent of rated pressure and be provided pressure calibration adjustment. The electric input signal shall be in proportion to the pneumatic input signal

4.7.7 DAMPER / VALVE ACTUATORS

A. Dampers and Valves shall be motorized for binary and/or analog output control via the EMCS as specified. Damper/Valve actuators shall be electrically or pneumatically powered as appropriate for each specified application and valve type. Actuators specified to fail "last command" shall be powered in both directions.

B. Damper actuators shall be selected per manufacturer's recommendations to provide sufficient close-off force to effectively seal damper and to provide smooth modulating control under design flow and pressure conditions.

C. Valve actuators shall provide tight close off at design system pressure, and shall provide smooth modulation at design flow and pressure conditions. The EMCS Contractor shall be responsible for proper actuator selection and functional compliance with each specified failure mode.

Copyright © 2002 by ESS engineering, Inc.

4.7.7.1 Electronic Actuators

A. The actuator shall have electronic overload or digital rotation sensing circuitry to prevent damage to the actuator throughout the rotation of the actuator.

B. All rotary spring-return actuators shall be capable of both clockwise and counter-clockwise spring return operation. Linear actuators shall spring return to the retracted position.

C. Proportional actuators shall accept a 0 to 10 VDC or 0 to 20 mA control signal and provide a 2 to 10 VDC or 4 to 20 mA operating range.

D. All non-spring return actuators shall have an external manual gear release to allow manual positioning of the damper when the actuator is not powered. Spring return actuators with more than 60 in-lb torque capacity shall have a manual crank for this purpose.

E. All modulating actuators shall have an external, built-in switch to allow the reversing of direction of rotation.

4.7.7.2 Pneumatic Actuators

A. Pneumatic actuators shall be piston-rolling diaphragm type, or diaphragm type with easily replaceable beaded, molded, neoprene diaphragm.

B. Actuator size and spring ranges selected shall be suitable for the intended application.

C. Central Plant Isolation Valve actuators shall be equipped with an override hand wheel to rotate the valve without control air. The override assembly shall ensure positive and fast manual operation without the use of extra tools or levers. When the hand wheel is engaged in manual operation, the control air to the motor actuator shall be locked-out to prevent automatic operation.

D. Positive positioners shall be provided on actuators for inlet vane control and on any other actuators where required to provide smooth modulation on proper sequencing.

E. Positive positioners shall have the following performance characteristics:

1. Linearity: ± 10% output signal span
2. Hysteresis: 3% of the span
3. Response: 1/4 psig input change
4. Maximum pilot signal pressure: 20 psig
5. Maximum control air supply pressure: 100 psig

Copyright © 2002 by ESS engineering, Inc.

F. Positive positioners shall be high-capacity force balance relay type with suitable mounting provisions and position feedback linkage tailored for the particular actuator.

G. Positive positioners shall use full control air pressure at any point in stem travel to initiate stem movement or to maintain stem position. Positioners shall operate on a 3 to 15 psig input signal unless otherwise required to satisfy the control sequences of operation.

4.7.8 CONTROL VALVES

A. Control valves shall be two-way or three-way types for two-position or modulating service as shown on the specification drawings.

B. Close-off (differential) Pressure Rating: Valve actuator and trim shall be furnished to provide the following minimum close-off pressure ratings:

1. Water Valves:

   a. Two-way: 150% of total system (pump) head.

   b. Three-way: 300% of pressure differential between ports A and B at design flow or 100% of total system (pump) head.

2. Steam Valves: 150% of operating (inlet) pressure.

4.7.8.1 Water Valves

A. Body and trim style and materials shall be per manufacturer's recommendations for design conditions and service shown, with equal percentage ports for modulating service.

1. Sizing Criteria:

   a. Two-position service: Line size.

   b. Two-way modulating service: Pressure drop shall be equal to twice the pressure drop through heat exchanger (load), 50% of the pressure difference between supply and return mains, or 5 psi, whichever is greater.

   c. Three-way modulating service: Pressure drop equal to twice the pressure drop through the coil exchanger (load), 35-kPa [5 psi] maximum.

   d. Valves ½" through 2" shall be bronze body or cast brass ANSI Class 250, spring-loaded, Teflon packing, quick opening for two-position service. Two-way valves to have replaceable composition disc, or stainless steel ball.

Copyright © 2002 by ESS engineering, Inc.

e. 2½" valves and larger shall be cast iron ANSI Class 125 with guided plug and Teflon packing.

B. Water valves shall fail as specified on the Input/Output Summary Tables.

4.7.8.2 Steam Valves:

A. Body and trim materials shall be per manufacturer's recommendations for design conditions and service. Linear ports for modulating service.

1. Sizing Criteria:

a. Two-position service: pressure drop 10% to 20% of inlet psig.

b. Modulating service: 100 kPa [15 psig] or less: pressure drop 80% of inlet psig.

c. Modulating service: 101 to 350 kPa [16 to 50 psig]: pressure drop 50% of inlet psig.

d. Modulating service: over 350 kPa [50 psig]: pressure drop as scheduled on plans.

4.7.8.3 Isolation Valves

A. Valves greater than 2-1/2 in. used for central plant diversion of chilled and/or condenser water shall be butterfly type, cast-iron body rated at 200 psi conforming to ASTM A 126, Class B.

1. Sizing Criteria: Line Size

B. Valves shall be provided with field replaceable EPDM sleeve, nickel-plated ductile iron disc (except aluminum bronze disc for valves installed in condenser water piping), stainless steel stem, and EPDM O-ring stem seals.

4.7.9 ELECTRICAL POWER AND CURRENT TRANSDUCERS

A. Power and Current transducers shall be of proper range and accuracy for each application specified to provide +/-0.5 percent of full-scale accuracy. The accuracy specified shall include the effects of current transducers for power measurements. The transducers shall be capable of monitoring both balanced and unbalanced loads without loss of accuracy and shall withstand one hundred and fifty (150) percent of maximum rated power/current. The transducer range shall be selected such that the maximum value shall be one hundred and fifty (150) percent of the nominal value being monitored.

Copyright © 2002 by ESS engineering, Inc.

B. Power transducers shall be able to accurately determine the phase relationship between the voltage and current (power factor) and provide "true" power (watts) as the output signal. The transducers shall be capable of measuring true root-mean-square (RMS) values for single and three-phase (3-wire and/or 4-wire) loads to provide accurate readings for a non-sinusoidal waveform.

C. Power and current transducers shall be installed per factory instructions and field validated by use of a calibrated reference wattmeter and/or ammeter of one (1) percent certified accuracy or better. Deviations in the readings between the reference meter and installed equipment that are greater than five (5) percent shall not be acceptable and shall require installation and/or factory calibration correction.

4.7.10 CURRENT SWITCHES

A. A current switch shall satisfy all fan and pump status points. The current switch shall be able to sense and provide an output signal for a load as small as one (1) amp. Internal circuitry shall be powered by induction from the conductor being monitored.

B. The current switch shall be of the "split" type, so that installation can be made without disturbing existing wiring connections.

4.7.11 CARBON DIOXIDE GAS SENSORS

A. The Carbon Dioxide (CO_2) sensor shall consist of a single beam, non-dispersive infrared (N.D.I.R.) element. The sensor range and accuracy shall be 0-2,500 ppm and 50 ppm CO_2, respectively. Sensors shall be provided that are “factory calibrated”. Field validation of the sensors shall be performed to identify sensors that do not report nominal values when compared with other sensors. Validation shall be performed by locating all sensors in the same duct location within one (1) foot of each other. Sensor output values shall be monitored for a period of 24 hours while the air handler is operating, trending each point at one (1) minute intervals. The average values of the group shall be used as the “standard” for the group. Any sensor whose average value deviates from the group standard value by more than the stated accuracy (50 ppm) shall be returned to the factory for replacement.

B. All sensor calibration data shall be documented and submitted in a format that reflects all the parameters and measurements described above, and submitted as part of the Calibration Commissioning documentation.

Copyright © 2002 by ESS engineering, Inc.

This page intentionally skipped.

Copyright © 2002 by ESS engineering, Inc.

5.0 EMCS COMMUNICATIONS

A. The EMCS shall utilize the City's WAN for inter-building and OW-building communication. Each individual building's Local Area Network (LAN) shall be used for intra-building communications. The following sections detail the requirements of each network and corresponding EMCS Contractor.

5.1 WIDE AREA NETWORK

A. The EMCS Contractor shall coordinate with the City to ensure a WAN connection is available at the designated site(s). The WAN connection(s) to each building may include fiber optic, T1, or a frame relay.

B. The EMCS Contractor shall submit a request in writing for each building's WAN connection to the City sixty (60) days in advance.

C. The EMCS Contractor shall provide BACnet IP Routers (BIPR) at each building and OW for inter-building and OW communications over the WAN. Said BIPRs shall conform to Annex J of ANSI/ASHRAE Standard 135-1995, BACnet. The EMCS Contractor shall also coordinate with the City's IT department to ensure proper addressing of each BIPR onto the WAN.

D. The EMCS Contractor shall coordinate with the OWN Contractor to ensure proper interaction between the BIPR and LAN in each building.

E. BACnet network numbers and Device Object_IDs shall be unique throughout the WAN. All assignment of network numbers and Device Object_IDs shall be coordinated with the City.

F. All communications equipment shall be provided protection against surges and sags induced on any communications link. Surge protection circuits shall be provided at each end of communication links between equipment at all building penetrations.

5.2 LOCAL AREA NETWORK

A. The EMCS Contractor may utilize the site Local Area Network (LAN) components that connect vendor-specific hardware to each building's LAN concentrator/hub. The LAN shall serve as the digital data transmission communication system(s) to which RPDs and interfaces are connected.

B. Each building's LAN shall support BACnet/Ethernet or BACnet/IP and shall share a common network number, as defined in BACnet. Network numbers shall be changeable via software for any device. Network numbers shall be defined in coordination with the City. The EMCS

Copyright © 2002 by ESS engineering, Inc.

Contractor shall coordinate with the City to ensure proper integration into the existing building network.

C. The EMCS Contractor shall provide devices that conform to Addendum 135a, BACnet/IP, for LAN communications. In this case, the EMCS Contractor shall submit to the City a device list, for those devices that require IP addresses within each building and, coordinate with the City's IT department to ensure proper integration into the network.

D. Each building's LAN shall be continuous, hard-wired media. Power-line carrier communication shall not be acceptable for communications. The LAN serves as the inter-RPD/interface and MTS to RPD, communications path. The LAN shall include all wiring, connections, and hardware required to achieve all EMCS communications capabilities of the Specification. The Ethernet LAN wiring shall meet the requirements of Category 5 of standard TIA/EIA 568 (10BaseT).

E. The City shall provide Ethernet 10BaseT ports in each building for use by the EMCS Contractor as required and/or as outlined in the Supplemental Specifications.

F. The EMCS Contractor shall be responsible for associated connections/cabling from Ethernet ports to vendor-specific hardware and shall coordinate with the OWN Contractor to ensure proper interaction between the LAN and BIPR in each building

G. The inter-RPD/interface minimum data transmission speed within each LAN shall be 10 Mbps or greater.

H. ASCs may reside on the same network as the RPDs/equipment interfaces, should the vendors' system require this type of configuration. If an ASC is on a different network, and is a native BACnet device, BACnet routers capable of communicating between Ethernet and the LAN technology of the ASC network, be it ARCNET, MS/TP, or LonTalk, shall be provided by the EMCS Contractor. The routers shall be capable of routing Application Protocol Data Units (APDUs) of at least 206 octets in length in each case. If the ASCs are not native BACnet devices, an interface, or interfaces, must be provided that permit the ASCs to appear on the network as if they were native BACnet devices supporting the BIBBs corresponding to the BACnet Application Specific Controller (B-ASC) profile as defined in Addendum 135*d* (Annex K) of the BACnet standard. The interface(s) shall also support the objects and properties such that all addressable hardware and software points appear as native BACnet objects with required properties as described in Section 5.4

I. The LAN shall be based upon a wiring configuration that permits the inclusion of additional RPD/ASCs or removal of existing RPD/ASCs with minimal disruption to monitoring, control, or communications throughout the LAN. The wiring configuration of the LAN shall provide for a minimum EMCS disruption in the event of a LAN, RPD, or ASC system failure.

Copyright © 2002 by ESS engineering, Inc.

J. The minimum acceptable RPD-to-ASC and ASC-to-ASC data transmission speed within the LAN shall be 56,600 baud.

5.3 BACNET REQUIREMENTS

A. All provisions of the ASHRAE/ANSI Standard 135-1995, BACnet, shall apply. Each BACnet device in the EMCS shall utilize a unique Device ID.

5.3.1 OBJECT AND NAME REQUIREMENTS

A. For each EMCS point, a specific and unique BACnet object name shall be required. All point names shall adhere to the format as established below.

B. Said points shall include; all physical I/O points, calculated points used for standard reports, per Section 6.1.1, and all application program parameters, per the Supplemental Specification(s).

C. A consistent object (point) naming convention shall be utilized to facilitate familiarity and operational ease across an eventual large inventory of facilities. It shall be the responsibility of the EMCS Contractor to coordinate with the City's representative, facility operators, and/or managers, and compile and submit a proposed Point Summary Table for review prior to any object name programming.

D. Inter-facility consistency shall be maintained to ensure transparent operability to the greatest degree possible. Table 4.3.3.1 details the object naming convention and general format of the descriptor string. Note, however, that these are recommendations only and it is the responsibility of the EMCS Contractor to coordinate naming conventions with the City.

E. For each point, four (4) distinct descriptors shall be linked to form each unique object name; *Building*, *System*, *Equipment*, and *Point*. Note that all keyboard characters except a space are allowable. Each of the four descriptors must be bound by a symbol; e.g., dash, underline, etc., to form the entire object name. Reference paragraph F below for an example of these descriptors.

F. The *City shall designate the Building descriptor*. The *System* descriptor shall further define the object in terms of air handling, cooling, heating, etc. The *Equipment* descriptor shall define the specific equipment; i.e., Chiller-1, Airhandler-3, etc. The *Point* descriptor shall define the hardware or software type or function associated with the equipment; i.e., supply temperature, water pressure, alarm, mixed air temperature set point, etc.

Copyright © 2002 by ESS engineering, Inc.

TABLE 4.3.3.1
BACNET OBJECT NAME REQUIREMENTS

Descriptors		Comment
Building	PHYS_PLANT TCC-THEATER	
System	AIR-HANDLING EXHAUST HEATING COOLING UTILITY END-USE MISCELLANEOUS	 Boilers and ancillary equipment Chillers and ancillary equipment Main electrical and gas meters Specific building loads by type
Equipment	AHU-1 CHLR-3 CHILLER BLR-1 BOILER MISCELLANEOUS	 Non-specific chiller system points Non-specific boiler system points
Point	See Input/Output point summary tables	

G. Within each object name, the descriptors shall be bound by an underline, and within each descriptor, words shall be separated by dashes as follows:

1. City-Hall_Heating_Boiler_Hot-water-supply-setpoint

2. Rich-Theater_Cooling_Chiller-1_Chilled-water-return-temperature

H. The above point naming scheme is designed to completely eliminate any confusion between individual points in a facility wide EMCS installation. This point identifying system shall be used in the EMCS Contractors point description area in the EMCS software and point-identifying matrixes across an Interface. The EMCS Contractor may use an alternate naming convention on the control drawings if a matrix is supplied in the control drawings referencing each point to this naming convention. However, this alternate naming convention shall be coordinated with an approved by the City. These point descriptions are not required to be displayed on the monitor screens as built by the OW Contractor.

5.4 DEVICE OBJECT ID CONVENTION

A. Each device Object_Identifier (Object ID), the seven (7) digit BACnet number which identifies a specific individual RPD, Interface, Field Device or ASC, shall be unique throughout the BACnet installation and shall be assigned in the following manner:

BBBMMDDD, where BBB = Number as provided by the COT
MM = Associated RPD number
DDD = Field Device or ASC number

Copyright © 2002 by ESS engineering, Inc.

B. The COT facilities department has devised a matrix to assign the BBB number. This number must be coordinated with the COT to ensure that the BBB assignment is not duplicated.

C. The following BACnet EMCS system identifying numbers are required from any EMCS Contractor and must be supplied to the OWN Contractor and the City for coordinating the mapping of points to the existing OW from any installed BACnet EMCS installation.

1. Network number: - The BACnet network number cannot be duplicated across the COT's WAN and must be coordinated with the COT facilities department.

2. MAC Address: - The network Media Access Control (MAC) address must be coordinated with the COT's IT department.

3. IP Address: - The network IP address must be coordinated with the COT's IT department.

4. Object_Identifier: - The BACnet Object ID must be unique throughout the BACnet installation and must be coordinated with the COT facilities department using the numbering scheme as shown in Section 5.4, A and B.

5. Point_Identifier: - **All BACnet point identifying numbers or notations** (point number, 456 or Analog Input AI1, etc.) and the corresponding point description must be supplied to the OWN Contractor and to the COT to facilitate mapping of individual points to the OW monitor screens.

D. Numbered point identifiers are normally assigned by Interface devices and AI1, DI2 etc. are assigned by "native" BACnet systems. However, the EMCS Contractor is responsible for any and all identifying point information, and shall be supplied to and coordinated with the OWN Contractor and the COT.

5.5 CONTRACTOR RESPONSIBILITY

A. There are various coordination efforts required of the three basic entities (EMCS Contractor, OWN Contractor and COT) associated with the successful integration of different vendor's BACnet devices into the COT EMCS WAN. Each contractor and the COT must communicate and share the necessary information to ensure the EMCS installation performs as required by this EMCS Guideline.

Copyright © 2002 by ESS engineering, Inc.

5.5.1 EMCS CONTRACTOR

A. The EMCS Contractor shall be responsible for the following:

1. All EMCS equipment up to and including the cabling connecting their EMCS installation into the COT's WAN. The COT shall be responsible for supplying the Ethernet jack and or hub connection unless otherwise stated in the Supplemental Specifications.

2. Coordinating with the COT IT department for MAC and IP address assignments.

3. Coordinating with the COT any BACnet Network numbers.

4. Coordinating with the COT any Object_Identifier numbering assignment.

5. Coordinating with the OWN Contractor and COT all point identifying information to include but not limited to: Analog, Binary, Analog data points, Binary data points, set points, scheduling points, hard and software points to facilitate point mapping on the OW monitor screens to ensure a properly monitored system.

6. The EMCS Contractor shall supply the Control Drawings (in electronic form, Auto Cad) and any Floor Plans that designate EMCS component location to the OWN Contractor and the COT to facilitate the development of OW monitor screens.

7. The EMCS Contractor shall coordinate with the OWN Contractor to ensure that no duplicate Object IDs occur.

5.5.2 OWN CONTRACTOR

A. The OWN Contractor shall be responsible for the following:

1. Coordinating with the COT any monitor screen development including digital pictures, floor plan presentation, text screens, point mapping selection and graphic presentation.

2. Coordinating with the EMCS Contractor to obtain the necessary identifying information to facilitate point mapping (including network numbers, MAC and IP addresses) to monitor screens on the OW.

3. Coordinating with the EMCS Contractor to obtain the EMCS installation Control Drawings and Floor Plans.

4. The OWN Contractor shall coordinate with the EMCS Contractor to ensure that no duplicate Object IDs occur.

Copyright © 2002 by ESS engineering, Inc.

5.5.3 THE CITY OF TUCSON

A. The COT shall be responsible for the following:

1. Provide a connection to the Ethernet for the EMCS installation (provide a Jack or Hub connection) as required by the EMCS Contractor.

2. Coordinate the assignment of MAC and IP addresses required for the EMCS installation.

3. Coordinate the assignment of BACnet network numbers with the EMCS Contractor.

4. Coordinate the assignment of Object_Identifier numbers with the EMCS and OWN Contractor.

5. Coordinate the development of EMCS monitor screens and point mapping with the OWN Contractor.

5.6 OBJECTS AND PROPERTIES

A. In addition to the required properties defined in the BACnet standard, certain optional properties are required by this Specification. Objects not specifically detailed below shall conform to the standard as written. It shall also be possible to create and delete Calendar, Group and Schedule objects. The quantity that may exist concurrently shall be indicated in the Dynamically Creatable column of the Protocol Implementation Conformance Statement (PICS).

5.6.1 ANALOG INPUT, OUTPUT, VALUE

A. Each of these object types must support the Reliability property. In addition, the Out_Of_Service property of each object shall be writable using BACnet WriteProperty services.

5.6.2 BINARY INPUT, OUTPUT, VALUE

A. Each of these object types must support the Reliability property. In addition, the Out_Of_Service property of each object shall be writable using BACnet WriteProperty services.

5.6.3 LOOP

A. Instances of the Loop object type must support the Reliability and Update_Interval properties. Also, the Out_Of_Service property shall be writable using BACnet Write Property services. The Setpoint, Prorportional_Constant, Integral_Constant, Derivative_Constant, and Bias properties shall be writeable using BACnet services.

Copyright © 2002 by ESS engineering, Inc.

5.6.4 MULTI-STATE INPUT, OUTPUT

A. Each of these object types must support the Reliability property.

5.7 SYSTEM RESPONSE

A. The following sections define the maximum system response times that shall be permitted within the EMCS Network.

5.7.1 CONTROLLER

A. Any change of state or value of an input/output point within the direct data environment of a controller shall be received by the controller and update memory within three (3) seconds of the time of occurrence.

5.7.2 WIDE AREA NETWORK

A. Changes of state or value of real or pseudo input/output points associated with a controller anywhere on the WAN and required by any other controller(s) shall be transmitted to the other controller(s) on the WAN within five (5) seconds of time of occurrence in the originating controller.

B. The City's existing fiber-optic network will be used as the transport mechanism for the OW and RPD inter-communications.

5.7.3 OW ACCESS

A. The OWs shall interface with the EMCS network such that no more than five (5) seconds shall elapse between the time a change of state or value associated with any controller occurs and the OWs receives the data and updates local memory.

B. Whenever an operator of an OW is displaying a real-time dynamic listing or color graphic, associated changes of state or value in any controller shall be updated on that display within five (5) seconds of occurrence. If the dynamic display's update interval is operator definable, each display shall be assigned an initial update interval of no greater than five (5) seconds.

C. Any command issued by an OW to any controller, either directly by an operator or through software, shall be received and acted upon by the controller within five (5) seconds of issuance.

D. An operator-issued command which requests the display of any EMCS data, color graphic or report shall be acted upon and completed by the OW within ten (10) seconds of issuance.

Copyright © 2002 by ESS engineering, Inc.

5.7.4 MTS ACCESS

A. The MTS shall interface with individual building EMCS network such that, when connected to the EMCS via modem, no more than ten (10) seconds shall elapse between the time a change of state, value or alarm condition associated with any of the building's controller occurs and the MTS receives the data and updates local memory.

B. While connected via modem, whenever an operator of an MTS is displaying a real-time dynamic listing or color graphic, changes of state or value in any controller associated with that building, shall be updated on that display within ten (10) seconds of occurrence. If the dynamic display's update interval is operator definable, each display shall be assigned an initial update interval of no greater than ten (10) seconds.

C. Any command issued by an MTS (while connected via modem) to any controller on that specific building, either directly by an operator or through software, shall be received and acted upon by the controller within ten (10) seconds of issuance.

5.8 ALARM ANNUNCIATION

A. The EMCS Contractor shall provide all software and hardware as specified to satisfy the requirements of the Alarm Annunciation functions as described herein. All alarm function software shall be developed and incorporated into the EMCS and shall permit ease and flexibility of functional capability, expansion, and revision.

5.8.1 OW ALARM ANNUNCIATION

A. Alarms that are directed toward the OWs from the buildings shall be annunciated at the OWs and/or the alarm printer within thirty (30) seconds. If, in the event the OWs are off-line, the alarm and subsequent remote annunciation sequence shall be initiated and the City's EMCS shall continue to attempt connection with the OWs or alarm printers until such time that it does make connection and reports the alarm. Said annunciation sequence shall not impair any OWs functionality.

5.8.2 PAGER SYSTEM

A. Pager Alarm Annunciation shall provide for automatic EMCS operator paging subsequent to EMCS alarms. The EMCS Contractor shall provide all hardware and software (not including pagers) for the purpose of directing any and all alarms as required by the City to any or all pager(s) (up to 10 with unique pager numbers) as assigned by the City. The software provided shall allow an operator to add and delete any or all alarms to any or all pagers. Whenever any such alarm occurs, the EMCS shall activate the pager system and begin a pre-programmed sequence to contact the EMCS operator(s) via an alphanumeric pager and display a pre-defined alarm message of up to 40 alpha-numeric characters in length.

Copyright © 2002 by ESS engineering, Inc.

B. All occurrences of Pager Alarm Annunciation shall require an operator acknowledgment of the alarm through an OW. Unacknowledged alarms shall continue to be re-annunciated (paged) once every ten- (10) minutes or until the alarm condition returns to a normal (non-alarm) condition. If an alarm has not been acknowledged within three (3) attempts (30 minutes), a second pager shall be contacted as above. If after (3) attempts (30 minutes), a third pager shall be contacted and after (3) attempts (30 minutes) the routine shall start from the beginning until the alarm has been acknowledged. The number of attempts and frequency shall be adjustable. Acknowledged alarms shall not be annunciated. Alarms that have been acknowledged and which subsequently return to a normal (non-alarm) state shall require re-acknowledgment by an operator in the event of a new alarm condition.

Copyright © 2002 by ESS engineering, Inc.

6.0 SOFTWARE REQUIREMENTS

A. The EMCS Contractor shall provide all software to satisfy the intent and requirements of the Specification. All software functions shall be developed and incorporated into the EMCS in a modular form that permits ease of functional capability, expansion, and revision.

B. All software described herein shall function without the use of hardware locks.

C. The operating system of the RPD's and ASC's shall be a multi-tasking, real-time based system.

6.1 OPERATOR WORKSTATION NETWORK

A. The existing Operator Workstation Network (OWN) consists of two (2) Alerton front-ends running BACtalk for Windows software. The OWN communicates to the system components over the BACnet-based WAN.

6.1.1 STANDARD REPORTS

A. An operator of appropriate access level shall be able to request standard reports through any OWN interface. Each standard report shall be presented in a logical, English-language format, which conveys information in a concise and clear manner. Each report shall be capable of being directed to a host station monitor, a printer, or a disk file.

B. The EMCS Contractor shall ensure that the software installed under the scope of work, as defined in the Supplemental Specification(s), shall support the existing standard reports. The following standard reports currently exist on the OWN:

1. **All Points Summary:** Tabular report of all physical and/or software calculated points associated with each RPD and ASC of a building including point type, English-language point description, current state or value, and functional status. The report shall be presented with points logically grouped by equipment, function and/or type.

2. **Active Alarms Report:** Tabular report of all alarms currently active in any or all buildings.

3. **Setpoint Summary:** Summary of all command able setpoints in the EMCS including current setting, English-language point description, the equipment and the RPD's/ASC's to which they are associated. The report shall be presented with points logically grouped by equipment, function and/or type.

Copyright © 2002 by ESS engineering, Inc.

4. **System Schedules Summary:** Summary of the schedule of operation of any equipment within a building EMCS associated with a scheduled start/stop control. Report shall include schedule for each day of the week plus holidays.

5. **Backup Report:** Report shall be generated as a result of performing an EMCS back up at the OW. The report will list the files backed-up, their sizes, and the time and date of the back up.

6. **Run Time Totalization Report:** Report of all building points that are used for equipment run-time totalization. Report shall include the point used, the equipment associated, the hours of run time, and start date and time of totalization. Any DO, DI or pseudo point shall be assignable to the Run Time Totalization Report. It shall be possible to re-initialize each point individually.

7. **Electrical/Gas Utility Report:** Report of electrical and gas energy consumption (kWh and MBtu) and peak (kW) for any utility monitoring point(s) included in the EMCS. It shall be possible to examine electrical and gas consumption and peak use history for each point separately and combined and to generate information on an hourly, daily, monthly and annual basis.

8. **System Parameter Change Report:** Report of all system parameter changes; e.g., setpoints, time schedules, overrides, reset schedules, etc. The report is accessible only by the highest password user and shall contain the time, date, operator, and item(s) changed since the last time and date the report was generated. Upon report printout, the operator shall be prompted to delete or save the previous report data. This report shall be accessible through any OW.

9. **Central Plant Cooling Energy Production Report:** Report of total (cumulative) cooling (ton-hrs) and peak cooling (tons) generated based upon monitored chilled water flow rates and the difference in chilled water supply and return temperatures for all monitored chilled water loops. Total cooling energy production data on an hourly, daily, weekly, monthly, and annual basis with the corresponding peak capacity shall be reported with time and date occurrence indicated. Peak history shall be based on a fifteen- (15) minute average.

10. The net auxiliary loads electrical consumption (kW) shall be based upon the measured power consumption of all operating cooling towers, condenser pumps and chilled water pumps. For constant speed equipment where no power measurement has been specified, power shall be based upon monitored status of the equipment and a "spot" measurement of power consumption (kW).

11. KW/Ton shall be based on a fifteen- (15) minute average. Power values that fluctuate or cycle (such as cooling towers and variable speed drives) shall be based on time-averaged values over each interval reported.

Copyright © 2002 by ESS engineering, Inc.

12. **Weather Report:** Report of the daily minimum, maximum, and average outdoor air temperature summarized per month. Report shall also include the number of heating and cooling degree days per month.

6.1.2 TREND LOGGING

A. The EMCS Contractor shall provide software, which permits the assignment of any real or pseudo (software calculated) point or group of points from any one or combination of EMCS points to a historical trend log. Trend data shall reside in the RPDs, until requested as indicated in Section 6.1.3.

B. All equipment added to the EMCS shall utilize the Log Object service, as defined in Addendum 135b of the BACnet standard, to collect trend data.

C. The minimum RPD resident trend log capacity shall be at least fifty (50) points with a data sampling interval from at least 1 to 1440 minutes. Recorded data shall be an average over the defined interval. The RPD shall store at least the last one hundred (100) samples for each point identified in that group.

D. Trend data shall be recorded with intervals based on the beginning of the hour. One minute data shall be recorded at the hour and on each minute thereafter, five minute data at the hour and 5, 10, 15, 20, etc. minutes after the hour, ten minute data at the hour and 10, 20, 30, etc. minutes after the hour, fifteen minute data at the hour and 15, 30, and 45 minutes after the hour, etc.

6.1.3 TREND DATA TRANSMISSION AND STORAGE

A. Trend data shall be sent from any RPD/interface to the OWs when the RPD reaches a changeable percentage of memory capacity, initially set at 80%, or an automatic download event is scheduled.

B. The RPD files, in receipt of request, shall automatically convert collected data into Comma Separated Variable (CSV) format or appropriate alternate, and upload data to the OWs. Proprietary Windows NT, or latest version of Windows compatible tools may be installed at the OWs to perform this task. Such tools shall automatically execute and convert the data to the format specified. Each file shall include a one-line header that includes point information. Each data string in the file shall be one line and include a time stamp and the data value.

C. Data collected from RPDs shall be stored in monthly files. Data being uploaded from any RPD shall append to a monthly file that exists for that point, or shall create a new monthly file if necessary. Additionally, should a problem occur during data transfer, an error message shall be reported and print at the OWs and the alarm printer indicating cause, and time of error.

Copyright © 2002 by ESS engineering, Inc.

6.1.4 REMOTE RPD AND ASC CONFIGURATION

A. If, due to a power failure or other occurrence, any or all controllers of a building EMCS lose their RAM-resident database or programming, the OW shall automatically retrieve each failed controller's database and programming from the OW data storage system and re-download this data to each controller affected.

6.1.5 TIME SYNCHRONIZATION

A. The real-time clocks in all control panels and workstations shall be using the BACnet Time Synchronization service. The primary Operator Workstation shall maintain the master clock. All other RPD and ASC clocks shall synchronize to this clock. At a minimum, time synchronization shall be automatically evaluated and updated daily.

6.2 DYNAMIC COLOR GRAPHICS

A. The EMCS Contractor shall provide one-line diagrams, I/O point summaries, floor plans indicating sensor locations, I/O point addresses, etc., of all systems controlled by the EMCS under the scope of work defined within the Supplemental Specification(s) to the OWN Contractor.

B. The EMCS Contractor shall coordinate with the OWN Contractor to ensure that accurate graphical representations are displayed at the OWs for the scope of work defined within the Supplemental Specification(s).

6.2.1 MONITOR SCREEN REQUIREMENTS

A. The EMCS and OWN Contractor shall coordinate to provide meaningful monitor screens that depict the actual field conditions as closely as possible. This requirement is intended to provide the OW operator with the information necessary to clearly determine the facilities current operation, sequence of operation and equipment status.

B. The EMCS Contractor shall provide the necessary Point-Identifier information for all points on the EMCS installation. This includes all hardware I/O and virtual (software) points to facilitate the development of monitor screens.

C. Each building shall be provided with one Building Equipment Monitor Screen from which transfer buttons shall provide access (including but not limited to) to the following information as appropriate:

1. Individual Air Handling Units:
   A transfer button shall be linked to the appropriate AHU HVAC graphic.

Copyright © 2002 by ESS engineering, Inc.

2. Central Plant Chilled Water System:
   A transfer button shall be linked to the appropriate Central Plant Chilled Water System graphic or building cooling system.

3. Central Plant Heating Water System:
   A transfer button shall be linked to the appropriate Central Plant Heating Water System graphic or building heating system.

4. Sequence of Operation:
   This shall be a MS Word document that is write protected and linked to the appropriate transfer button on the Building Equipment Monitor Screen. This transfer point shall provide access to all sequence of operation documentation associated with that particular building.

5. Equipment Status:
   This shall be a MS Word equipment status template linked to the appropriate transfer button on the Building Equipment Monitor Screen. This template shall be designed so that an OW operator can write notes about equipment status and a way to indicate when the equipment was placed back into service.

6.3 CUSTOM PROGRAMMING

A. Software shall be provided that permits an operator of highest access level to create, compile, edit, debug and execute custom programs that are controller resident. The capabilities of the custom programming language shall be as defined herein.

6.3.1 PROGRAMMING LANGUAGE

A. A trained operator shall be capable of generating custom software routines that directly utilize EMCS information and can implement EMCS control. The methodology used to generate these programs shall be based upon a structured source type modular programming language and/or the EMCS manufacturer's predefined modular (graphical) program development format.

6.3.2 MATHEMATICAL AND LOGICAL FUNCTIONS

A. The programming language shall provide an operator the ability to define custom operational sequences and control algorithms that utilize complex mathematical relationships and calculations involving real and pseudo points and/or parameters associated with the EMCS.

B. At a minimum, the programming language shall provide the following mathematical and logical capabilities:

   1. Logical operators:

Copyright © 2002 by ESS engineering, Inc.

a. and
b. or
c. greater than
d. less than
e. equal to

2. Mathematical operators:
   a. addition
   b. subtraction
   c. multiplication
   d. division

3. Mathematical functions:
   a. trigonometric functions
   b. square root
   c. exponential
   d. logarithmic

C. The ability for a custom program to read and utilize the current time, date, day of week, day of year, month of year and year shall be supported by the programming language.

6.4 EMCS PROGRAMMING

A. The EMCS Contractor shall be responsible for all programming and database development required to satisfy the requirements of the Specification. This includes implementation of all control sequences, scaling of analog sensors, entering of point descriptors, generation of dynamic color graphics, setting alarm limits and all other EMCS software related functions as specified. All said programming shall be performed by the same individual as appointed by the EMCS Contractor and approved by the City.

B. Reviews of control software development shall be conducted at scheduled progress meetings as required. The reviews shall involve the EMCS Contractor's primary programmer for the project, the City. The reviews shall serve to address any EMCS Contractor questions pertaining to control requirements and/or implementation as well as demonstrating the EMCS Contractor's software development status and understanding of all specified control requirements.

C. The EMCS Contractor shall perform all database work required to configure the EMCS and to display all I/O points in a meaningful and complete manner including English-language descriptors, appropriate engineering units and actual control function. Unless stated otherwise, all values shall be displayed in standard English-Engineering units as appropriate to EMCS/HVAC applications (e.g., ^{o}F, gpm, psi, % RH, etc.). In addition, all outputs controlling valves and/or dampers shall be configured to display their state as open, closed and/or their percentage open.

Copyright © 2002 by ESS engineering, Inc.

D. In addition to the programming work required to satisfy the Specification and develop the Application Programs defined, the EMCS Contractor shall provide up to forty (40) additional programming hours for implementing changes, modifications, and/or revisions in control methodology and/or associated graphics as may be directed by the City during EMCS installation without additional cost to the City. Hours unused by the City shall be credited against future programming work or changes as directed by the City.

E. The EMCS Contractor shall supply software, configuration tools, and coordination with the OWN Contractor to develop a system wide program interface. The EMCS Contractor's system programmer shall work with the OWN Contractor's system wide programmer to provide a seamless integration between the OW and Vendor specific RPD/ASC system-programming configuration. Additionally, the EMCS Contractor shall inform the OWN Contractor, as to the appropriate points (software and hardware) needed from their system, for the development of graphical displays.

6.5 DIRECT DIGITAL CONTROL

A. The EMCS installation shall provide for Direct Digital Control (DDC) as defined by this Specification and Supplemental Specification(s). Each controller shall be provided the hardware and software required to implement full DDC control based on any appropriate points associated with that controller. At a minimum, DDC control capabilities shall be provided as specified in the following sections.

6.5.1 CONTROL LOOPS

A. Software that permits the development of customized DDC control shall be provided. These control loops shall be definable to perform at least the following control modes:

1. Binary control (2 Position Control)
2. Proportional Control (P)
3. Proportional Integrated Control (PI)
4. Proportional Integrated Derivative Control (PID)

B. The provided software shall permit the interlocking of control loops, the defining of control loops based on both physical and software points, and the defining of control loops based on both inputs and outputs related to multiple controllers. Loop definition capabilities shall include:

1. Selecting the control mode desired.

Copyright © 2002 by ESS engineering, Inc.

2. Defining setpoint (constant, scheduled, and/or calculated).

3. Defining input low and high limits.

4. Defining output low and high limits.

5. Defining the control loop interval.

6. Defining P, I and D gain terms independently.

7. Defining loop as forward or reversing action.

C. The input and output points(s) associated with each DDC control loop shall be installed and configured such that the points are part of the direct (physical) I/O environment of the controller executing the DDC control loop.

6.5.2 FUNCTIONS

A. The following DDC functions shall be provided which can be incorporated in DDC control algorithms resident in each controller:

1. Normally open, time delay ON.

2. Normally open, time delay OFF.

3. Normally closed, time delay ON.

4. Normally closed, time delay OFF.

6.5.3 PID CONTROL LOOP TUNING

A. Software shall be provided by which an operator at an OW can graphically examine the time response of a PID control loop. The operator shall be able to observe and/or change control loop response to both system and setpoint changes in a graphical format. The minimum time increment between observations shall be at most fifteen (15) seconds.

6.5.4 AUTOMATED PID CONTROL TUNING

A. An automated tuning algorithm shall be provided for assisting an operator in tuning of P, PI and PID control loops. The algorithm shall monitor loop response and characteristics in accordance with the changes imposed by the system and its environment. The algorithm shall determine and report the optimum PID control loop parameters. The algorithm shall be RPD, MTS, or OW resident.

Copyright © 2002 by ESS engineering, Inc.

6.6 EMCS FAILURE MODES

A. In the event of an EMCS failure at the controller level, all equipment controlled through the failed controller shall maintain operation, halt operation or resume local control as defined herein or as indicated on the Input/Output Point Summaries. An EMCS failure at the controller level shall consist of a power failure, I/O signal loss or loss of programmed configuration/database. In addition, an EMCS alarm shall be issued upon any controller failure.

B. In the event of an EMCS failure at the input point level, all equipment control dependent on the failed input shall maintain operation, halt operation or return to local control as indicated on the Input/Output Point Summaries, located in the Supplemental Specification(s). In addition, an EMCS alarm shall be issued upon any I/O point failure.

C. After restoration of a controller configuration/database or re-powering subsequent to a controller failure or general building power outage, all equipment controlled through that controller shall be returned to its programmed state in a time-delayed and staged sequence.

6.6.1 LAST COMMAND (C)

A. A Last Command failure mode shall correspond to any equipment, system or analog output point (and/or its associated transducer) maintaining operation or output at its last EMCS commanded state of operation prior to controller failure. Upon return from failure of the controller, all equipment, system and analog output points shall continue to operate at their last commanded state of operation without interruption until such time that the controller commands a new state of operation or output.

6.6.2 HIGH VALUE (H) AND LOW VALUE (L)

A. High Value and Low Value failure modes correspond to the state an EMCS analog output and/or associated transducer shall maintain in the event of a controller failure. High Value shall correspond to the highest electrical (voltage or amperage) or pneumatic output provided by the AO and/or its associated transducer as provided within its normal operating range. Low Value shall correspond to the lowest electrical (voltage or amperage) or pneumatic output provided by the AO and/or its associated transducer as provided within its normal operating range.

6.6.3 ON/OPEN (O) AND OFF/CLOSED (F)

A. On/Open and Off/Closed failure modes correspond to the state any equipment, system or digital output point (and/or its associated device) shall maintain in the event of a controller failure. On/Open shall correspond to the continuous operation of the equipment or system controlled via the controller. In the case of a valve or solenoid, On/Open shall correspond to the open position of the valve or solenoid.

Copyright © 2002 by ESS engineering, Inc.

B. Off/Closed shall correspond to the deactivation or shutdown of the equipment or system controlled via the controller. In the case of a valve or solenoid, Off/Closed shall correspond to the closed position of the valve or solenoid.

C. In the case of a DO used to make or break a control loop or other electrical signal, On/Open shall correspond to a failure mode involving the completion of the loop or circuit. Off/Closed shall correspond to a failure mode involving the disruption or opening of the control loop or circuit.

6.6.4 LOCAL LOOP (N)

A. A Local Loop failure mode shall correspond to any equipment, system or control loop-maintaining operation via an existing local control loop. Examples would include the enabling of a local pneumatic control loop or local thermostat control in the event of disruption of DDC capabilities due to a controller failure.

6.7 EMCS ALARM STATES

A. The EMCS Contractor shall coordinate with the OWN Contractor to configure and program the EMCS to recognize and report alarm conditions as specified by the City. All conditions specified shall be reported at the OW locations, with a unique, operator definable message, an audible alarm with volume control, and description unless otherwise acknowledged or overridden by an EMCS operator. The EMCS Contractor shall provide the alarming capabilities as described herein.

6.7.1 SAFETY ALARM

A. Any EMCS alarm condition shall be assignable as a safety alarm. A safety alarm shall assume the highest priority for annunciation.

6.7.2 EQUIPMENT ALARM

A. All equipment controlled through the EMCS, which includes a digital equipment status indication to the EMCS, shall be configured with a digital equipment alarm. An alarm occurrence shall correspond to an equipment status indication that contradicts an EMCS commanded ON, OFF, or AUTO state. A time delay shall be definable for each alarm point to allow for start-up and shutdown delays associated with controlled equipment.

B. In addition, fans and pumps that include an analog amperage or kilowatt input point shall be configured with a software generated digital input status/proof point. The software status point shall change based upon an operator adjustable amperage value of the equipment's analog input

Copyright © 2002 by ESS engineering, Inc.

point. The software status point shall be utilized by the EMCS as a digital equipment status indication and shall be configured as part of a digital equipment alarm.

6.7.3 CHANGE-OF-STATE

A. A change-of-state alarm shall correspond to a digital input monitoring point sensing a value from one (open or closed) to zero (open or closed), or from zero to one. Upon each change, an alarm shall be posted; i.e., fire alarm and back to normal. The digital input shall be capable of either normal open or closed termination to an RPD or ASC.

B. An operator definable time delay shall be associated with each alarm condition. The alarm condition must exceed the alarm setpoint for a pre-defined period before an alarm is annunciated. This requirement is to prevent momentary or transient conditions from creating false alarms.

6.7.4 HIGH AND LOW LIMIT ALARM

A. All EMCS monitored states or equipment based upon an analog input shall be configured with both a high and low limit value. An alarm occurrence shall correspond to anytime the value of the monitored analog input state is greater than or less than its associated limits.

B. Each analog alarm shall be defined such that its high and low limits are either scheduled by time of day and day of week or that the alarm is linked to a scheduled real or pseudo point. In so doing, nuisance analog alarms shall be prevented from being generated during times when the equipment with which the analog input is directly or indirectly associated is non-operational.

C. Each deadband alarm limit setpoint shall be definable by both an “in-to” and an “out-of” alarm value (i.e. a pair of setpoints per deadband limit) to prevent repeated generation of alarms when an analog input value is varying closely about the deadband setpoint. Use of an alarm setpoint and defined “change-of-state” threshold for returning back “out-of” alarm (at both the high and low limit) shall also be acceptable.

D. An operator definable time delay shall be associated with each alarm condition. The alarm condition must exceed the alarm setpoint for a pre-defined period before an alarm is annunciated. This requirement is to prevent momentary or transient conditions from creating false alarms.

E. High or low limit alarms shall also apply for digital input points where specified. Field digital input devices associated with a digital high or low limit alarm shall be capable of field calibration to provide an alarm indication of a monitored signal that is greater than or less than the field calibrated setpoint.

Copyright © 2002 by ESS engineering, Inc.

6.7.5 RUN TIME ALARM

A. Any real or pseudo digital input or output point associated with the EMCS shall be capable of run time totalization. The point shall be definable such that a start time and interval over which the EMCS shall track the total hours of the point is either closed or open. Any point defined for a run time alarm shall correspond to the accumulated run time total exceeding a definable limit.

Copyright © 2002 by ESS engineering, Inc.

Energy Management and Control System (EMCS) supplemental specification 5/8/06

- EMCS technical guideline dated 1/10/02 is provided herein as an attachment.

- Acceptable vendors are Alerton, Johnson Controls, and Delta. No other vendors shall be approved.

- EMCS specification shall consist of two parts- Part one, EMCS Technical Guideline (Provided herein by the City of Tucson); and Part two, EMCS supplemental specifications (Provided by the consultant team) as shown and discussed in section 1.0 Introduction pages 1-4 of the attached EMCS technical guideline.

- Please note Table 1- Critical Overview Items, second item. The City will negotiate the integration fees (mapping) directly with our integration vendor outside of this contract. This is a cost that will be incurred by the project, but will not be included in the bid submitted by the control vendors for the scope of work for the building.

- The supplemental guide specification prepared by the consultant team shall include, but is not limited to, specifications for hardware items not included in the EMCS technical guideline, quantities of workstations, points lists and schematics, special access issues, control sequences of operation, specific training requirements, and additional warranty services.

- All field devices that make up a building's EMCS will communicate BACnet standard MSTP lower level controller protocol unless a written request is prior approved by Facilities Management's EMCS Section.

- The City of Tucson shall be provided with full ownership of all necessary software and hardware, license agreements, software and/or product keys, access codes or devices, etc such that the City of Tucson is fully able to integrate the locally installed EMCS system into the City of Tucson's central system. The City of Tucson shall have full rights and access to own, modify, maintain, reprogram, modify port numbers and IP addresses etc and make any changes to the system it sees fit at any time.

TABLE OF CONTENTS

I. SECTION 260000 GENERAL ELECTRICAL

II. SECTION 260010 RACEWAY

III. SECTION 260040 WIRE AND CABLE

IV. SECTION 260100 BOXES

V. SECTION 260200 CABINETS AND ENCLOSURES

VI. SECTION 260300 WIRING DEVICES

VII. SECTION 260400 ELECTRICAL IDENTIFICATION

VIII. SECTION 260500 PANELBOARDS

IX. SECTION 260600 OVER CURRENT PROTECTIVE DEVICES

X. SECTION 260800 LIGHTING

XI. SECTION 261000 TRANSFORMERS

XII. SECTION 262000 EQUIPMENT

XIII. SECTION 262200 GROUNDING

XIV. SECTION 263000 ONE-LINE DIAGRAM

XV. SECTION 264000 FIRE ALARM SYSTEMS

XVI. SECTION 265000 INDIVIDUAL FACILITIES

XVII. SECTION 26800 ARC FLASH STUDY

I. SECTION 260000 GENERAL ELECTRICAL

Any portion of this Standard that, in the opinion of the Design Engineer, is too costly for the overall budget of the Project may be brought to the attention of the Project Manager and discussed regarding feasibility for the Project. This does not include any Code or OSHA or any other rule, law or ordinance requirements.

Design the Electrical systems for compliance with local, State and National Codes, laws, regulations, standards etc. Require the Contractor to install the Electrical systems to these same codes, laws, regulations, standards etc. Refer to the Development Services web site for a complete listing of Codes, laws, etc. used for review bases.

Systems drawn on floor plans shall have room designations and numbers on the electrical drawings themselves, so that it is clear which room is being provided with power, lighting, communications, etc.

Electrical site plans shall show outside connections to utility or other service suppliers, such as power, telephone and other communications, fire alarm, security and other special systems. Show locations of points of connection to the service provider, such as distribution transformers, utility manholes, etc.

The fire alarm system is the responsibility of the electrical consultant. Show all device and panel locations.

On projects without an Energy Management and Control System (EMCS), the Electrical Consultant shall design power and controls conduit and wiring among the electrically operated thermostats, control equipment and mechanical equipment.

On projects with an EMCS, the Mechanical Consultant shall design the location of the EMCS Controller, the Global Controller and controls conduit and wiring.

On projects with an EMCS, the Electrical Consultant shall design all required power for the EMCS Controls, power supplies and the like.

On Fuel Management Systems Projects or projects that include a Fuel Management System, the Electrical Consultant shall design all power and controls conduit and wiring.

In every case, especially as technology permits, consider techniques other than isolated neutral systems to reduce neutral harmonic currents and introduction of harmonic currents into the electrical system.

Evaluate circuits for total harmonic distortion (THD) if they are known to be supplying equipment such as fax machines, printers, computers, copiers, electronic ballasts, etc. Design for a maximum of six (6) receptacles on one 20-Amp circuit known to be feeding these types of loads. No more than one (1) printer per "PC" computer on circuits with more than one receptacle. For circuits feeding only computers, design with 200% neutrals and isolated grounds or other solutions to handle harmonic currents.

Each branch circuit for power of computer systems shall have a dedicated neutral.

In new facility or major remodel building projects, design 20 Amp, 120-Volt branch circuits with isolated grounds, or other solutions to handle harmonic currents, for circuits that are known that they will power computers or other harmonic producing loads. This includes lighting ballasts and electronic motor drives, like VFD's. Require and design for the necessary transformers, panel-boards and other equipment to be included to provide a true isolated ground system, if used. Other techniques of harmonic reduction will be considered.

In smaller remodel projects, consult with the City Electrical Engineer, A&E Division of the General Services Department, on the use of isolated ground circuits. In general, for "substantial remodels," utilize isolated ground systems, or other solutions to handle harmonic currents, as directed above.

When designing modifications of existing facilities, design, material and workmanship should be consistent with the quality established in the existing facility, however, in no case should the new installation's design, material or workmanship be of less quality than that established in these Standards.

For sites with multiple facilities, use one master utility meter and sub-metering as directed. For new buildings added to multiple facilities, use sub-metering to provide individual metering for the new facility, as directed. Design for new metering to have provisions for communication to EMCS.

New buildings with lighting in high ceilings and/or with low and/or narrow doors (i.e.: racquet ball courts or gymnasiums): include, in the cost of the building, proper lift equipment for maintenance of such fixtures.

Require that the Electrical contractor shall wire equipment including low voltage (<120 V) systems unless there is a specialized HVAC or special systems contractor.

Verify that there is sufficient space to install and work on electrical panels and other equipment.

Roof top electrical equipment shall be attached to the roof using the roofing manufacturer's approved means and methods. The equipment shall be attached using a roofing contractor approved by the roofing manufacturer to preserve the roof warranty to the City.

Verify that electrical panels are not recessed in firewalls.

Verify location of all panel boards and that they are indicated on the one-line diagram and plans.

All circuit breakers shall be labeled. Labels are required on individually enclosed circuit breakers and in panel boards. Circuit breakers in panel boards shall be labeled by completing the panel board schedule card, typed and inserted into the card holder.

Show number, size, and type of all line voltage, grounding, and bonding conductors to be installed. "Global" notations may be used such as, "All conduit is ¾" EMT; All wire is #12 THHN/THWN solid except as noted."

Provide details of panel boards, switchboards, motor control centers and distribution centers showing type and arrangement of switches, over current devices, and control equipment.

Provide fault current calculations for service entrance line side connection to utility or other low voltage source. Provide fault current calculation results for all points of interest downstream of service entrance line side connection, on all busses, feeders, branch circuits, transformer connections, etc. to a point where the available fault current falls below 9,000 amps.

Provide Arc Flash Hazard Study Calculations. See "ARC FLASH HAZARD STUDY" section.

Provide feeders for motors that have sufficient capacity for starting and running. Carefully consider length of feeder in sizing conductors.

In remodels, show adequacy for proposed installation and provide 20% growth capacity for future.

Provide lightning protection. Require that shop submittals include submittals for all material and equipment to be utilized. Require shop drawing submittal of a complete plan layout and installation drawing of all material and equipment to be installed. All submittals shall be by an LPI certified Lightning Protection Contractor, which shall be the contractor installing the lightning protection system.

In all remodels, replace all light fixtures, wiring devices and wire within the remodel space. Replace all home runs back to the source. Do not allow reuse of old devices or removed wire.

II. SECTION 260010 RACEWAY

Require underground conduit elbows (sweeps) to be rigid steel, double layer wrapped, ½ lapped, with 10 mil. PVC tape or PVC coated steel. All underground conduit installations shall utilize rigid steel PVC tape wrapped or PVC coated sweeps regardless of deflection angle.

Require underground conduit be installed with a warning tape 12" below grade. Specify the warning tape be of four mil plastic formulated for prolonged use underground, and resistant to destructive agents found in the soil. Require the tape have a continuous message in permanent ink formulated for prolonged underground use and bear the words, "CAUTION--ELECTRIC LINE BURIED BELOW" in black letters on a red background.

Require Electrical Metallic Tubing (EMT) couplings and connectors be of steel, compression type. Do not allow the use of set screw or indent type.

Require Intermediate and Rigid conduit couplings and connectors be threaded. Do not allow running thread.

All conduit shall be minimum ¾" except controls and light fixture whips. Controls and light fixture whips may be ½".

Use of "MC" type cable is prohibited.

Require panel-boards have a minimum of (1) 3/4" spare conduit stubbed out to a readily accessible location for each equivalent 3-pole spare or space. Require each panelboard 200 Amp or larger shall have at least one 1-1/4" spare conduit stubbed out to a readily accessible location.

Require the use of hubs and box connectors at conduit-to-enclosure connections.

In new construction, require sleeves in floor slabs to extend a minimum of one inch above the finished floor.

Require "Wiremold" and equivalent wireways be supplied as a complete system using accessories and fittings such as elbows, end plates, tees, etc. of the same manufacturer. Require the installation to be according to the manufacturer's published instructions. Require a rigid mechanical and electrical connection between parts and the support structure. Removable wireway covers shall be accessible.

Require all underground power feeder circuits above 50 volts be encased with concrete with red dye sprinkled on the top. Minimum 28 day test shall be 2500 psi. Unless required for structural reasons, reinforcing is not required.

III. SECTION 260040 WIRE AND CABLE

Design for all wire and cable to be installed in a continuous raceway listed for the intended use. Cable tray is acceptable for communication cable. The City Electrical Engineer, A&E Division of the Department of General Services, will make the decision regarding the use of cable tray for other wiring systems.

Require lighting and power branch circuit conductors to be a minimum of #12 AWG copper conductor with 98% conductivity. Stranded conductors may be used for No. 8 AWG and larger. Require solid conductors for smaller than No. 8 AWG. Stranded conductors in wire sizes smaller than No. 8 shall be used where subject to vibration or frequent flexing, and shall be used for control systems wiring.

Require all power and lighting using voltages above 50 volts to follow the color code system below:

	Voltages		
	208Y/120	480Y/277	240/120
Phase A	Black	Brown	Black
Phase B	Red	Orange	Red
Phase C	Blue	Yellow	- - -
Neutral	White	Gray	White
Ground	Green	Green w/Yellow Stripe	Green w/Yellow Stripe
Isolated Ground	Green w/Yellow Stripe	Green w/Yellow Stripe	Green w/Yellow Stripe

Require continuity and insulation testing on all feeder and branch circuit conductors. Insulation testing shall be performed with a 500 VDC megger. Phase and neutral conductors shall test free of short-circuits and grounds. For continuity testing, motor feeders shall be measured with motors connected and local disconnect closed and fused if a fusible disconnect. Readings shall be taken one phase-to-ground for each phase. Test all other conductors phase-to-phase and phase-to-ground.

Require testing of proper phase rotation for three phase systems. Require individual tests at the service entrance, motor control centers and any other circuits that feed equipment that may be adversely affected by incorrect phase rotation, especially rotating machines.

Require that the contractor furnish the instruments, materials, and labor for all tests at no additional cost to the owner (i.e., must be part of the bid price). Require the contractor present to the Owner three copies of certified test reports. In addition to the various electrical measurement results, the test reports shall, at a minimum, include:

1. The official City of Tucson A&E project name,
2. The project address,
3. The City of Tucson building number,
4. The City of Tucson A/E Division project number,
5. Name of the test,
6. Name of equipment tested,
7. Location in the building of the equipment tested,
8. Name of the Project General Contractor,
9. Name of the Contractor performing the test,
10. Name of the Contractor's employee performing the test,
11. Date, time, and temperature.

The City Electrical Engineer desires that the Contractor use pre-printed industry forms, if available, for recording and reporting electrical tests, but this is not a requirement. The City Electrical Engineer expects the test results to be reported in a reasonable, easily read format and expects the use of good common English, accurate spelling and good penmanship in the reports. The City Electrical Engineer reserves the right to reject test reports that are difficult to interpret. This does not exclude using narratives to explain test reports, methods and unusual field circumstances that may contribute to difficult testing situations. Include this intent in the specifications for testing.

IV. SECTION 260100 BOXES

Require that multiple-gang boxes be used where more than one device is mounted in a common enclosure; do not permit the use of sectional boxes. Require barriers to separate wiring if different voltage systems are present in the same box.

Support ceiling outlet boxes from ceiling structure. Support boxes in suspended ceiling systems from main runner channels, or joists, or other structural members. For boxes in suspended ceilings, supplement outlet box support with separate support to the structure as required for the expected load of the device, such as a ceiling fan.

Avoid mixing feeder and branch circuit conductors in a common pull or junction box.

Use composite material junction and pull boxes in exterior underground conduit systems unless otherwise directed by the City Electrical Engineer. Equip boxes with traffic rated covers. Carefully consider the largest expected vehicle loading in specifying box and top structural requirements.

Do not use single covers for junction and pull boxes having cover length or width dimension exceeding three feet (3') unless pre-approved. Sectionalize covers exceeding three feet in either dimension into two or more sections.

V. SECTION 260200 CABINETS AND ENCLOSURES

Require cabinets and enclosures to have blank ends and sides, no knockouts. The contractor is to punch out openings required. Require unused openings be plugged with manufactured plugs.

Require cabinets and enclosures have a protective pocket inside the front cover with schematic diagram, connection diagram, and/or as applicable layout drawings of wiring and components within enclosures or boxes that contain electrical equipment, terminal strips and the like.

Require hinged covers for cabinets and enclosures that contain equipment like relays, terminal boards or terminal strips.

VI. SECTION 260300 WIRING DEVICES

Require wiring devices to be commercial, specification grade.

Require 125 Volt 20 Amp receptacles on 20 Amp branch circuits, do not allow 15 Amp. Require the receptacles to be installed in the vertical position with the ground up or in the horizontal position with the neutral up. Use only three terminal grounding receptacles.

Require wall switches (toggle switches, light switches) to be grounding type. For single throw switches, require installation with "ON" in the "up" position.

Require wall switch and receptacle body color to be ivory unless directed otherwise by the A&E Project Manager.

Require wiring device cover plates to be satin finish stainless steel unless directed otherwise by the A&E Project Manager.

Design the installation of wall switches to the right side of double doors, as one enters a room, and the latch side of single doors.

VII. SECTION 260400 ELECTRICAL IDENTIFICATION

Require wire markers on conductors at the panelboard and at each load connection. Identify with panelboard or other source name and branch circuit or feeder number at the load and with load name at the source for power and lighting circuits, and with control wire number as indicated on schematic and interconnection diagrams. For receptacle and lighting circuits, require the marker at each outlet.

Require all control and alarm wiring be identified by using numbered wire markers. Each wire shall be uniquely identified within the control system of which it is a part and uniquely identified from other control or alarm systems in the facility. Markers shall be self-adhering, wrapped around the conductor twice, and sleeved with clear heat shrink sleeves installed over the marker.

Require all junction boxes containing conductors of one circuit only be clearly and neatly labeled with indelible black ink, indicating panelboard, bus way, enclosure, switchboard, or other source terminal point, including circuit number as applicable. For junction boxes containing multiple circuits, require conductors be tagged as in #1 above.

Require all motors be identified with a permanently attached durable tag with motor designation and function. As much as possible, use the equipment names as described in #6 below.

Provide a logical naming system for panel-boards, safety switches, disconnects, transformers, motor control centers, enclosed circuit breakers, and so on. Require nameplates for each piece of equipment. If the electrical equipment is directly associated with a piece of mechanical or other utilization equipment, use the utilization equipment name as part of the electrical equipment name, preceded by the building number. In all cases, the equipment name shall begin with the building/facility number.

Require two color, engraved, **micarta** name plates for each separate electrical equipment item (switchboards, panel-boards, disconnect switches, motor starters, transformers, transfer switches, bypass switches, generators, etc.). The name plate is to have the information described below engraved through the top layer of the plate so that the lower layer that is exposed creates the letters, numbers and symbols of the information required.

As part of the Electrical Drawings, include a sheet or sheets showing each individual nameplate to be made and affixed to the equipment enclosures. Require each nameplate to be affixed by “pop” rivets. Affixing with glue or screws is not acceptable. Each nameplate is to include the following information in the format presented.

Enclosures that do not offer adequate front surface area for all information to be included in this format on one nameplate may use nameplates of a modified format (IE: Smaller letter size or other

agreed upon modifications) or more than one, single nameplate, but each enclosure shall have nameplates affixed showing all the required information.

As a minimum, each nameplate shall include ALL of the following information and information titles as shown below with consideration of the immediately preceding paragraph. If information required for a title is not applicable, then use "N/A."

EQUIPMENT NAME	
FED FROM:	SOURCE EQUIPMENT NAME (a)
CIRCUIT #:	SOURCE CIRCUIT OR BUCKET DESIGNATION (b)
THROUGH:	INTERVENING EQUIPMENT NAME(c)
VOLTAGE, # OF PHASES, # OF WIRES:	(d)
FEEDS:	DESTINATION EQUIPMENT NAME (e)
VOLTAGE, # OF PHASES, # OF WIRES:	(f)
OVER-CURRENT PROTECTION:	(g)
(h)	(h)
(h)	(h)

The A&E approved name where the circuit originates, usually at an over current protective device. This usually will be a panelboard, motor control center, etc. Use the transformer name if a transformer is between the source over current protective device and the equipment being labeled. This would be especially true if the transformer has an over current protective device on the secondary side. The decision of which "source name" to use is left to the Engineer. The convention used throughout the project must be consistent, however. The convention chosen should be consistent with nearby City facilities and should be the same or similar to the convention used in an existing facility in remodel projects where the entire facility electrical system is not replaced.

The circuit number in the source enclosure that identifies the position the circuit connection occupies. This would typically be a fuse, circuit breaker or bucket location, or similar.

If the circuit passes, for instance, through a transformer between the source panelboard and the equipment being labeled, the transformer's name would go here. This could also be major junction boxes, gutters, wire ways, etc. that have unique names assigned.

The voltage, AC or DC, number of phases and number of wires of the feeder from the source to the utilization equipment, **at the** equipment **terminals ("input")**. Standard accepted abbreviations, symbols and nomenclature may be used if they are easily and generally available on engraved nameplates. A 480 volt, 60 Hz, AC, three phase, four wire wye feeder could be shown as: 480V AC, 3∅, 4W; or 480V AC, 3Ph, Y, or 480/277V AC Y, etc. Use easily understood nomenclature and symbols. Be consistent throughout the project documents. Do not mix nomenclature among drawings and specifications.

The name of the "load" on the circuit leaving the equipment. If multi-circuit equipment, like a panelboard or motor control center, use "N/A." In the spirit of (a), it is left to the Engineer to decide if a transformer is a "load" or if the utilization equipment name should go here.

The voltage, AC or DC, number of phases and number of wires of the feeder leaving the equipment being labeled, **at the equipment terminals ("output")**. Standard accepted abbreviations, symbols and nomenclature may be used if they are easily and generally available on engraved nameplates. See (d), above. Use easily understood nomenclature and symbols.

If there are over current protective devices **in the enclosure being labeled**, specify the basic information regarding the over current protective device here. For circuit breakers, at a minimum show circuit breaker frame size, trip setting or rating, maximum voltage rating and maximum interrupting rating. For fuses, at a minimum show current rating, class, maximum voltage rating and maximum interrupting rating.

Reserved for possible future additional information. If not used, the rows may be eliminated from the nameplate to reduce size.

Require the name plate be yellow, engraved with minimum $^{3}/_{16}$" in height, black lettering, with the equipment name being minimum ¼" in height

Require J-boxes for Fire Alarm Systems be painted red. Require that each J-box for any other special system be marked, for example, Clock, Intercom, CATV, Security, etc.

VIII. SECTION 260500 PANELBOARDS

Provide minimum 20% spare circuit breaker or fused switch positions (i.e. spaces) that are complete in all respects, completely bussed and ready for future installation of the fused switch or breaker of maximum rating and frame size used in the panelboard.

Require fully rated copper bussed panel-boards. Series rated and/or aluminum bussed panel-boards are not acceptable.

Require bolt-in circuit breakers. Plug-in circuit breakers are not acceptable in panel-boards.

Require panel-boards to have hinged covers.

Require all locks on panel-boards on one project to be keyed alike.

Require measurement of the phase currents at each panel with the panel at expected maximum demand. Require balancing of the phase currents at each panel to within

+/- 5% of the calculated average bus current, or as close as possible. Require written record of the balanced bus current values.

Use panel-boards with isolated ground bus where significant numbers of switching power supplies are used in computers or other equipment

IX. SECTION 260600 OVER CURRENT PROTECTIVE DEVICES

Require all circuit breakers in the same system to be of the same manufacturer. Require all fuses in the same system to be of the same manufacturer.

Require power fuses be equipped with a blown-fuse indicator that provides visible evidence of fuse operation while installed in the fuse mounting.

Require circuit breakers have non-welding, non-corroding contacts, automatic tripping clearly indicated by the handle position, a minimum 10,000 RMS AIC rating trip current.

Require two and three pole breakers be common trip, and shall not require more space than the equivalent number of single-pole breakers. Handle ties are not acceptable.

X. SECTION 260800 LIGHTING

When designing modifications of existing facilities, evaluate the existing lighting for the opportunity to include energy-efficient upgrades in the design during the Schematic Phase, or the equivalent for the project, even if not included in the original Scope of Work. The City will make the decision to include the lighting upgrade or fund the upgrade in another project. This should be part of the proposal for design services as a separate line item(s).

Interior lighting shall be in compliance with the current adopted edition of the Tucson Sustainable Energy Code for new construction. Exterior lighting shall be in compliance with the current adopted edition of the Tucson/Pima County Outdoor Lighting Code.

Require interior lighting fixtures be supported from the building structure, not from drop ceilings, ductwork, or cable trays. For “drop-in” fixtures for suspended ceilings, the minimum support shall be to structure on at least two opposite corners.

Avoid the use of incandescent lights. Use compact fluorescent as downlights and floodlights.

Utilize fluorescent fixtures as much as practicable, T8 or T5 bulbs with electronic ballasts for 2' X 2' and 2' X 4' fixtures; 3500°K for most applications, 5000°K in color-sensitive areas such as blueprint/drafting rooms; 85 CRI, average life 20,000 hours; 24,000 hours for areas where routine maintenance would warrant. Do not use 8' lamps. Do not use U-shaped lamps. Reflector technology shall be used in order to reduce the quantity of lamps required per fixture. Utilize low mercury lamps, preferably Alto technology.

Specify electronic ballasts, sound rating "A", 20% THD, and 95% power factor; instant start for most applications, rapid start where frequent switching would warrant. Verify that system components can sustain inrush current.

Generally, use acrylic lenses with 0.125" minimum thickness.

For areas requiring shielding, such as computer rooms and certain office areas, consider deep-cell parabolic louvers. Do not use "egg crate" lenses.

For compact fluorescent, use instant-start ballasts, and bulbs with a minimum life of 10,000 hours.

In all new and major remodel projects, install Emergency Egress "frog-eye" lights in all occupied areas, including toilet rooms. Exit signs shall have Emergency Egress "frog-eye" lighting as an integral part of the Exit sign fixture. Exit and Emergency Egress lights shall have a minimum of 1-1/2 hour battery packs and conform to applicable Codes. Exit signs shall be LED type with 6" red lettering on white background and 25 year minimum warranty based on continuous operation. If there is a question if a remodel project requires this lighting, the Project Manager will advise the Consultant on the correct course of action. In all cases where Exit signage is installed and/or replaced, specify Exit signs with Emergency Egress lighting as an integral part of the Exit sign fixture. For Emergency Egress "frog-eye" units without Exit signs, specify Lithonia fixture "6ELM2" Series, or equivalent, in dry locations and "ELM2" Series, or equivalent, in damp or wet locations. For Exit signs with Emergency Egress lighting integral with the fixture, specify Lithonia fixture "LHQM" Series, or equivalent, for dry locations and "LV" Series, or equivalent, for wet locations.

Specify that luminaires of the same configuration (Lay-in troffers, down light cans, outdoor floods, etc.) and luminaires represented by multiple luminaire type designations, but intended to match each other, shall be the product of the same manufacturer.

Any new retrofit/assembly or "kit" shall be UL listed as such.

Use occupancy sensors for common areas and single office spaces. Electronically timed switches are permissible in closets and equipment rooms.

For 2x4 fixtures, include life cycle cost analysis in the selection process among 2, 3 and 4 lamp fixtures.

The maximum lighting power density (LPD) for any building may be calculated by either the Complete Building Method or the Area Category Method.

Motion and light sensors for all spaces including conference and rest rooms.

Outdoor lighting shall be evaluated for stand-alone photovoltaic systems.

Lighting design shall comply with current IESNA guidelines and application notes.

LPD shall, in no case, exceed the values in the Complete Building Method Table.

In all areas, lighting targets shall be achieved by the most energy efficient technology reasonably available.

For outdoor lighting, use HID sources, Metal Halide, with energy efficient ballasts. Consider use of LED sources. Evaluate the use of LED versus HID using Life Cycle Cost analysis method.

For area or street lighting on poles/standards, require a pull box minimum 21”L x 9”W x 7”D, with bolt-down lid. Require traffic rated lid in all traffic areas including landscaped areas. Use pull box as a splice box to tap main line feeder circuit to light fixture.

XI. SECTION 261000 TRANSFORMERS

Do not locate transformers in attic or ceiling space. Mount on minimum concrete housekeeping pad of 4” thickness and 2” larger in length and width than maximum physical transformer size. Mount transformer centered on pad.

Locate all transformers in spaces without conditioned air. At the most, locate the transformers in spaces cooled by evaporative coolers, but carefully consider ventilation requirements when the cooling from evaporative cooling is minimal, such as during Monsoon season.

Require transformers with copper windings only. Do not allow aluminum windings.

Where the number of computers is expected to be significant (Like an office space with “a computer on every desk”), carefully consider the use of K-Rated transformers and isolated ground panel boards and branch circuits (See also “Panel-boards” section). Consider costs when deciding to use the isolated ground system to supply only computer loads or to also supply general receptacles from this system.

Design for the transformer to have adequate cooling space on all sides. Design to comply with NEC and other applicable instructions or guidelines for transformer cooling. Consult with the Mechanical Engineer to determine if cooling air must be directed into the Electrical Closet to provide adequate cooling for the electrical equipment.

Use dry-type transformers when changing voltage from 480-volt systems to 240 or 208-volt systems, or similar transformations in systems operating at less than 600 volts.

Require the Contractor to measure and adjust as required the secondary voltage at the secondary terminals of each transformer supplied by the project. Require adjustment to within +/-2% of the nominal system voltage using the transformer taps. Require the measurements be made under expected maximum demand conditions or as close to expected maximum demand as possible. At maximum demand, use the tap setting that achieves the closest voltage to nominal, but less than nominal to restrict high voltages when transformer loading is lower than expected maximum.

XII. SECTION 262000 EQUIPMENT

Provide disconnecting means for motors, including FHP exhaust fans. FHP fans that are 120V may use plug and cord connectors.

For motors larger than for FHP Exhaust Fans, use commercial disconnect switches, heavy duty. General duty are not acceptable.

Coordinate with Mechanical Engineer to ensure proper motor starters are supplied for motorized equipment. If Mechanical equipment contains starters, do not include additional starters in the Electrical design.

Show each motor on the one-line diagram along with all feeder or branch circuit operable equipment back to source (e.g., Beginning at source, show over current protective device, starter, feeder wire and conduit noted as to size, disconnecting means, and motor with correct equipment name and motor HP.). This is not intended to require showing fractional HP toilet fans.

XIII. SECTION 262200 GROUNDING

Install a green Equipment Grounding Conductor in each conduit.

Provide isolated ground systems in new buildings with significant numbers of switched power supplies. See also other sections regarding use of isolated ground systems.

XIV. SECTION 263000 ONE-LINE DIAGRAM

On the One-line diagram, provide all transformer ratings, voltage and horsepower or FLA rating of each motor, rating of each generator, rating, type, and location of each motor disconnecting device.

Show wiring for all motors and provide each motor with a disconnecting means.

Except for very minor re-models, show the complete electrical system back to the utility connection, including the utility transformer or City owned transformer operating at above 1,000 volts. Existing major loads may be summarized as, for instance, the total demand on a panelboard or motor control center not directly involved in the re-model.

Show transformer over-current protection and wire sizes on primary and secondary side.

Show each panelboard installed or affected by the project and all loads fed by the panelboard. Lighting and general receptacle loads may be summarized (Multiple circuits shown as one with notation like "GENERAL RECEPTACLE LOADS, CIRCUITS # 2, 3, 7, 15, …" with the total load noted for all receptacles).

On the panelboard bus line, show, as a minimum, panel bus ampacity, voltage, fault withstand rating, and panel name.

Note, at significant points on the one-line, the calculated available fault current.

At each piece of electrical equipment that can be opened and expose energized parts, provide an "ARC FLASH HAZARD ANALYSIS" per the section "ARC FLASH HAZARD ANALYSIS."

Show at each transformer the primary and secondary voltage, number of phases, connection configuration (delta or Y, grounded or ungrounded), kVA rating, and transformer name ("T1," etc.).

Show ampere trip rating of each over current device shown on the one-line diagram. If a circuit breaker of over 100 amp frame size, show frame size (Like 150 AT/250 AF – 150 Amp Trip, 250 Amp Frame).

Note wire sizes for each circuit. Global notation may be used – "All wire #12, all conduit ¾" unless noted otherwise." Then note different sizes.

Note conduit sizes for each circuit. Global notation may be used – "All wire #12, all conduit ¾" unless noted otherwise." Then note different sizes.

Show enclosures and raceways of interest, such as gutters or large, specific junction or pull boxes.

XV. SECTION 264000 FIRE ALARM SYSTEMS

For smoke detectors, use the analog type.

Avoid rate of rise and fixed temperature heat detectors. Generally, use electronic thermistor type. For hazardous locations, use rate compensated type.

Limit each detector or annunciator circuit load to 75% of circuit ampacity.

Conform to ADA requirements by designing for horn/strobe annunciators. Conform to IBC.

New fire alarm systems shall use addressable device technology.

Require fire alarm systems from manufacturers that provide training on the technician level to the City of Tucson Fire Alarm Technicians. The training shall be on the furnished system as installed for the project. The training shall be by the local warranty vendor. The City of Tucson realizes that this training may be at additional cost of the alarm components and installation. Fire Alarm specifications shall include a requirement for the contractor to furnish this training. The training is a one-time session for instruction on basic operation; alarm and trouble local response, meanings of various other alarms and signals and the appropriate response.

Acceptable Manufacturers are : Simplex/Tyco., Notifier, and F.C.I.

XVI. SECTION 265000 INDIVIDUAL FACILITIES

Fire Stations

Interlock door operators in apparatus bay with exhaust fans, evaporative coolers, and heaters. When a door opens, exhaust fans and evaporative coolers shall come on, and heaters shall go off; fans and/or coolers shall operate on a timer set for a minimum of 15 minutes, depending on the air exchange. Provide a schematic for the magnetic starter, timer, low voltage relays, and H/O/A switch. Provide louvers in Apparatus Bay Doors for exhaust fan operation.

All apparatus bay receptacles shall be GFCI, 36” above finished floor.

Install quadraplex receptacles in bedrooms.

All bedrooms or dormitory rooms shall have AFCI protection on the branch circuits.

Communication Rooms

Provide independent space cooling for all communication rooms. "Independent" shall mean a system of a "stand-alone" type. Detailed decisions of type of system will be made as part of the DD level of design, prior to submittal for DD review.

Provide EMCS temperature monitoring probes.

Provide redundant and/or back-up independent HVAC units for all communication rooms.

Provide adequate lighting for repair work, minimum 50 vertical footcandles, average, over the entire face of each equipment rack, both sides. Uniformity ratio shall not exceed 4:1 Minimum to Average.

I. ARC FLASH HAZARD STUDY

A. DESCRIPTION

1. Provide an Arc Flash Hazard Study for the electrical distribution system shown on the one line drawings. The intent of the Arc Flash Hazard Study is to determine hazards that exist at each piece of electrical equipment shown on the one line drawing. Include all switchgear, switchboards, panelboards, motor control centers, Power Distribution Units, Uninterruptable Power Supplies, and Automatic or Manual Transfer Switches and any other access point in the electrical system that can expose energized parts when any maintenance cover of the access point is removed. By "Maintenance Cover," this Standard refers to any cover intended by the manufacturer as a removable cover to gain access into the interior of the equipment.

2. The Study will include creation of Arc Flash Hazard Warning Labels. These labels serve as a guide to assist technicians and others in the selection of proper Personal Protective Equipment when working around exposed and energized conductors. The electrical contractor shall supply and install the labels. The Engineer shall provide the results of the Study.

3. If an existing, up-to-date, Short-circuit and Protective Device Coordination Study is not available, perform a Short-circuit and Protective Device Coordination Study for the electrical distribution system before performing the Arc Flash Hazard Study.

4. The arc flash hazard study shall consider operation during normal conditions, alternate condition operations, emergency power conditions, and any other operation configurations which could result in a maximum arc flash hazard.

B. QUALIFICATIONS

1. The Consultant shall have the study prepared by a qualified Electrical Engineer, Registered Professional Electrical Engineer in Arizona, with at least ten (10) years of experience and specializes in performing power system studies.

2. The arc flash hazard study shall be performed using SKM Power*Tools for Windows, EDSA, or ETAP Electrical Engineering computer software packages.

C. SUBMITTALS

1. The consultant shall submit the arc flash hazard study and arc flash hazard warning labels at least 30 days prior to energizing the electrical equipment.

2. Submit three (3) copies of the arc flash hazard study and (1) set of warning labels.

D. SHORT CIRCUIT STUDY

1. Provide a current, up-to-date short circuit current study. If one does not exist, then perform a short circuit study in accordance with IEEE Std 399 (Brown Book), "IEEE Recommended Practice For Industrial and Commercial Power System Analysis," based upon the positive and zero sequence source impedance supplied by the local energy provider.

E. PROTECTIVE DEVICE COORDINATION STUDY

1. Provide a current up-to-date protective device coordination study. If one does not exist, then perform a protective device coordination study in accordance with IEEE Std 242 (Buff Book), "IEEE Recommended Protection and Coordination of Industrial and Commercial Power Systems."

F. ARC FLASH HAZARD STUDY

1. Perform an arc flash hazard study after the short circuit and protective device coordination studies have been completed based upon IEEE Std 1584, "IEEE Guide For Performing Arc Flash Hazard Calculations."

2. The study shall be calculated by means of the SKM PowerTools for Windows computer software package. Pertinent data, rationale employed, and assumptions in developing the calculations shall be incorporated into the introductory remarks of the study.

3. The study shall be in accordance with applicable NFPA 70E, OSHA 29-CFR, Part 1910 Sub part S and IEEE 1584 Standards.

4. Determine the following:
   a. Flash Hazard Protection Boundary
   b. Limited Approach Boundary
   c. Restricted Boundary
   d. Prohibited Boundary
   e. Incident Energy Level
   f. Required Personal Protective Equipment Class (Required Protective Fire Rated Clothing Type and Class)

5. Produce an Arc Flash Warning label listing items A – G above. Also include the equipment name, system operating voltage, and date of issue.

6. Require the labels be printed in color, other than black on white or white on black, and on adhesive backed labels.

7. Produce Equipment Detail sheets that lists the items 4. A-G above and the following additional items:
   a. Bus Name
   b. Upstream Protective Device Name, Type, Settings and location
   c. Bus Line to Line Voltage

8. Produce Arc Flash Evaluation Summary Sheet listing items 4.A-G, 7. A-C, above, and the following additional items:
   a. Bus Bolted Fault
   b. Protective Device Bolted Fault Current
   c. Arcing Fault Current
   d. Protective Device Trip / Delay Time
   e. Breaker Opening Time
   f. Equipment Type
   g. Working Distance

9. For existing equipment in remodels, analyze the short circuit, protective device coordination, and arc flash calculations and highlight any equipment that is determined to be underrated or causes an abnormally high incident energy calculation.

10. Identify any deficiencies. Proposed major corrective modifications will be taken under advisement by the City Electrical Engineer in consultation with the Consultant Electrical Engineer. The Contractor will be given further instructions.

G. WRITTEN REPORT

1. The results of the power system study shall be summarized in a final written report. The report shall include the following sections:

   a. Executive Summary - A synopsis of our overall findings, including but not limited to equipment locations with highest incident energy levels, total number of overcurrent protective devices with inadequate short circuit current interrupting ratings, and identification of equipment protective boundary conflicts.

   b. Introduction -A brief paragraph to explain the necessity of performing an arc-flash hazard analysis and the criterion used during the project.

   c. Methodology - A brief paragraph to explain the basis for the analyses performed for the project.

   d. Assumptions - A list of all engineering assumptions made and why they were made during the course of the analysis.

   e. Discussion - A brief, but through, discussion of each of the following power system analyses performed for the project:
      i Short Circuit Analysis: If an existing Short Circuit Analysis was available, just make a statement to that affect.
      ii Protective Device Coordination Study: If an existing Protective Device Coordination Analysis was available, just make a statement to that affect.
      iii Arc-Flash Hazard Analysis

   f. Recommendations - Provide clear and detailed recommendations to correct any deficiencies, reduce existing incident energy levels and/or to improve overall future maintenance & operation of the system studied.

   g. Bibliography - Industry references used to complete the arc-flash analysis for the system studied.

H. REPORT BINDER

1. The arc flash hazard report binder shall contain the written report above plus the additional following sections:
   a. Short Circuit Analysis Results
   b. Equipment Evaluation Study Results
   c. Time Current Curves Plotted In Color On Log-Log Graph
   d. Arc Flash Hazard Analysis Results In MS Excel Format
   e. Electrical One-Line Input Data Used In Computer Software Model

f. Electrical One-Line Diagram w/ Incident Energy, Flash Protection Boundary, and Pertinent Equipment and Component Ratings

2. The final report binder shall be of a “lay-flat-when-open” type; plastic comb, plastic or metallic spiral, or other.

SEE ATTACHED COMMUNICATIONS AND NETWORKING GUIDELINES

I. Guide to using the Communications and Networking Guidelines.

II. Amendment 1 to the Communications and Networking Guidelines.

The City will retain the BLACK, IVORY GRAY & WHITE colors for the standard I/0 tele/data information outlets, in their perspective order 1,2,3,&4. We have now agreed on a color code, for other disciplines that only take one Cat 5e cable. Special Systems such as; security jacks, wall phone jacks, wireless jacks, & EMCS jacks. These disciplines will terminate at the end of the standard I/0 colors, in patch panels of twelve in a row. The current patch panels, we specify out, and are currently using will continue to work for these Special Systems jacks.
Security items =red jacks
Wall or single phones =blue jacks
Wireless outlets =green jacks
EMCS controls =orange jacks

13. All conduits not occupied by innerduct and tracer wire shall have an unspliced unknotted 2500 pound test 22AWG detectible mule tape installed and secured with 4' slack at each pullbox.

14. All conduit shall be capped and covered with aggregate bedding material, or encased after each day's work to prevent shrinkage and other displacement of the conduit.

15. All materials and appurtenances called out on the plans or required for a complete system shall be new. No used or refurbished items or materials shall be allowed.

16. If there is any conflict among the plans, special provisions, and/or the standard details or specifications of the City of Tucson, or any conflicts within the documents cited above, the higher standard shall apply.

17. Upon project completion, the Contractor shall supply new blueprints and electrically formatted drawings, which reflect all changes and "asbuilt" information

For City Architecture & Engineering Division End Users and Customers

LOCAL AREA NETWORK (LAN) STATION CABLE

Definition:

The workstation cable refers to the category five extended data cable that connects the user's equipment to the in-building data wiring system.

Standard:

(1) Workstation cable shall not exceed 15 feet from modular plug to modular plug.
(2) Workstation cable shall be purchased pre-assembled with a category five extended certification.

Exception:

Contact Communications at 791-3121 for special situations that require greater than 15-foot cables.

COMPUTER WORKSTATION/PERIPHERALS AC POWER SURGE PROTECTION

Definition:

A portable multi-outlet passive protection device used to remove, filter or clamp harmful or disruptive AC power deviations.

Standard:

The surge protector shall be a Tripp Light, Model ISOBAR x or approved equal.

Exceptions:

Contact Communications at 791-3121 for special surge protection requirements.

LOCAL AREA NETWORK (LAN) INFORMATION OUTLET

Definition:

A quadraplex wall mounted data connection device that provides three in-building data jacks and one in-building telephone jack.

City Architecture & Engineering Division General On-Site Design Requirements

Design. The design of the conduit system shall adhere to TIA/EIA 569B standards, TIA/EIA758A standards, and shall accommodate the cabling requirements of TIA/EIA 568-B.1, 568-B.2, and 568-B.3 standards.

General Alignment. Where installed along side of other utilities, conduit alignment shall follow the general horizontal alignment of such underground utilities to the fullest extent possible. Utilize joint trenching as much as practicable to reduce the cost associated with trench work. When the alignment of the trenching for the other utilities does not allow for the installation of the City fiber conduit, the conduit shall be installed in a separate trench.

Distance Between Pull Boxes or Vaults. The absolute maximum length of the conduit between pull boxes or vaults shall not exceed 600 feet.

Vertical and Horizontal Alignment. The horizontal and vertical alignment of the conduit system shall be the straightest alignment feasible. The design shall minimize horizontal and vertical drift in the conduit runs. Transitions and bends shall be made using the longest radius possible.

Maximum Bends Between Pulling Points. The sum of all horizontal and vertical bends shall not exceed 270 degrees in any conduit run. Bends with a radius of 500 feet, or greater, may be excluded from this criterion.

Innerduct And Tracer Wire. All 4 inch conduits, except those referred to below as dedicated to Telephone and CATV, shall have 4 (quantity) 1 inch ***smoothwall*** *exterior ribbed interior* innerducts with a continuous 1250 pound test mule tape installed in each innerduct, along with 1 (quantity) 10 AWG green continuous nonspliced copper tracer wire installed in the 4 inch conduit.

Watertight Alibi. Watertight Alibi shall consist of a Quadraplex Duct Plug designed to seal around, organize, and support innerduct where it emerges at the top of all risers, pull boxes, and vaults. Fasteners shall be stainless steel. Plug shall support a minimum of 400 lbs of cable, and shall be removable. Jackmoon or equivalent. No chemical seals will be accepted

Blank Duct Plugs. Blank Duct Plugs shall be installed in each individual innerduct where it emerges at the top of all risers, pull boxes, and vaults. Shall be all plastic construction, corrosion proof, water and air tight to 30 psi. Jackmoon or equivalent.

Standard Conduit Requirements. Unless otherwise approved, all Wide Area Network (WAN) conduit shall be 4 inch, schedule 40 PVC conduit buried a minimum of 36" to the top of the conduit below finished grade. In special cases, such as in association with borings, rolled pipe (HDPE) may be utilized when approved by the City of Tucson Construction Representative and the CE Representative. The number and size of the HDPE will be selected based on the specifics of the location. Pull boxes shall be installed at the termini of each conduit run. In addition to the (2) 4" schedule 40 PVC conduits for the WAN referenced above, (1) 4" schedule 40 PVC conduit shall be installed for cable television (CATV) facilities, and (1) 4" schedule 40 PVC conduit shall be installed to the Entrance Facility (EF) for Telephone, or the current Long Distance Carrier. Coordinate with the Authority Having Jurisdiction (AHJ) for Telephone and CATV conduit routing, terminations, and project-specific requirements.

Concrete Encasement. All conduits installed under roadways and parking lots on City property shall be encased in Class B (2500psi) concrete a minimum of 3" on all sides. All other conduit runs on City property and City Right of Way shall be given serious consideration as candidates for encasement in concrete. Coordinate with CE, who will balance such considerations as the critical nature of the facility, existence of alternate paths, backup communications paths, and the costs involved. Details and specifications shall reflect actual project conditions.

Peripheral Communications Equipment. Any peripheral equipment associated with cable TV (video), phone service (voice), or data (Internet) shall be installed in as unobtrusive, discreet, and disguised manner as is practicable given all design constraints. If at all possible, such devices shall be buried. Where this is not possible, every effort must be made to install communication devices either:

- Hidden from public view, or
- Disguised as a natural part of the environment (such as a rock or boulder, natural vegetation, etc.) or building.

Hidden or disguised equipment must not interfere with pedestrian flow.

Energy Management Control System (EMCS). All new COT facilities shall be provided with an Information Outlet in the physical plant or mechanical room. Any mechanical system not physically located in the physical plant or mechanical room shall have an alarm circuit that is connected to the EMCS. Coordinate EMCS design requirements with COT Energy Manager from General Services Department.

City Department of Transportation Project Managerial Requirements

Design shall conform to sections 17000 and 975, Telecommunications Infrastructure. Project Managers shall instruct their consultant designers to verify that any written specifications be formatted as applicable to each project such that there is no room for misinterpretation on the part of any contractor or field inspector. Although Project Managers and their Consultants may import the content of these requirements and standards into their project designs, said requirements and standards are no substitution for due diligence in design, procurement, and construction. **Details and specifications shall reflect actual project conditions.**

The section entitled "City Department of Transportation Project Execution Requirements" has been broken out for the convenience of all Project Managers. However, it is the Department of Transportation (DOT) Project Manager's responsibility to verify that any work delegated to outside consultants is performed in compliance with these City of Tucson Standards.

Project Managers shall coordinate with Communications Engineering (CE) to determine the optimum routing of the City fiber conduit. Final cost estimation for said connections shall be detailed as a part of the subject project.

CE shall be included in the review process for all DOT projects. It shall be the ultimate responsibility of the Project Manager to insure that all CE comments are conveyed to any designer, and are properly addressed.

Project Construction Administrators shall coordinate with CE during the construction period. This coordination shall include a discussion of all system modifications, and the schedule of inspections and system testing. All tests shall be witnessed by a CE representative. Final acceptance of the project shall not be issued until such time that CE or its representative approves and accepts the City fiber conduit system. The representative of CE observing the testing of the conduits may install a tag labeled "DEDICATED CITY OF TUCSON COMMUNICATION CONDUIT. CONTACT TECHNICAL PLANNING AND RESOURCES DIVISION BEFORE USING." when the conduit run has satisfactorily passed all testing. No party other than CE shall remove said plug and label once it is installed.

Upon project completion, the Project Inspector shall verify that the Contractor has supplied CE with asbuilt drawings on reproducible velum paper.

City Department of Transportation Project Execution Requirements

For applications where conduit for the fiber optic infrastructure is to be installed under funding specific to the subject project, the only items to be installed shall be the 4" conduit itself, a 2500 # rated pull strength traceable mule tape, conduit end caps, and #7 Pull boxes w/Extension at 600 foot maximum intervals and at project termini. Pullbox shall have bolted lids stating "COMMUNICATIONS". If open trenching is employed, metallic fiber optic warning tape shall be installed. A ground rod, supplied by the Communications Engineering Division, shall be installed at each pullbox.

Mandrel testing of this conduit system shall be witnessed by a Communications Engineering (CE) representative before final acceptance. If the mandrel test fails, the Contractor shall repair or replace the conduit system and re-test at no cost to the City of Tucson. After a successful mandrel test, a 2500-lb. continuous traceable mule tape shall be installed in each conduit run, leaving a 5 foot coil in each pullbox and tied off. Each conduit run shall then be capped at both ends and secured to prevent debris from entering the system.

Until further notice, any requirements and guidelines below which exceed this de minimus concept shall be applied in circumstances only where adequate funding sources have been identified for such.

The communications/data section of specifications manual shall be numbered separately and distinctly from other sections. Format shall follow the section entitled "Section 975 – Telecommunications Infrastructure: DOT Format". "Details" have also been incorporated into City of Tucson (City) requirements for City Department of Transportation projects.

As part of each submittal, Communications Engineering (CE) shall be furnished with a tabulation of the following system information.

(A) The station and offset of each pull box and vault.
(B) The total length of each conduit run between pulling points.
(E) The total degree of bends of all vertical and horizontal bends between pulling points.
(F) The latitude and longitude of the centerline of the pull boxes and vaults.
(E) Specific stub-out locations proposed for each pullbox and vault.

The design of the conduit system shall adhere to TIA/EIA 569B standards, TIA/EIA 758A standards, and shall accommodate the cabling requirements of TIA/EIA 568-B.1, 568-B.2, and 568-B.3 standards. Design and construction shall also comply as applicable to the Pima County/City of Tucson Standard Specifications and Details for Public Improvements and to the Tucson Water Standard Specifications.

The plans shall be prepared using the drafting standards of the Department responsible for the project. Plans depicting installations exterior to buildings shall be drafted in accordance with

Pima County/City of Tucson Standard Detail Numbers 100 and 101. The conduit shall be clearly indicated with respect to its horizontal and vertical alignment.

The alignment of the conduit shall follow the general horizontal alignment of new water lines, street lighting and traffic signal conduits, or other underground utilities to the fullest extent possible. The utilization of a joint trench shall be employed as much as practicable. When street lighting or traffic signal conduit is encased in concrete, the fiber optic conduit shall be encased in concrete also. When the alignment of the trenching for the other utilities does not allow for the installation of the City fiber conduit, the conduit shall be installed in a separate trench.

The absolute maximum length of the conduit between pull boxes or vaults shall not exceed 600 feet.

When installed adjacent to water mains, the conduit shall be encased in Controlled Low Strength Material (CLSM). The conduit shall be supported on plastic spacers capable of preventing displacement of the conduit during the placement of the CLSM. During the placement of the encasement material, the conduits shall be tied down to prevent the conduit from floating. The minimum cover on all sides of the conduit shall be 3 inches.

In all areas where the depth of cover above the conduit is less than 30”, the conduit shall be encased in concrete. The concrete encasement shall be a minimum of Class B (2,500 PSI) in accordance with Pima County/City of Tucson Standard Specifications and provide a minimum cover on all sides of the conduit of 3 inches.

When the conduit is installed in a joint trench with a water main, the bedding and shading material shall be aggregate bedding material meeting the specifications for the water main. The conduit shall be installed at an invert equal to, or above, that of the water line and offset from the water line as indicated on the Standard Details (Appendix B). The selection of the location of the conduit shall be approved by Tucson Water. The conduit(s) shall generally be installed at a uniform depth of cover. However, when the vertical alignment of the water main offers a smoother profile for the conduit, the conduit(s) may follow the general alignment of the water main. At crossings of other utilities, where the water main is rolled under another utility line, effort(s) shall be made to maintain the vertical alignment of the conduit. In cases where it is impossible to maintain the alignment of the conduit at the utility crossing, the grade of the conduit shall be transitioned using the minimum number and the longest radius bends. To accomplish this, the water system design shall consider the use of 11-1/4 degree bends, or 22-1/2 degree bends for the water line.

The horizontal and vertical alignment of the conduit system shall be the straightest alignment feasible. The design shall minimize horizontal and vertical drift in the conduit runs. Transitions and bends shall be made using the longest radius possible. Bends shall not be installed unless absolutely necessary. The sum of all horizontal and vertical bends shall not exceed 270 degrees in any conduit run. Bends with a radius of 500 feet, or greater, may be excluded from this criterion.

Unless otherwise approved, all conduit shall be 4 inch, schedule 40 PVC conduit. In special cases, such as in association with borings, rolled pipe (HDPE) may be utilized when approved by the City Construction Representative and the CE Representative. The number and size of the HDPE will be selected based on the specifics of the location.

Conduit with integral innerduct shall be accepted as an alternate to the 4" PVC, with rigid steel bends and their related innerduct installed separately. Such conduit shall meet the requirements of Section 975.

Pull boxes shall be installed at the termini of each project, at locations within the conduit system as required to meet the recommended maximum conduit length and the maximum degree of bends, and at locations required to facilitate the connection to existing and future conduit runs. Pull boxes shall be constructed and installed according to the Pima County/City of Tucson Specifications and Details for Public Improvements, Number Seven Pullbox with Extension. The boxes shall be furnished with a lockable, or bolted, cover labeled "communications".

In the selection of pull box locations, consideration shall be given to potential location of future City fiber optic conduit runs intersecting the project. At all locations where existing, or future, conduit runs cross the project, a pull box shall be located near the point of intersection. At all locations where new conduit crosses an existing City fiber conduit, a pathway shall be provided between the conduit runs. At locations of future conduit runs, a conduit stub-out shall be installed along the future alignment, to a location which is outside of the limits of any future pavement. Pull boxes shall be located in the vicinity of City facilities scheduled to be connected to the City fiber system. When pull boxes are located near a signalized intersection, the pull box shall be located as near as practicable to the Control Cabinet, and connected to it.

For Rio Nuevo Roadway work, all peripheral equipment associated with cable TV (video), phone service (voice), or data (Internet) shall be installed in an unobtrusive, discreet, and disguised manner. If at all possible, such devices shall be buried. Where this is not possible, communication devices must then be either hidden from public view, or disguised as a natural part of the environment (such as a rock or boulder, natural vegetation, etc.) or building. Hidden or disguised equipment must not interfere with pedestrian flow or block scenic views, disturbing the aesthetics of the area. Equipment areas should not be fenced unless such fencing is installed to meet Code requirements or standard design practice as applicable to life safety issues; in such cases this fencing shall meet the intent of this paragraph in its aesthetic presentation. The equipment must not emit detectable noises or sounds unless they are placed far enough from pedestrian traffic flow that the noise is undetectable. The telephone number for Graffiti Abatement shall be discreetly posted toward the bottom of the equipment. It shall be the responsibility of any vendor or provider to periodically check equipment to ensure that it complies with these standards. Noncompliant vendors may be fined or directed to relocate or remove equipment. Obsolete or unused facilities which have not served a customer for 90 days shall be removed in a timely manner. Cost of removal shall be the responsibility of the vendor or provider.

All drawings shall include the following general notes:

WIDE AREA NETWORK (WAN) CONDUIT SYSTEM GENERAL NOTES:

1. All existing City fiber facilities shall be protected in-place unless specifically noted otherwise on the construction documents. No existing City fiber optic conduit system or cable shall be altered in any way without the written approval of the City Communications Engineering Division.

2. All new City fiber conduit systems shall cleaned and mandrel tested by the contractor in the presence of a Communications Engineering (CE) representative. Provide 72 hour advance notice to Bobby Sweet at 419-3459.

3. Conduit ends shall be capped when work is not in progress. RGS sweeps terminating in pull boxes shall be plugged.

4. It shall be the sole responsibility of the Contractor to repair all existing City conduit systems and appurtenances damaged by construction. Immediate notification of any damaged existing conduit system, whether occupied or unoccupied, shall be reported to the Construction Administrator and the Communication Maintenance Division, at 791-4634 Monday through Friday between 7:30am to 4:30pm or 791-4830 after hours and weekends.

5. For repairs of occupied City fiber conduit systems, the Contractor shall repair, clean and mandrel test the conduit systems in the presence of a Communication Maintenance representative. The contractor shall install, re-terminate, and test new approved optical fiber cable as directed by the Communication Maintenance representative. The Contractor shall present such representatives with test results, in booklet form and ASCII format, with one licensed version of the original test equipment software, which will allow the City to view the test results as the software was designed. Acceptance of the work shall not occur before all documentation, test results, certification of test results and operation by such representatives has been approved.

6. For repairs of unoccupied City fiber conduit systems, the Contractor shall repair, clean and mandrel test the conduit systems in the presence of a Communication Maintenance representative.

7. All pull boxes/vaults shall be provided with a 5/8” by eight foot ground rod and acorn, driven vertically in the corner with six inches of rod exposed above the top of the drainage rock.

8. The absolute maximum length between pull boxes or vaults shall not exceed 600 feet.

9. Communications conduit between pull boxes/vaults shall have a maximum deflection of 270 degrees.

10. Communications conduit shall be buried a minimum of 36" to the top of the conduit below finished grade.

11. Communications conduit shall be 4" schedule 40 PVC.

12. All bends 45 degrees and larger shall be rigid galvanized steel sweeps 12 times the conduit diameter or 48" radius, double wrapped with 10 mil PVC tape.

13. All conduits not occupied by innerduct and tracer wire shall have an unspliced unknotted 2500 pound test 22AWG detectable mule tape installed and secured with 4' slack at each pullbox.

14. All conduit shall be capped and covered with aggregate bedding material, or encased after each day's work to prevent shrinkage and other displacement of the conduit.

15. All materials and appurtenances called out on the plans or required for a complete system shall be new. No used or refurbished items or materials shall be allowed.

16. If there is any conflict among the plans, special provisions, and/or the standard details or specifications of the City of Tucson, or any conflicts within the documents cited above, the higher standard shall apply.

17. Upon project completion, the Contractor shall supply new blueprints and electrically formatted drawings, which reflect all changes and "asbuilt" information

DEPARTMENT OF INFORMATION TECHNOLOGY
Communications Engineering

Tucson Regional Communications and Networking Standards

City of Tucson Proprietary
Requirements for New and Existing City Facilities

Local and Wide Area Networks
Radio Communications
Rio Nuevo Planning and Execution

April 2007

Project Managerial Requirements for Private Communications Projects in City Right-of-Way

Design shall conform to sections 17000 and 975, Telecommunications Infrastructure. Project Managers shall instruct their consultant designers to verify that any written specifications be formatted as applicable to each project such that there is no room for misinterpretation on the part of any contractor or field inspector. Although Project Managers and their Consultants may import the content of these requirements and guidelines into their project designs, said requirements and guidelines are no substitution for due diligence in design, procurement, and construction. **Details and specifications shall reflect actual project conditions.**

For the convenience of all Project Managers, the section entitled "Project Execution Requirements for Private Communications Projects in City Right-of-Way" has been broken out for distribution to design consultants. However, it is the Project Manager's responsibility to verify that any work delegated to outside consultants is performed in compliance with these City of Tucson Standards.

Project Managers shall coordinate with the City of Tucson Communications Engineering (CE) Division to determine the optimum routing of the City fiber conduit. Final cost estimation for said connections shall be detailed as a part of the subject project.

CE shall be included in the review process for all private projects executed in City Right-of-Way. It shall be the ultimate responsibility of the Project Manager to insure that all CE comments are conveyed to any designer, and are properly addressed.

Project Construction Administrators shall coordinate with CE during the construction period. This coordination shall include a discussion of all system modifications, and the schedule of inspections and system testing. All tests shall be witnessed by a CE representative. Final acceptance of the project shall not be issued until such time that CE or its representative approves and accepts the City fiber conduit system. The representative of CE observing the testing of the conduits may install a tag labeled "DEDICATED CITY OF TUCSON COMMUNICATION CONDUIT. CONTACT TECHNICAL PLANNING AND RESOURCES DIVISION BEFORE USING." when the conduit run has satisfactorily passed all testing. No party other than CE shall remove said plug and label once it is installed.

Upon project completion, Project Manager shall verify that the Contractor has supplied new blueprints and electrically formatted drawings which reflect all changes and "asbuilt" information.

Project Execution Requirements for Private Communications Projects in City Right-of-Way

The communications/data section of specifications manual shall be numbered separately and distinctly from other sections. Format shall follow the section entitled "Section 975 – Telecommunications Infrastructure". "Details" have also been incorporated into City of Tucson (City) requirements for private projects in City Right-of-Way.

As part of each submittal, Communications Engineering (CE) shall be furnished with a tabulation of the following system information.

(A) The station and offset of each pull box and vault.
(B) The total length of each conduit run between pulling points.
(G) The total degree of bends of all vertical and horizontal bends between pulling points.
(H) The latitude and longitude of the centerline of the pull boxes and vaults.
(E) Specific stub-out locations proposed for each pullbox and vault.

The design of the conduit system shall adhere to TIA/EIA 569B standards, TIA/EIA 758A standards, and shall accommodate the cabling requirements of TIA/EIA 568-B.1, 568-B.2, and 568-B.3 standards. Design and construction shall also comply as applicable to the Pima County/City of Tucson Standard Specifications and Details for Public Improvements and to the Tucson Water Standard Specifications.

The plans shall be prepared using the drafting standards of the Department responsible for the project. Plans depicting installations exterior to buildings shall be drafted in accordance with Pima County/City of Tucson Standard Detail Numbers 100 and 101. The conduit shall be clearly indicated with respect to its horizontal and vertical alignment.

The alignment of the conduit shall follow the general horizontal alignment of new water lines, street lighting and traffic signal conduits, or other underground utilities to the fullest extent possible. The utilization of a joint trench shall be employed as much as practicable. When street lighting or traffic signal conduit is encased in concrete, the fiber optic conduit shall be encased in concrete also. When the alignment of the trenching for the other utilities does not allow for the installation of the City fiber conduit, the conduit shall be installed in a separate trench.

The absolute maximum length of the conduit between pull boxes or vaults shall not exceed 600 feet. A continuous, no knots or splices, 2500# rated pull strength traceable mule tape shall be installed for the entire length of each conduit run. All conduit ends shall be capped. Each pullbox shall be provided with a 5/8" by eight foot ground rod and acorn, driven vertically in the corner with six inches of rod exposed above the top of the drainage rock.

When installed adjacent to water mains, the conduit shall be encased in Controlled Low Strength Material (CLSM). The conduit shall be supported on plastic spacers capable of preventing displacement of the conduit during the placement of the CLSM. During the

placement of the encasement material, the conduits shall be tied down to prevent the conduit from floating. The minimum cover on all sides of the conduit shall be 3 inches.

In all areas where the depth of cover above the conduit is less than 36” to the top of the conduit, the conduit shall be encased in concrete. The concrete encasement shall be a minimum of Class B (2,500 PSI) in accordance with Pima County/City of Tucson Standard Specifications and provide a minimum cover on all sides of the conduit of 3 inches.

When the conduit is installed in a joint trench with a water main, the bedding and shading material shall be aggregate bedding material meeting the specifications for the water main. The conduit shall be installed at an invert equal to, or above, that of the water line and offset from the water line as indicated on the Standard Details (Appendix B). The selection of the location of the conduit shall be approved by Tucson Water. The conduit(s) shall generally be installed at a uniform depth of cover. However, when the vertical alignment of the water main offers a smoother profile for the conduit, the conduit(s) may follow the general alignment of the water main. At crossings of other utilities, where the water main is rolled under another utility line, effort(s) shall be made to maintain the vertical alignment of the conduit. In cases where it is impossible to maintain the alignment of the conduit at the utility crossing, the grade of the conduit shall be transitioned using the minimum number and the longest radius bends. To accomplish this, the water system design shall consider the use of 11-1/4 degree bends, or 22-1/2 degree bends for the water line.

The horizontal and vertical alignment of the conduit system shall be the straightest alignment feasible. The design shall minimize horizontal and vertical drift in the conduit runs. Transitions and bends shall be made using the longest radius possible. Bends shall not be installed unless absolutely necessary. The sum of all horizontal and vertical bends shall not exceed 270 degrees in any conduit run. Bends with a radius of 500 feet, or greater, may be excluded from this criterion.

Unless otherwise approved, all conduit shall be 4 inch, schedule 40 PVC conduit. All bends 45 degrees and larger shall be rigid steel conduit, having a minimum radius of 12 times the nominal diameter of the conduit. The exterior of the steel bends shall be double wrapped with 10 mil PVC tape. In special cases, such as in association with borings, rolled pipe (HDPE) may be utilized when approved by the City Construction Representative and the CE Representative. The number and size of the HDPE will be selected based on the specifics of the location.

Conduit with integral innerduct shall be accepted as an alternate to the 4” PVC, with rigid steel bends and its related innerduct installed separately. Such conduit shall meet the requirements of Section 975.

Pull boxes shall be installed at the termini of each project, at locations within the conduit system as required to meet the recommended maximum conduit length and the maximum degree of bends, and at locations required to facilitate the connection to existing and future conduit runs. Pull boxes shall be constructed and installed according to the Pima County/City of Tucson

Specifications and Details for Public Improvements, Number Seven Pullbox with Extension. The boxes shall be furnished with a lockable, or bolted, cover labeled "communications".

In the selection of pull box locations, consideration shall be given to potential location of future City fiber optic conduit runs intersecting the project. At all locations where existing, or future, conduit runs cross the project, a pull box shall be located near the point of intersection. At all locations where new conduit crosses an existing City fiber conduit, a pathway shall be provided between the conduit runs. At locations of future conduit runs, a conduit stub-out shall be installed along the future alignment, to a location which is outside of the limits of any future pavement. Pull boxes shall be located in the vicinity of City facilities scheduled to be connected to the City fiber system. When pull boxes are located near a signalized intersection, the pull box shall be located as near as practicable to the Control Cabinet.

For Rio Nuevo Roadway work, all peripheral equipment associated with cable TV (video), phone service (voice), or data (Internet) shall be installed in an unobtrusive, discreet, and disguised manner. If at all possible, such devices shall be buried. Where this is not possible, communication devices must then be either hidden from public view, or disguised as a natural part of the environment (such as a rock or boulder, natural vegetation, etc.) or building. Hidden or disguised equipment must not interfere with pedestrian flow or block scenic views, disturbing the aesthetics of the area. Equipment areas should not be fenced unless such fencing is installed to meet Code requirements or standard design practice as applicable to life safety issues; in such cases this fencing shall meet the intent of this paragraph in its aesthetic presentation. The equipment must not emit detectable noises or sounds unless they are placed far enough from pedestrian traffic flow that the noise is undetectable. The telephone number for Graffiti Abatement shall be discreetly posted toward the bottom of the equipment. It shall be the responsibility of any vendor or provider to periodically check equipment to ensure that it complies with these standards. Noncompliant vendors may be fined or directed to relocate or remove equipment. Obsolete or unused facilities which have not served a customer for 90 days shall be removed in a timely manner. Cost of removal shall be the responsibility of the vendor or provider.

All drawings shall include the following general notes:

WIDE AREA NETWORK (WAN) CONDUIT SYSTEM GENERAL NOTES:

1. All existing City fiber facilities shall be protected in-place unless specifically noted otherwise on the construction documents. No existing City fiber optic conduit system or cable shall be altered in any way without the written approval of the City Communications Engineering Division.

2. All new City fiber conduit systems shall cleaned and mandrel tested by the contractor in the presence of a Communications Engineering (CE) representative. Provide 72 hour advance notice to Bobby Sweet at 419-3459.

3. Conduit ends shall be capped when work is not in progress. RGS sweeps terminating in pull boxes shall have a plastic bushing installed.

4. It shall be the sole responsibility of the Contractor to repair all existing City conduit systems and appurtenances damaged by construction. Immediate notification of any damaged existing conduit system, whether occupied or unoccupied, shall be reported to the Construction Administrator and the Communication Maintenance Division, at 791-4634 Monday through Friday between 7:30am to 4:30pm or 791-4830 after hours and weekends.

5. For repairs of occupied City fiber conduit systems, the Contractor shall repair, clean and mandrel test the conduit systems in the presence of a Communication Maintenance representative. The contractor shall install, re-terminate, and test new approved optical fiber cable as directed by the Communication Maintenance representative. The Contractor shall present such representatives with test results, in booklet form and ASCII format, with one licensed version of the original test equipment software, which will allow the City to view the test results as the software was designed. Acceptance of the work shall not occur before all documentation, test results, certification of test results and operation by such representatives has been approved.

6. For repairs of unoccupied City fiber conduit systems, the Contractor shall repair, clean and mandrel test the conduit systems in the presence of a Communication Maintenance representative.

7. Each pullbox/vault shall be provided with a 5/8” by eight foot ground rod and acorn, driven vertically in the corner with six inches of rod exposed above the top of the drainage rock.

8. The absolute maximum length between pull boxes or vaults shall not exceed 600 feet.

9. Communications conduit between pull boxes/vaults shall have a maximum deflection of 270 degrees.

10. Communications conduit shall be buried a minimum of 36" to the top of the conduit below finished grade.

11. Communications conduit shall be minimum 4" schedule 40 PVC.

12. All bends 45 degrees and larger shall be rigid galvanized steel sweeps 12 times the conduit diameter or 48" radius, double wrapped with 10 mil PVC tape.

13. All conduits not occupied by innerduct and tracer wire shall have an unspliced unknotted 2500 pound test 22AWG detectable mule tape installed and secured with 4' slack at each pullbox.

14. All conduit shall be capped and covered with aggregate bedding material, or encased after each day’s work to prevent shrinkage and other displacement of the conduit.

15. All materials and appurtenances called out on the plans or required for a complete system shall be new. No used or refurbished items or materials shall be allowed.

16. If there is any conflict among the plans, special provisions, and/or the standard details or specifications of the City of Tucson, or any conflicts within the documents cited above, the higher standard shall apply.

17. Upon project completion, the Contractor shall supply new blueprints and electrically formatted drawings, which reflect all changes and "asbuilt" information

Rio Nuevo Planning and Design Objectives

On a long-term planning horizon, the City of Tucson (City) will be involved in the execution of such developments as Rio Nuevo. It is important to establish a policy of overall uniformity and compatibility among facilities within in the Development, and as they articulate with other institutional facilities. Implementation of any requirements and guidelines shall commence at the programming stage, and be applied with thoroughness and consistency throughout the conceptual, design, and construction phases.

Elements of the communications system which shall be addressed are:

- Integration of the City fiber Underground Communications System with the master plan layout of all utilities serving the Project Area. This shall be executed as soon as possible in the planning process, with provisions for future growth and expansion. Joint use of trenches/utility tunnels shall be employed within the context of individual backfill and separation, and other requirements for each serving utility. The ideal approach would be to identify a single corridor to serve as a conveyance for all utilities, including but not limited to telecommunications, heating and cooling, electrical, gas, and water. Access points for repair and maintenance shall be coordinated as optimally as possible for all serving utilities.

- Interconnection of all facilities of any significance to the City's Regional Communication System.
- Intra-building Local Area Network (LAN).
- Assurance that all buildings of significant size be equipped with radio coverage sufficient to allow the provision of police, fire, medical, and other critical services.
- Identification and dedication of appropriate sites for antennae and other wireless communications devices, as soon as possible in the planning process. Cellular towers to be built in the Rio Nuevo area must be located in designated locations to be determined. Rooftops of buildings in Rio Nuevo may be used for the placement of antennae and dishes. However, cellular towers and antennae placements must be submitted to City's Communications Engineering (CE) Division, and shall be in compliance with the City's Land Use Code. Additionally, all such structures on City property shall go through the City's telecommunications lease process administrated by its Information Technology Department. Rooftop antennae must be disguised or hidden from public view from the ground. Methods for hiding or disguising such equipment include hiding them behind radio frequency (rf) transparent rooftop parapets or other structural components or placing them toward the center of a rooftop. Antenna or dish size shall be kept to a minimum and larger equipment will be prohibited. Equipment shelter size shall also be kept to a minimum of height and footprint. Size of antennae, dishes and equipment shelters will be at the discretion of the City. Obsolete or unused facilities which have not served a customer for 90 days shall be removed in a timely manner. Cost of removal shall be the responsibility of the vendor.
- There shall be no telecommunications overhead wires or optical fiber. All such infrastructure will be underground.

Rio Nuevo Execution Requirements

Developers, Project Managers, and their representatives for Roadway and Architecture/Engineering projects shall instruct their consultant designers to verify that any written specifications be formatted as applicable to each project such that there is no room for misinterpretation on the part of any contractor or field inspector. Although such consultants may import the content of any requirements or guidelines elsewhere in this document into their project designs, said requirements and guidelines are no substitution for due diligence in design, procurement, and construction. Details and specifications shall reflect actual project conditions.

Developers, Project Managers, and their representatives shall comply with the requirements of Sections of this document entitled "Rio Nuevo General On-Site Design Requirements", "Details", "800 Mhz In-Building Amplification System Requirements", and the requirements of this section, as applicable to their specific projects. Specifications for Roadway projects shall conform to the Section entitled "Section 975 - "Telecommunications Infrastructure: DOT Format." Specifications for Architecture/Engineering projects may refer to the Section entitled "Section 17000 – Telecommunications Infrastructure: CSI Format." Any conduit, pull boxes, or vaults installed in either of the above project categories shall be installed in conformance with the "Details" elsewhere in this document. Customers and end users in facilities constructed as Architecture/Engineering projects may find the Section entitled "For City Architecture & Engineering Division End Users and Customers" to be helpful.

Developers, Project Managers, and their representatives for Roadway and Architecture/Engineering projects shall coordinate with the City of Tucson Communications Engineering (CE) Division to determine the optimum connection point and routing to the City fiber conduit system. Final cost estimation for said connections shall be detailed as a part of the subject project. For the purposes of site selection, it may be helpful to access the web site http:/dot.ci.tucson.az.us/mapcenter/, select "TDOT Maps", and view "Fiber Optic".

In the selection of pull box locations, consideration shall be given to potential location of future City fiber optic conduit runs intersecting the project. At all locations where existing, or future, conduit runs cross the project, a pull box shall be considered near the point of intersection. At all locations where new conduit crosses an existing City fiber conduit, a pathway shall be considered between the conduit runs. At locations of future conduit runs, a conduit stub-out shall be installed along the future alignment, optimally to a location which is outside of the limits of any future pavement. Pull boxes shall be located in the vicinity of facilities scheduled to be connected to the City fiber conduit system. Another criterion for the selection of pull box locations is the location of traffic signal control cabinets. When pull boxes are located near a signalized intersection, the pull box shall be located as near as practicable to the Control Cabinet.

It is the responsibility of the Developer, Project Manager, and representative of such to coordinate with CE in order to determine whether an underground conduit run on City Property is a candidate for encasement in concrete. Such considerations as the critical nature of the

facility, existence of alternate paths, backup communications paths, and the costs involved will be balanced.

All communications projects containing inter-building and intra-building conduit and wiring and their terminal devices shall be designed by a Registered Communications Distribution Designer (RCDD) with a current Building Industry Consulting Service International (BICSI) registration number stamp.

The design of the conduit system shall comply with BICSI's TDMM, EIA/TIA 569B standards, TIA/EIA 758A standards. They shall accommodate the cabling requirements of TIA/EIA 568-B.1, 568-B.2, and 568-B.3 standards, and shall conform to any applicable Pima County/City of Tucson Standard Specifications and Details for Public Improvements.

CE shall be included in the review process for all private projects executed in City Right-of-Way. It shall be the ultimate responsibility of the Project Manager to insure that all CE comments are conveyed to any designer, and are properly addressed.

The absolute maximum length of the conduit between pull boxes or vaults shall not exceed 600 feet.

The horizontal and vertical alignment of the conduit system shall be the straightest alignment feasible. The design shall minimize horizontal and vertical drift in the conduit runs. Transitions and bends shall be made using the longest radius possible. Bends shall not be installed unless absolutely necessary. The sum of all horizontal and vertical bends shall not exceed 270 degrees in any conduit run. Bends with a radius of 500 feet, or greater, may be excluded from this criterion.

Unless otherwise approved, all conduit shall be 4 inch, schedule 40 PVC conduit. All bends shall be rigid steel conduit, having a minimum radius of 12 times the nominal diameter of the conduit. The exterior of the steel bends shall be double wrapped with 10 mil PVC tape. In special cases, such as in association with borings, rolled pipe (HDPE) may be utilized when approved by the CE Division. The number and size of the HDPE will be selected based on the specifics of the location.

Conduit with integral innerduct shall be accepted as an alternate to the 4" PVC, with rigid steel bends and their related innerduct installed separately. Such conduit shall meet the requirements of Section 975.

All drawings shall include the following general notes:

WIDE AREA NETWORK (WAN) CONDUIT SYSTEM GENERAL NOTES:

1. All existing City fiber facilities shall be protected in-place unless specifically noted otherwise on the construction documents. No existing City fiber optic conduit system or

cable shall be altered in any way without the written approval of the City's Communications Engineering Division.

2. All new City fiber conduit systems shall be cleaned and mandrel tested by the contractor in the presence of a Communications Engineering (CE) representative. Provide 72 hour advance notice to Bobby Sweet at 419-3459.

3. Conduit ends shall be capped when work is not in progress. RGS sweeps terminating in pull boxes shall have a plastic bushing installed.

4. It shall be the sole responsibility of the Contractor to repair all existing City conduit systems and appurtenances damaged by construction. Immediate notification of any damaged existing conduit system, whether occupied or unoccupied, shall be reported to the Construction Administrator and the Communication Maintenance Division, at 791-4634 Monday through Friday between 7:30am to 4:30pm or 791-4830 after hours and weekends.

5. For repairs of occupied City fiber conduit systems, the Contractor shall repair, clean and mandrel test the conduit systems in the presence of a Communication Maintenance representative. The contractor shall install, re-terminate, and test new approved optical fiber cable as directed by the Communication Maintenance representative. The Contractor shall present such representatives with test results, in booklet form and ASCII format, with one licensed version of the original test equipment software, which will allow the City to view the test results as the software was designed. Acceptance of the work shall not occur before all documentation, test results, certification of test results and operation by such representatives has been approved.

6. For repairs of unoccupied City fiber conduit systems, the Contractor shall repair, clean and mandrel test the conduit systems in the presence of a Communication Maintenance representative.

7. All pull boxes/vaults shall be provided with a 5/8" by eight foot ground rod and acorn, driven vertically in the corner with six inches of rod exposed above the top of the drainage rock.

8. The absolute maximum length between pull boxes or vaults shall not exceed 600 feet.

9. Communications conduit between pull boxes/vaults shall have a maximum deflection of 270 degrees.

10. Communications conduit shall be buried a minimum of 36" to the top of the conduit below finish grade.

11. Communications conduit shall be 4" schedule 40 PVC.

Table of Contents

PURPOSE……2
DEFINITIONS……..……3
CITY ARCHITECTURE AND ENGINEERING DIVISION PROJECT MANAGERIAL REQUIREMENTS……..….4
CITY ARCHITECTURE & ENGINEERING DIVISION PROJECT EXECUTION REQUIREMENTS…….6
FOR CITY ARCHITECTURE & ENGINEERING DIVISION END USERS AND CUSTOMERS…...9

CITY ARCHITECTURE & ENGINEERING DIVISION GENERAL ON-SITE DESIGN REQUIREMENTS…… ….10
CITY DEPARTMENT OF TRANSPORTATION PROJECT MANAGERIAL REQUIREMENTS…..12

CITY DEPARTMENT OF TRANSPORTATION PROJECT EXECUTION REQUIREMENTS……..13

PROJECT MANAGERIAL REQUIREMENTS FOR PRIVATE COMMUNICATIONS PROJECTS IN CITY RIGHT-OF-WAY…….18
PROJECT EXECUTION REQUIREMENTS FOR PRIVATE COMMUNICATIONS PROJECTS IN CITY RIGHT-OF WAY……..19
RIO NUEVO PLANNING AND DESIGN OBJECTIVES……...24

RIO NUEVO EXECUTION REQUIREMENTS……..25

RIO NUEVO GENERAL ON-SITE DESIGN GUIDELINES……...……..29
800 MHZ IN-BUILDING AMPLIFICATION SYSTEM REQUIREMENTS…….31
SECTION 17000 – TELECOMMUNICATIONS INFRASTRUCTURE: CSI FORMAT……...34
SECTION 975 – TELECOMMUNICATIONS INFRASTRUCTURE: DOT FORMAT…..……...59

Details

FO 100 – Conduit Installation
FO 300 – Fiber Optic Pullbox
FO 301 – Fiber Optic Vault

12. All bends 45 degrees and greater shall be rigid galvanized steel sweeps 12 times the conduit diameter or 48" radius, double wrapped with 10 mil PVC tape.
13. All conduits not occupied by innerduct and tracer wire shall have unspliced unknotted 2500 pound test 22AWG detectable mule tape installed and secured with 4' slack at each pullbox.

14. All conduit shall be capped and covered with aggregate bedding material, or encased after each day's work to prevent shrinkage and other displacement of the conduit.

15. All materials and appurtenances called out on the plans or required for a complete system shall be new. No used or refurbished items or materials shall be allowed.

16. If there is any conflict among the plans, special provisions, and/or the standard details or specifications of the City of Tucson, or any conflicts within the documents cited above, the higher standard shall apply.

17. Upon project completion, the Contractor shall supply new blueprints and electrically formatted drawings, which reflect all changes and "asbuilt" information

Rio Nuevo General On-Site Design Guidelines

Design. The design of the conduit system shall adhere to TIA/EIA 569B standards, TIA/EIA 758A standards, and shall accommodate the cabling requirements of TIA/EIA 568-B.1, 568-B.2, and 568-B.3 standards.

General Alignment. Where installed along side of other utilities, conduit alignment shall follow the general horizontal alignment of other underground utilities to the fullest extent possible. Utilize joint trenching as much as practicable to reduce the cost associated with trench work. When the alignment of the trenching for the other utilities does not allow for the installation of the City fiber conduit, the conduit shall be installed in a separate trench.

Pull Boxes or Vaults. The absolute maximum length of the conduit between pull boxes or vaults shall not exceed 600 feet. Each pullbox shall be provided with a 5/8" by eight foot ground rod and acorn, driven vertically in the corner with six inches of rod exposed above the top of the drainage rock.

Vertical and Horizontal Alignment. The horizontal and vertical alignment of the conduit system shall be the straightest alignment feasible. The design shall minimize horizontal and vertical drift in the conduit runs. Transitions and bends shall be made using the longest radius possible.

Maximum Bends Between Pulling Points. The sum of all horizontal and vertical bends shall not exceed 270 degrees in any conduit run. Bends with a radius of 500 feet, or greater, may be excluded from this criterion.

Innerduct And Tracer Wire. All 4 inch conduits, except those referred to below as dedicated to Telephone, and CATV shall have 4 (quantity) 1 inch ***smoothwall*** *exterior ribbed interior* innerducts with a continuous 1250 pound test mule tape installed in each innerduct, along with 1 (quantity) 10 AWG green continuous nonspliced copper tracer wire installed in the 4 inch conduit.

Watertight Alibi. Watertight Alibi shall consist of a Quadraplex Duct Plug designed to seal around, organize, and support innerduct where it emerges at the top of all risers, pull boxes, and vaults. Fasteners shall be stainless steel. Plug shall support a minimum of 400 lbs of cable, and shall be removable. Jackmoon or equivalent. No chemical seals will be accepted

Blank Duct Plugs. Blank Duct Plugs shall be installed in each individual innerduct where it emerges at the top of all risers, pull boxes, and vaults. Shall be all plastic construction, corrosion proof, water and air tight to 30 psi. Jackmoon or equivalent.

Standard Conduit Requirements. Unless otherwise approved, all Wide Area network (WAN) conduit shall be 4 inch, schedule 40 PVC conduit buried a minimum of 36" to the top of the conduit below finished grade. The number and size of the HDPE will be selected based on the specifics of the location. Pull boxes shall be installed at the termini of each conduit run. In addition to the (2) 4" schedule 40 PVC conduit for the LAN referenced above, (1) 4" schedule 40 PVC conduit shall be installed for cable television (CATV) facilities, and (1) 4" schedule 40 PVC conduit shall be installed to the Entrance Facility (EF) for Telephone, or the current Long Distance Carrier. Coordinate with the Authority Having Jurisdiction (AHJ) for Telephone and CATV conduit routing, terminations, and project-specific requirements.

Concrete Encasement. All conduits installed under roadways and parking lots on City property shall be encased in Class B (2500psi) concrete with a minimum of 3" cover on all sides. All other conduit runs on City property and City Right of Way shall be given serious consideration as candidates for encasement in concrete. Coordinate with CE, who will balance such considerations as the critical nature of the facility, existence of alternate paths, backup communications paths, and the costs involved. Details and specifications shall reflect actual project conditions.

Peripheral Communications Equipment. All peripheral equipment associated with cable TV (video), phone service (voice), or data (Internet) shall be installed in an unobtrusive, discreet, and disguised manner. If at all possible, such devices shall be buried. Where this is not possible, communication devices must then be either:

- Hidden from public view, or
- Disguised as a natural part of the environment (such as a rock or boulder, natural vegetation, etc.) or building.

Hidden or disguised equipment must not interfere with pedestrian flow or block scenic views, disturbing the aesthetics of the area. Equipment areas should not be fenced unless such fencing is installed to meet Code requirements or standard design practice as applicable to life safety issues; in such cases this fencing shall meet the intent of this paragraph in its aesthetic presentation. The equipment must not emit detectable noises or sounds unless they are placed far enough from pedestrian traffic flow that the noise is undetectable. The telephone number for Graffiti Abatement shall be discreetly posted toward the bottom of the equipment.

It shall be the responsibility of any vendor or provider to periodically check equipment to ensure that it complies with these standards. Noncompliant vendors may be fined or directed to relocate or remove equipment. Obsolete or unused facilities which have not served a customer for 90 days shall be removed in a timely manner. Cost of removal shall be the responsibility of the vendor or provider.

800 Mhz In-Building Amplification System Requirements

With the proliferation of wireless technology, more people have become aware of the intermittent problems associated with cellular telephone coverage, particularly within buildings. Radio systems experience similar problems when used in and around large buildings or structures. City services, primarily public safety, routinely use radios to perform life saving operations. Accommodation must be made for reliable public safety radio coverage inside buildings in order to provide those critical services to the public. There are several significant functions which are enabled by providing uninterrupted radio communications capacity inside buildings and within the city limits.

- Public safety needs – police, fire, medical, and other critical emergency services
- Response to major incidents, disasters
- Event coordination
- City worker efficiency – interoperability among departments and with other agencies

There are various factors affecting the quality of radio signals inside buildings. Internal factors include but are not limited to building mass, size, and composition; location of transmitting and receiving devices within a building; windows with reflective coatings; and presence of elevator shafts. External factors include but are not limited to the composition of barriers in the immediate physical location of buildings; building configuration with respect to natural barriers such as mountain ranges and densely foliated trees; terrain variations; and manmade barriers such as other large buildings.

All Project Managers shall coordinate with the Communications Engineering Division (CE) to determine whether mitigating technologies are to be designed and constructed to the end of assuring adequate radio coverage. The list in the above paragraph is intended to provide the Project Manager with some insight into the considerations involved, and is no substitute for proper coordination with the Communications Engineering Division.

Consideration shall be given to signals generated within building core and transmitted outside of building, signals generated outside of building and received from within building core, and signals transmitted and received point-to-point within a structure. The intent is to provide an in-building coverage area reliability of 95%. The radio frequency signal level at the receiver's input for both talk-out and talk-in shall be adequate to support CM 4(DAQ-3.4) voice quality. The coverage shall be based on using portable units on the hip for receive, and held at five (5) foot level for transmit, in each above-ground level floor of the building. The Channel Performance Criteria, defined in TSB-88, within these areas shall be applied to 95% of the area in the presence of noise and interference.

Radio Coverage and Allowed Systems. For purpose of this section, adequate radio coverage is required, and is defined as circuit merit 3 or better and shall include all of the following:

- A minimum signal strength of -95 dbm available in 95% of the area of each floor of the building or structure when transmitted from the transceiver of the 800 MHz trunked communications system;
- A minimum signal strength of -95 dbm received at the transceiver of the 800 MHz trunked communications system when transmitted from 95% of the area of each floor of the building

- The frequency range which must be supported shall be 821-824 MHz and 866-869 MHz; and
- A 100% reliability factor.

Amplification Systems Allowed. Buildings and structures which cannot support the required level of radio coverage shall be equipped with either (a) an internal multiple antenna or radiating cable system bi-directional 800 MHz amplifiers. Bi-directional amplifiers shall include filters to reduce adjacent frequency interference at least 35 db below the National Public Safety Planning Advisory Committee (NASPAC) band. The filters shall be tuned to 825 MHz and to 870 MHz so that they will be 35 db below the NPSPAC frequencies of 824 MHz and 869 MHz respectively. Other settings may be used provided that they don't attenuate the NPSPAC frequencies and further provided that they are not more than one (1) MHz from the NPSPAC frequencies.

Secondary Fiber Optic System. If there is dark fiber present or can be economically installed from the network to the proposed building (use of existing fiber plant or adequate conduit capacity allowing additional fiber runs to be pulled), then a fiber based secondary system with amplification devices as required may be viable and preferred. This determination will be made by CE. If proposed, a fiber-based system shall integrate to existing network infrastructure and management protocols.

Off-Air Repeater. If dark fiber is not present or too expensive to route to the building, in building coverage can be provided through the use of bi-directional amplifiers and distributed antenna system or leaky feeder radiating cable. Extra RF filtering may be required and engineered into the system design to reject unwanted signals.

Upon completion of each installation, the radio system will be tested to ensure adequate two-way coverage within the facility as specified below:

- Each above-ground level floor of the building shall be divided into a grid of approximately twenty (20) equal areas.
- The test shall be conducted using a portable radio such as the City is using at the time of the test for the intended purpose, talking through the transceiver of the 800 MHz trunked communications system.
  - A spot located approximately in the center of a grid area will be selected for the test.
  - The radio will be keyed to verify two-way communications to and from the outside of the building to and from the 800 MHz truncked radio system.

  - Once the spot has been selected, prospecting for a better spot within the grid area will not be permitted.
- Each grid area will be tested for transmission/reception; minimum signal strength of –95 dbm. If signal strength fails to meet the requirement, the grid area shall be marked as a fail.
- A maximum of two (2) nonadjacent areas will be allowed to fail the test. In the event that three (3) of the areas fail the test, in order to be more statistically accurate, the floor may be divided into forty (40) equal areas.
  - In such event, a maximum of four (4) nonadjacent areas will be allowed to fail the test.
  - After the forty (40)-area test, if the system continues to fail, the system shall be altered to meet the 95% coverage requirement.
- The gain values of all amplifiers shall be measured and the test measurement results provided as part of required system documentation.

Any management system introduced into the core network for the purpose of remote monitoring, configuration or tuning of the proposed RF amplification system must be compatible with, or be non-intrusive to, existing management platforms.

Vendor equipment shall, where applicable, meet the standards set by the IETF, ITU-T, ISO, IEEE, and UL. All Ethernet devices provided by the vendor shall meet at a minimum IEEE 802.3 and 802.3I specifications.

All vendor supplied devices shall accurately process date/time data. Furthermore, when inter-operating with other vendors' products, all vendor supplied devices shall accurately process date/time data interchanged with other vendor’s products to the extent that the other vendor’s products properly conform to year 2000 requirements.

The Contractor shall provide documentation in both machine-readable formats (Microsoft Project, Excel, Word, AutoCAD, and others upon approval by City and in limited volume (two sets) on hardcopy as required herein.

Hardware, firmware, software, and configuration of monitoring shall operate within the stated environment and shall interoperate with the existing network infrastructure and radio communications system without any loss of performance or functionality as defined by the requirements and standards listed to the extent that the other vendor's products properly conform to these requirements and standards.

Section 17000 – Telecommunications Infrastructure: CSI Format

PART 1 - GENERAL

1.1 QUALITY ASSURANCE

A. Materials and equipment shall be the standard products of the manufacturer regularly engaged in the manufacture of the products and shall be of the manufacturer's latest standard product design that has been in satisfactory use for at least 2 years prior to bid opening.

- ANSI C2: 1996 TIA-2; Errata National Electric Safety Code
- ANSI/EIA/TIA-568-B: Commercial Building Telecommunications Cabling Standard
- ANSI/EIA/TIA-569B: Commercial Building Standards for Telecommunications Pathways and Spaces
- ANSI/EIA/TIA 606: Administration Standard for the Telecommunications Infrastructure of Commercial Buildings
- ANSI/EIA/TIA-607: Commercial Building Grounding and Bonding Requirements for Telecommunications
- ANSI/EIA/TIA-758A: Customer Owned Outside Plant Telecommunications Cabling Standard
- NESC/IEEE C2 2002: National Electric Safety Code
- ANSI/NFPA 70: (2002) National Electric Code
- EIA-455-A: Standard Procedure for Fiber Optic Fibers, Cables, Transducers, Sensors Connection and Termination Services, and Other Fiber Optic Components
- EIA-455-13: Visual and Mechanical Inspection of Fibers, Cables, Connectors, and/or Other Fiber Optic Devices
- EIA/TIA-455-60: Measurement of Fiber or Cable Length using an OTDR
- EIA/TIA-455-61: Measurement of Fiber or Cable Attenuation using an OTDR
- EIA/TIA-455-168: Chromatic Dispersion Measurement of Multi-mode Graded-Index and Single-Mode Optical Fibers by Spectral Group Delay Measurement in the Time Domain
- EIA/TIA-472A-D: General Specifications for Fiber Optic Cables
- EIA/TIA-492X: Generic Specifications for Single-/Multi-Mode Fiber Optic Cables
- EIA/TIA-526-X: Optical Power Loss Measurement of Installed Fiber Optic Plant
- EIA/TIA-TSB 67: Performance Specifications for Field Testing of Unshielded Twisted-Pair Cabling Systems
- IEC 874-14: Sectional Specification for Fiber Optic Connector Type SCFOC/2.5
- ISO/IEC IS 11801: Generic Cabling for Customer Premise
- SP-2840A: Measurement of Crosstalk
- TSB-36A: Crosstalk and Attenuation Specifications for Connectors
- TSB-40A: Connectors Specifications
- UL 444 & 13: Adopted Tests and Follow-Up Service Requirements for the Optional Qualification of 100-Ohm Twisted Pair

- AF-PHY-0015.000: ATM Forum Standard for 155Mb/s ATM over Category Five
- BICSI: Current version of the Telecommunication Distribution Methods Manual.

B. The installation of the underground conduit system shall adhere to TIA/EIA 569B standards, TIA/EIA 758A standards, as well as the latest editions of applicable EIA, TIA, ANSI, ASTM Standards and the Pima County/City of Tucson Standard Specifications and Details for Public Improvements. In the event of a conflict among any of the above and the project specifications, the higher standard shall apply.

PART 2 – PRODUCTS AND MATERIALS

2.1 GENERAL

A. Materials shall be new, standard in every way, and satisfactory to the Designer.

2.2 CABLING

A. All outside plant (OSP) cable shall be gel-filled unless pre-approved by Communications Maintenance.

B. All horizontal copper cabling, including workstation cabling, shall be plenum rated, if the environment requires it. All optical fiber cable, riser copper cable, and innerduct shall be plenum rated, if the environment requires it.

C. Copper

1. **Inter-Building Cable.** Building entrance and building exit terminals shall be terminated on protectors described elsewhere. Copper cable shall be AWG 24 solid copper conductors insulated with gel filling rated PE-89 or better. Cable shall have a maximum average DC resistance of 8.7 Ω/Km, maximum average DC resistance unbalanced at 1.5%. Mutual capacitance at 1khz shall be 5.15 pf/Km with a maximum unbalanced capacitance (pair to ground) of 57.4 pf/Km. Cable shall meet or exceed 10BASE-T testing requirements for attenuation, impedance, and worst pair loss (NEXT).

2. **Riser Cable.** Riser cable between TC's shall be NEC Article 800 Type CMP multi-pair AWG24 rated for Category Three operation.

3. **Horizontal Cable.**

   a. **Data.** Copper station cable between the station jack and the distribution blocks shall be ISO/IEC 11801 'D' or EIA/TIA 568-B Category Five Extended.
      - 4 pair AWG24 rated for up to 350 MHz operation
      - Powersum NEXT minimum 40db @ 100mhz

- NEXT minimum 42 db @ 100 MHz
- Attenuation 0,4 db @ 100 MHz
- Return Loss 18db @ 100 MHz
- ACR balanced across all frequencies 1-160mhz

b. **Voice.** 25 Pair AWG24 rated for up to 20 MHz operation

c. **Workstation cable**. All workstation cable shall be Plenum cable 4X0 construction. All cable shall be as manufactured by an ISO 9002 compliant manufacturer.

4. **Coax.** Coaxial cable shall be application specific per the manufacturers guidelines.

5. **Grounding Conductor.** Grounding conductors shall be copper and meet all requirements of the National Electrical Code articles 250 and 800.

D. Fiber Optic Cable

1. Intra-Building

Fiber optic cable shall be suitable for riser, tray and indoor general purposes. Cable shall be Applicable Flame Test UL 1666 listed OFNR, or OFNP, as applicable. Cable shall be dielectric and of tight buffer construction. Finished cables shall conform to the applicable performance requirements of Table 8-6 and 8-7 in the insulated Cable Engineers Association, Inc. (ICEA) Standard for Fiber Optic Premises Distribution Cable (ICEA S-83-596).

2. Inter-Building

a. Fiber optic cable shall be suitable for Duct tray and outdoor/indoor general purposes. Cable shall be RUS listed 7CFR1755.900, ANSI/CEA S-87-640-1992 as applicable, Cable shall be dielectric and of loose tube construction.

b. Fiber Optic Backbone Cable shall be Multi-mode and Single-mode optical fibers contained in a cable.

E. Fiber Characteristics

1. Multi-Mode

a. Fiber shall be graded index optical glass meeting EIA/TIA-492AAAA-1989
b. Core diameter, shall be 62.5 ± 3.0 μm.
c. Cladding diameter shall be 125.0 ± 2.0 μm.

d. Core-to-cladding offset shall be ≥ 3.0 μm.
e. Cladding non-circularity: <2.0 % Defined as: (Minimum Cladding Diameter)
f. (Maximum Cladding Diameter) x 100
g. Core non-circularity: ≤ 5 % Defined as: (Minimum Core Diameter)
h. (Maximum Core Diameter) x 100
i. Attenuation Uniformity: No point discontinuity greater than 0.20 dB at either 850 nm or 1300 nm
j. Numerical Aperture: 0.275 ± 0.015

2. Single-Mode

a. Fiber shall be dispersion unshifted optical glass.
b. The core diameter, if an addressable parameter, shall be 8.5 μm. If the core diameter is not addressed, then the mode field diameter shall be 10 μm plus or minus 1 μm.
c. The cladding diameter shall be 125 μm ± 1.0 μm.
d. The core-cladding offset shall be ≤ 0.8 μm.
e. Cladding non-circularity: < 1.0 % Defined as:(Minimum Cladding Diameter)
f. (1-Maximum Cladding Diameter) x 100.
g. The attenuation Uniformity shall have no point discontinuity greater than 0.10 dB at either 1310 nm or 1550 nm.
h. Attenuation at the Water Peak: The attenuation at 1383 ± 3 nm shall not exceed 2.1 dB/km.
i. Cutoff Wavelength: The cabled fiber cutoff wavelength (λccf) shall be < 1260 nm.
j. Mode-Field Diameter: 9.30 ± 0.50 μm at 1310 nm, 10.50 ± 1.00 μm at 1550 nm.
k. Zero Dispersion Slope (So): ≤ 0.092 ps/(nm2•km).
l. Fiber Polarization Mode Dispersion (PMD): ≤ 0.5 ps√km.
m. The maximum dispersion shall be ≤ 3.2 ps/(nm•km) from 1285 nm to 1330 nm and shall be < 18ps/(nm•km) at 1550 nm.

3. Attenuation

a. **Multi-mode:** The optional attenuation of each Multi-mode optical fiber in the reeled cable shall be not greater than 3.0/0.7 dB/km within a peak emissive region of 850/1300 nm. The attenuation shall be measured on completed cable reel; length, and normalized linearly to 1 km. The measurement method shall be in accordance with EIA 455-46A or EIA 455-53A

b. **Single-mode:** The optical attenuation of each Single-mode optical fiber in the reeled cable shall be not greater than .4/. 3 dB/km within a peak emissive region of 1310/1550 nm. The attenuation shall be measured on completed cable reel length, and normalized linearly to 1 km. The measurement method shall be in accordance with EIA 455-46A or EIA 455-53A.

Purpose

In order to meet the City of Tucson's (City's) current and future communications requirements, a comprehensive Wide Area Network (WAN) is being developed. This network will provide connection to all existing and new city buildings of significance. All city buildings or campus communication infrastructures (intrabuilding and interbuilding data, voice, and video services), known as Local Area Networks (LAN) will be connected to the WAN.

To facilitate the implementation of this system in an economic and community responsive manner, portions of the system will be constructed in association with other public improvement projects being undertaken by various City Departments. This practice can provide a reduction in the initial capital costs of the system. Specifically, by integrating the installation of the communications system with other projects, the adverse impact of this installation will be mitigated by reducing the number of construction projects occurring within the City's Right-of-Way.

Such developments as Rio Nuevo are in need of clearly defined communications requirements. Implementation will be initiated during the planning stage, carried through all phases of conceptual development, and sustained through execution.

The City is also involved in efforts to explore the advantages of regional partnering with other governmental and educational entities. Within this context, such entities are encouraged to make use of the guidelines herein, to the end of a consistent regional application.

This document is intended to set forth the basic criteria for the WAN and LAN, and to address the pertinent aspects of its design, construction, and testing. Specific requirements have been established for City Architecture & Engineering projects on City real property, for City Engineering projects in City Right-of-Way, for developments such as Rio Nuevo, and for in-building radio coverage. Requirements have also been identified for non-City entities working in City Right-of-Way in the sections entitled "Project Managerial Requirements for Private Projects in City Right-of-Way" and "Project Execution Requirements for Private Projects in City Right-of Way."

This is a document which is anticipated to be updated annually. If any portion of this document has conflicts or errors, is subject to misinterpretation, or is not workable or constructable, please bring it to the attention of the City of Tucson Communications Engineering (CE) Division.

4. Bandwidth

   Multi-mode. Optic fiber within the cable (reeled) shall have its bandwidth measured between 3 dB optical power points, as compared to a reference signal, from a light source with a peak optical emissive region of 850 to 1300 nm. The effective system bandwidth of at least 1 GHz-km is required and minimum normalized bandwidth shall be ≥ 160/500 MHz/km at 850/1300 mm. The effective system bandwidth is the bandwidth length product calculated from the measured bandwidth multiplied by the cable length raised to the negative length dependence factor (or gamma factor). Gamma shall be in the range of 0.85 to 0.9. The bandwidth measurement shall be in accordance with EIA 455-54A FOTP-30 EIA 455-51 time domain.

5. **Dispersion.** The maximum dispersion shall be ≤ 3.2 ps/(nm•km) from 1285 nm to 1330 nm and shall be < 18 ps/(nm•km) at 1550 nm.

6. All optical fibers shall be proof tested by the fiber manufacturer to a minimum lad of 0.7 GN/m2 (100 kpsi).

7. All fibers in the cable must be usable fibers and meet required specifications.

8. Contractor shall provide written certification from the manufacturer that all fiber optic cable contain no splices in the glass and that the fiber was manufactured from a single piece of glass as provided by the original manufacturer. Contractor shall provide manufacturer test results in the form of a cable data report, containing attenuation at all applicable wavelengths, and refractive indices, for all pairs.

9. Non-Plenum Applications – Applicable Flame Test: UL 1581 and UL 1666.

10. Plenum Applications – Applicable Flame Test: UL910 (NFPA 262-1994).

11. Cable manufacturer shall be ISO 9001 registered.

2.3 CONDUITS - ABOVE GRADE

A. Minimum conduit size shall be 3/4 inch.

B. Conduits 1-1/2 inches and smaller shall be steel electrical metallic tubing (EMT). EMT shall be galvanized on the outside and coated on the inside with a smooth, hard finish of lacquer, varnish or enamel. EMT shall comply with UL Standard UL797 and ANSI C80-1. EMT couplings and box connectors for EMT shall be of the throated steel compression gland type.

C. Conduits 2 inches and larger shall be galvanized rigid steel. RGS conduit shall be hot-dipped, galvanized steel with zinc coating or corrosion resistant lacquer on the inside, and

shall comply with Underwriters' Laboratories Standard UL6 and ANSI C80-1. Fittings shall be threaded, water and concrete-tight.

D. All conduits subject to mechanical injury or exposed in wet locations shall be rigid galvanized steel.

E. Raceway shall be either Wiremold 6000, 3000, 700 series metallic, or Composite Plastic raceway including all components intended for a proper professional installation as required. Outlet Boxes, where required, shall be metallic or plastic and of a design for use with the raceway. All raceways must comply with all 568B standards, specifically the minimum 1-inch bend radius. All 90-degree turns in raceway must be provided with the appropriate junction to ensure non-violation of bend radius. All raceway shall be painted to match its environs.

2.4 CONDUIT SYSTEM – UNDERGROUND

2.4.1 Polyvinyl Chloride (PVC) Conduit. All conduit shall be listed by UL and conform to NEC standards. Unless otherwise specified, all conduit to be installed underground or installed in concrete structures shall be 4-inch diameter, rigid Polyvinyl Chloride (PVC) Non-Metallic Conduit. The PVC conduit shall be schedule 40, heavy wall, sunlight resistant, manufactured from high impact material and shall be rated for use at 90 degrees centigrade. The conduit shall meet the specifications of UL 651 and NEMA TC-2, and furnished with interface fit bell ends. Fittings shall be schedule 40 PVC, meeting the specifications of NEMA TC-3 and UL 514.

Conduit with Integral Innerduct shall be accepted as an alternate to the 4" PVC, with innerduct and rigid steel bends installed separately. Conduit with Integral Innerduct shall be of schedule 40 PVC in modular, slip fit lengths. Shall have pre-lubricated innerducts with internal spacers and which expand and contract at the same rate as the outerduct. Shall have anti-reversing gaskets, and an o-ring gasket at bell base. Shall have inward tapering holes on coupling body for easy assignment, printed indication such as "Install Print Side Up" to keep system straight during installation, and marked innerduct and marked hole on coupling body to insure proper innerduct alignment and allow crews to work from opposite directions. Bends shall be flexible and engineered to be cut-through resistant. Carlon Telecom Systems Multi-Gard or equivalent. All integral innerducts shall have a unspliced unknotted 1250 pound test detectable mule tape installed.

2.4.2 Solvent Cement for Polyvinyl Chloride (PVC) Conduit and Couplings. All solvent cement shall meet the requirements of ASTM D 2564. The cement shall be of a medium or heavy-bodied cement capable of making watertight joints. The cement and primer shall be of a type recommended by the manufacturer of the conduit.

2.4.3 Rigid Steel Conduit Sweeps. Conduit sweeps shall be listed by UL and conform to NEC standards. The bends shall be steel, hot dipped zinc coated, meeting the requirements of UL 6 and ANSI C80.1, and shall carry the Underwriters Laboratory label. Non-thread couplings shall not be used. Sweeps shall have a minimum radius of 12 times the nominal

diameter of the conduit. Steel conduit sweeps shall have a factory applied 40 mil PVC coating or be doubled (half overlap) wrapped with a 10 mil PVC plastic tape specifically manufactured for corrosion protection of metallic conduits installed below grade.

2.4.4 Flexible Conduit. When specifically indicated on the plans and where approved by the engineer, flexible solid wall direct bury conduit may be used. The conduit shall be manufactured of Polyvinyl Chloride (PVC), or Polyethylene (PE) plastic. The conduit shall be specifically manufactured for direct buried fiber optic raceway systems and shall be Carlon "Optic-Gard PE" conduit, or approved equal. Flexible conduit shall not be utilized for making bends in conduit system. Connection between the flexible conduit and conduits of other materials shall be made with a watertight transition coupling manufactured for the specific type of material.

2.4.5 Plastic Conduit Spacers. Spacers shall be constructed of Polyvinyl Chloride (PVC) or other non-metallic material. The spacers shall be vertical and horizontal interlocking and provide a minimum of 3-inch clearance between conduits. Base spacers shall be provided with a wide base plate to provide solid support on the bottom of the trench. The base spacers shall provide for a minimum clearance of 3 inches between the bottom of the trench and the conduit. The spacers shall be tied down to prevent displacement during concrete encasement.

2.4.6 Aggregate Bedding Material. Aggregate material for bedding shall meet the gradation indicated in the specifications and on the drawings for the subject project. The plasticity index shall also conform to the specifications under which the subject project is designed and constructed.

2.4.7 Detectable Warning Tape. An electronically detectable 6" Fiber Warning tape shall be installed 18" above the conduit. Tape shall be acid and alkali-resistant polyethylene film, 6 inches wide with a minimum thickness of 0.004 inch. The tape shall have a minimum strength of 7500 PSI lengthwise and 1,500 PSI crosswise. The tape shall be manufactured with integral wires, foil backing, or other means to enable its detection by a metal detector when the tape is buried up to a depth of 3 feet deep. The tape shall be orange in color and have the following continuous inscription, "CAUTION - FIBER OPTIC CABLE BURIED BELOW". The inscription shall be 2-inch black letters.

2.4.8 Backfill Material. The backfill material shall conform to that of the subject project.

2.4.9 Tracer Wire. The cable and wire shall be listed by UL and conform to NEC standards. The wire shall be stranded continuous unspliced 10 AWG CU, rated for 600 volts, and shall be type THW or XHHW. The color of the wire shall be green. The wire shall be of the required length to eliminate all splices within the conduit.

2.4.10 Electronic Marker. An electronic marker, 3M model 1255 mini-marker shall be placed by the Contractor at the location of any capped conduit not in a building or a pullbox.

2.4.11 Pull Boxes. Communications pull boxes shall be molded high density polyethylene base and polymer concrete cover. The pullbox shall be gray in color. The pullbox shall have a bolt-down cover secured by a minimum of two (2) recessed hex-head bolts. The pullbox cover shall have the word "COMMUNICATIONS" written on it in permanent raised, stamped or engraved lettering. Pull boxes shall be open base. The pullbox base shall have two knockouts on each end and side Pull boxes may be extended by means of an extension or spacer. Contractor shall provide all necessary collars, extensions, hardware, sealant, and conduit caps. All conduit entrances shall be sealed. The assigned pullbox number shall be painted on the box at the time of installation. Chipped, cracked, or otherwise damaged boxes and covers will not be accepted.

2.4.12 Vaults. Communications vaults shall be UL listed. Vault base shall be pre-cast concrete with a minimum thickness of 4". Vault cover shall be pre-cast concrete with a minimum 36" x 36" galvanized steel locking lid secured by a minimum of one (1) recessed hex-head bolt. The cover lid shall have "COMMUNICATIONS" written on it in permanent raised, stamped or welded lettering. The vault base and vault cover shall be gasketed and weather proof. Vaults shall have a minimum outside dimension of 48" long by 48" wide by 50" high with a minimum thickness of 4". The base shall have one (1) 8" diameter by 4" deep sump hole knockout in the floor. The base interior shall have a minimum of one (1) 2 ½" diameter ground rod knockout in the floor , at a corner; the base interior shall have four (4) 7/8" diameter pulling irons, one centered on each side. The base exterior walls shall have four (4) 36" "C" channels precast in the sides, one on each side; the base exterior shall have four (4) 18" x 18" knockouts, one on each side; and, the base exterior shall have sixteen (16) 4 1/2" diameter knockouts for 4" conduit entrances, four on each side. Contractor shall provide all necessary collars, extensions, hardware, sealant, and conduit caps. All conduit entrances shall be sealed. The assigned box number shall be painted on the box at the time of installation. Chipped, cracked, or otherwise damaged boxes and covers will not be accepted.

2.4.13 Portland Cement Concrete. Concrete shall be Class B meeting the requirements of Section 1006 of the Pima County/City of Tucson Standard Specifications for Public Improvements.

2.4.14 Innerduct. Innerduct shall be PVC and constructed of a smooth walled exterior and a ribbed interior with 1250 pound test muletape installed. No corrugated innerduct will be accepted.

2.4.15 Watertight Alibi. Watertight Alibi shall consist of a Quadraplex Duct Plug designed to seal around, organize, and support innerduct where it emerges at the top of all risers, pull boxes, and vaults. Fasteners shall be stainless steel. Plug shall support a minimum of 400 lbs of cable, and shall be removable. Jackmoon or equivalent. No chemical seals will be accepted.

2.4.16 Blank Duct Plugs. Blank Duct Plugs shall be installed in each individual innerduct where it emerges at the top of all risers, pull boxes, and vaults. Shall be all plastic construction, corrosion proof, water and air tight to 30 psi. Jackmoon or equivalent.

2.5 INFORMATION OUTLETS

A. Standard Information Outlets shall be EIA/TIA 568B rated for up to 155mhz applications. Information Outlets shall Uniprise UNJ500 series or equal for Wall, Modular Furniture, and other appropriate applications. Black, White, Ivory, Grey with M20AP-246 Blank. The outlet labeled #1 is black, #2 is ivory, #3 is gray, and #4 is white.

B. Multi-media Outlets shall be a combination of the Standard Information Outlet and duplex SC optical outlets

C. Wall Phone Outlets shall be Lucent 630B stainless steel or approved equal.

D. New wall work requires a 4 inch square, deep metal box with a single gang plaster ring, for a four port outlet. A double gang plaster ring shall be installed for an eight port outlet. Surface mounted application shall be weather proof deep Bell boxes. Size of conduits entering all boxes shall conform to the standards with a maximum fill not exceeding 40%.

E. Each Mechanical Room in a COT facility shall be provided with an information outlet dedicated to the Energy Management Control System (EMCS).

2.6 FACE PLATES

A. Standard Information Outlet shall be Commscope UNF-FM-4P, color by architect.
B. Multi-Media faceplate shall be Panduit CFPE10 with CFS2IW. Use appropriate Panduit outlets CJ588SBXX for copper termination.

C. CATV shall be stainless steel with bulkhead .

2.7 WIRE MANAGEMENT

A. Wire management panels shall be of horizontal plastic rings mounted above and below the patch panels on the 19” rack. CPI 11752-219 & CPI 11753-219 or equal, placed on both the front and back sides of the rack.

B. Vertical wire management shall be dual channel metallic CPI 11729-503 or equal, placed between all racks.

C. Cable tray shall be steel open ladder 12”. Cable tray shall be supported each 5’, minimum. Cable tray and all associated mounting equipment shall be clear finished.

D. Fiber jumpers on framework, typically running vertically, shall be protected by finger stock raceway, Panduit or equivalent. Fiber jumpers on racks, typically running horizontally, shall be in suitable fiber cable trough, including elbows with their inner curve swept, couplings, down spouts, and cover.

2.8 RACKS

A. Floor Racks shall be UL listed 7’ x 19” self-supporting EIA channel clear finished with mounting holes on both sides.

B. Wall Racks shall be 18” deep UL listed 19” wide clear finished and sized appropriately for the devices intended for termination on these racks. All wall mounted racks shall be field cut to size to meet the environment.

C. Contractor shall ensure a minimum of 24 Single-rack positions available after installation or equipment.

F. Each rack shall have one Sub System Grounding Bus Bar (SSGB) installed at the top rack position. The SSGB shall be bonded to the Telecommunications Main Grounding Bus Bar (TMGB), referenced in Part 2.17 below, by one of the following methods: bonding the SSGB to a ground bus conductor using a irreversible compression tap connector is preferred; bonding the SSGB directly (home run) to the TMGB is acceptable.

G. Each rack shall have one minimum 6 outlet power strip CPI or equivilent with minimum 10' power cord installed at the middle rack position

2.9 BACKBOARDS

Backboards shall be a minimum ¾” AC plywood, fire treated finished ‘A’ side out.

2.10 PATCH PANELS

Data: Patch Panels shall be Uniprise RFE series or approved equal 24 port 19” rack mountable black aluminum.
Voice (Analog) shall be 24 port 1U RJ21<>RJ45 with pins 4,5 active

2.11 VOICE TERMINATION

Voice Termination blocks shall be Lucent or Siemons S110AW2-100 and S110AW2-300 including all S110C-4 and S110C-5 clips, S110A2 cable managers, S110-LBL-5 designation strips, and S110-HLDR label holders or Lucent equivalent. 25 pair termination shall punch down directly to riser blocks. Coordinate with City of Tucson Telecommunications Division before terminating pairs.

2.12 PROTECTOR BLOCKS

Protector blocks shall be 188 type Multipair Protector Panel with 110 distribution system, separate splice chamber, and cover.

2.13 PROTECTORS

Protectors shall be 4B1-EW five pin protectors with Heat Coil. Protectors shall have a DC Voltage breakdown within 265-425V @ 2kV/sec, Surge Breakdown within 200-500V @ 100V/sec, and a minimum 300A (10 x 1000 μsec waveform): >50 operations

2.14 WIRE HANGERS

Wire Hangers shall be Erico CAT series with all accoutrements or equal.

2.15 LABELS

Labels shall be white metallic or Polyofelin with ¼" tall lettering computer generated.

2.16 VELCRO

Velcro is the only material permitted for bundling and securing of cable.

2.17 TELECOMMUNICATIONS GROUND BUS BAR:

A. The Telecommunications Master Grounding Bus Bar (TMGB) shall be wall mounted 1/4"x4"x20" solid copper on 4" standoffs with insulators.

B. The Sub System Grounding Bus Bar (SSGB) shall be Vertical rack mounted 1/8" solid copper with insulators.

2.18 CONNECTORS

A. All copper connectors shall be Uniprise UNJ500 series style in four colors: #1 Black, #2 Ivory, #3 Gray, and #4 White. All shall be wired per T568B pinout configuration.

B. Fiber connectors

   1. Workstation connectors shall be duplex SC, ceramic tip, intended for field termination. Fiber optic connectors shall be epoxy cured or hot cured. Pre-polished crimp style connectors are unacceptable.

   2. TC Workstation/Backbone connectors shall be of the 'SC' variety, ceramic tip, intended for field termination. Fiber optic connectors shall be epoxy cured or hot cured. Pre-polished crimp style connectors are unacceptable.

2.19 FIBER OPTIC SLEEVES

Fiber Optic sleeves shall be suitable for connectivity of bundled duplex, or duplex fiber jumpers.

2.20 FIBER OPTIC WARNING LABELS

Labels shall attach or affix to the Fiber cable or its path or any associated junction or pull boxes. Fiber optic warning labels shall denote the statement, "WARNING, Fiber Optic Cable" at a minimum and shall be clearly visible at a distance of 20'.

2.21 FIBER OPTIC DISTRIBUTION SHELVES

Fiber optic distribution shelves shall be for wall mounting and floor mounted racking, of an adequate size to properly terminate Backbone and all other fibers. The shelf shall include all necessary buffering/breakout, clamping, blocking and ancillary hardware to terminate all fibers. Acceptable Manufacturers are Uniprise RFE series, or Corning CCH,ADC,FL 2000 series, or approved other.

2.22 JUMPERS

A. Jumpers shall be of the same certified transmission rating as horizontal cable for the intended circuit.

B. Copper: Jumpers shall be yellow for IO port one, Red for IO port two, Green for IO port three and Blue for IO port four. Provide two workstation jumpers for each information outlet, one 7' and one 15' in length.

C. Fiber: Fiber jumpers shall be duplex SC 2.0 meters in length meeting the same requirements for all other fiber cable. Provide two each duplex jumpers for each 12 strands of multi-mode backbone cable installed and two each duplex jumpers for each 6 strands on single-mode cable installed.

PART 3 – EXECUTION

3.1 TELECOMMUNICATIONS ROOMS

A. BISCI Definitions

1. Telecommunications Room (TR) is defined by BICSI as an enclosed space for housing telecommunications equipment, cable terminations, and cross-connects. This room is the recognized cross-connect between the backbone cable and horizontal cabling.

2. Horizontal Cross-connect (HC) is defined as a group of connectors, such as patch panel or punch-down block, that allows equipment and backbone cabling to be cross-connected with patch cords or jumpers.

3. Entrance Facility (EF) is defined as an entrance to a building for both public and private network service cables, including antennae, and including the entrance point at the building wall and continuing to the entrance room or space.

B. Each Telecommunications Room shall be an enclosed room dedicated to telephone and data communications equipment and termination hardware. This room shall be a minimum of ten feet by twenty feet to service up to 144 workstation drops and shall be temperature controlled to a range of 64-75 degrees F based on a 24 hr per day, 365 day per year heat load of 3000 watts. An alarm circuit shall be provided and connected to the Energy Management Control System located in the physical plant or mechanical room that activates if temperature exceeds 85 degrees F. If the facility does not have an EMCS, a mutable audible alarm must sound in a 24 hour occupied area of the building. If equipped with a local air conditioner, a dedicated circuit shall feed it.

C. At a minimum, one 20 amp dedicated electrical circuits with dedicated neutrals shall be provided as described below.

1. One quadraplex electrical outlets shall be installed in a surface mounted four inch square box at the base of each. rack.In the case of wall mounted racks, the quadraplex electrical outlets shall be installed in the wall behind and below the rack. Conduit to the rack may not be routed across the floor so as to create a trip hazard or impede use of any mounting holes or equipment locations in rack.

2. Additional 20 amp quadraplex electrical outlets shall be installed in four square boxes, 18 inches center above the finished floor on the walls where needed to serve other equipment and testing equipment

D. All walls of all of the communications rooms shall be lined with 3/4” AC fire treated plywood, with the “A” side exposed. The plywood is not to be painted.

E. At a minimum, a 12 inch ladderway shall be used to support cable above room walls and racks.

F. Switched lighting shall be supplied and shall produce a minimum of 50 foot-candles at the rack location measured 3 foot above finished floor.

G. Racking shall be used to house termination patch panels. Racks shall be 7 foot by 19 inch aluminum, clear finish, EIA/TIA standard floor mounted with 2 sided hole pattern. Racks shall meet 310 d standard. If wall mounting is specified, a minimum of 12 inches of bracket spacing to wall is required and bottom of rack must sit squarely on floor. All panel racks shall be SAE 12-24 screw pitch.

H. Two Uniprise UNPMM 24P or approved equal patch panels are required for every 12 drops. The black, ivory, gray and white workstation outlets shall be terminated on the patch panels in the rack in order from lowest to highest workstation number. Each drop will be a column on the two patch panels which will be configured left to right from the patch side as follows.

1. The Contractor shall terminate the **black** Uniprise UNJ500, of the station information outlet starting at the **upper leftmost position** of the **first patch panel**, and continue left to right.

2. The Contractor shall terminate the **ivory** Uniprise UNJ500 of the station information outlet starting at the **lower leftmost position** of the **first patch panel**, and continue left to right.

3. The Contractor shall terminate the **gray** Uniprise UNJ500 of the station information outlet starting at the **upper leftmost position** of the **second patch panel**, and continue left to right of the patch panel in identical fashion.

4. The Contractor shall terminate the **White** Uniprise UNJ500 of the station information outlet starting at the **Lower leftmost position** of the **second patch panel**, and continue left to right of the patch panel in identical fashion.

.

5. The Contractor shall supply and install one (1) wire management panel both front and back for every 12 information outlets, and not less than two panels per rack. Such wire management panels shall be of horizontal plastic rings mounted on a two and four position 19” rack panel CPI 11752-219 and CPI 11753-219 or equal. All patch panels and horizontal wire management shall be mounted consecutively, to insure that there are no gaps between panels. Vertical wire management shall be dual channel metallic CPI 11729-503 or equal, placed between all racks.

Definitions

Building Industry Consulting Service International (BICSI): An organization of telecommunications professionals dedicated to the development of technical manuals and standards, training, and registration manuals.

Local Area Network (LAN): A geographically limited data communications system for a specific user group consisting of a group of interconnected group of computers sharing applications, data, and peripheral devices such as printers and CD-ROM drives intended for the local transport of data, video, and voice. Such a system can serve either a single building or a campus environment.

Registered Communications Distribution Designer (RCDD): The title awarded to BICSI members who demonstrate expertise in the design, integration, and implementation of telecommunications (voice, data, video, audio, and other low-voltage control) transport systems and their related infrastructure components. This designation has become a de facto certification for professional competence within the telecommunications industry.

Communications Engineering (CE): A Division of the City of Tucson Department of Information Technology which has been assigned as one of its principal missions the oversight, planning, coordination and execution of a comprehensive City-wide communications master plan.

Wide Area Network (WAN): An internetwork that uses telecommunications links to connect geographically distant LANs. Tucson's WAN is comprised of City fiber run in its Right-of-Way.

I. Analog Voice termination shall be configured as follows.

1. At the CLEC the Contractor shall terminate the **Riser Cable** to the Riser Field of the 110AW block starting at the lower leftmost position of the block continuing left to right, and downward.

2. The Contractor shall utilize the 110-C4 for all station field terminations **except** the 6th station position on each row. The Contractor shall utilize the 110-C5 for the 6th station position on each row.

3. The contractor shall adhere to 100MHz cabling guideline specifying proper cable installation.

4. The contractor shall connectorize the riser calbe with a suitable RJ21 connector at the Owners end. All building riser cable shall utilize RJ21<>rj21 connectivity

J. Each Telecommunications Room, serving as a Horizontal Cross-connect,shall have a minimum of 24/24 strands of SM/MM fiber per City of Tucson Specifications between it and the Entrance Facility. A minimum 50 foot service loop shall be left at each end. Service loop shall be coiled neatly and secured with D-rings to main board observing the minimum bend radius in manufacturer's specifications.

K. Data jacks - #1 (black), #2 (ivory), #3 (gray) #4, (white) are connected to the data punch panel serving the area and are available for data traffic up to 100 MHz.

L. Each Telecommunications Room shall be supplied with an equipment grounding conductor meeting the requirements of NEC Article 250 and NEC Article 800.

M. Each Telecommunications Room shall have a TMGB installed. The TMGB is typically placed 16"" Above Finished Floor (AFF), below, and with direct access to the ladderway.

N. Each Telecommunications Room shall be provided an equipment grounding conductor meeting the requirements of National Electrical Code Article 250 and 800. The equipment grounding conductor point of entry shall be local to, and terminate directly to the TMGB. The equipment grounding conductor shall be bonded to the MGBB using a 2 hole irreversible compression connector. The equipment grounding conductor shall not utilize the ladderway as a path to the TMGB.

3.2 CABLING

A. Copper

1. All workstations shall have four, four-pair Category Five extended cables with 4X0 construction. Cable, routing, support systems, and termination all must meet TIA/EIA 568B LEVEL III, TIA/EIA 569B and SRL testing requirements. All cable shall run parallel and perpendicular to the supporting steel structure. The cabling shall be supported at no more than 5 foot intervals. Cabling and support systems shall not use any part of the grid ceiling for support. When cabling traverses a part of the building framework or appurtenances, shall be supported at least 15 cm above the drop ceiling, with Category 5 J hook or other approved device. Cables shall be bundled using Velcro straps. The use of cinch type ties is unacceptable.

2. Provide two workstation jumpers for each information outlet port installed.

B. Fiber

Provide 2 strands of Multi-mode and 2 strands of Single-mode plenum Fiber Optic cable at each Conference room.

3.3 CABLE TESTING

A. All tests must be witnessed by a representative of the City of Tucson Communications Maintenance Division.

B. Test Reports

1. Contractor shall supply Test reports, in both booklet form and electronic format, showing all field tests performed to adjust each component and all field test performed to prove compliance with the specified performance criteria, upon completion of testing of the installed system.

2. Contractor shall supply one licensed copy of test equipment software which provides a means for viewing both copper and fiber test results in the format that the original test equipment was designed, suitable for running in a DOS or Windows environment.

3. Any discrepancies noted during the test shall be corrected and those tests shall be rerun.

C. Test Equipment

1. Copper

   a. Test equipment shall be suitable for certifying all EIA/TIA 568B Draft 7 250 MHz and up to 300 MHz specifications including but not limited to, power sum attenuation across pairs, attenuation, near end cross talk (NEXT), far end cross talk (FEXT) including worst-case value and frequency, wire/line mapping, split-pairs, shorts, opens, reversals, length, impedance, loop resistance, capacitance, and ambient noise spread across various frequencies and Level III compliance.

   b. Test equipment shall be a device providing for active sweep testing of Digital Signal Processing (DSP) of circuits. Contractor shall provide proof of recent factory calibration, (within the previous 12 months) of all test equipment. Copper test equipment shall be Level III+ Compliant and Draft 6 Compliant or most recent draft compliant.

2. Optical

   Optical test equipment shall be suitable for measuring the attenuation and optical characteristics of the installed Fiber Optic plant. Optical test shall include but not limited to End to End attenuation via power loss; Optical Time Domain Reflectometer (OTDR), optical loss of all connectors, microbending, and conformance to optical specifications; and a power meter capable of performing end-to-end loss test on SM/MM fiber. Optical characteristic testing shall be an average of not less than 15 seconds of active measurement. Contractor shall provide proof of factory calibration within the previous 12 months of all test equipment.

D. Testing Procedures

1. Factory Certification Test: The Contractor shall supply factory reeling test, which shows compliance with all fiber cable optical, attenuation and bandwidth criteria.

2. Copper Cable Testing

   All cable shall be tested and certified for all EIA/TIA 568B Draft 7 250 MHz and up to 300 MHz specifications The contractor shall test all cabling for the *permanent link*, as follows unless otherwise noted; riser cable between closets need only be certified to Category Three parameters. Test equipment, which certifies the cable in twenty-five pair bundles, is acceptable for use on the riser cable only.

3. Optical Fiber Testing

   a. Fiber Optic Cabling tests shall be performed on the completed end-to-end spans that include a near-end pre-connectorized single-fiber cable assembly, outside plant or riser as specified, and a far-end pre-connectorized single-fiber cable assembly. Two optical tests shall be performed as follows.

   b. The first test shall be the OTDR Test. The following acceptance tests shall be performed for each fiber greater than 100m and all backbone cable regardless in the completed cable length. Wave lengths [850], [1300], [1310], and [1550], shall be tested.

      - The OTDR tests will show any irregularities, such as discontinuities, micro-bending, Improper splices, for the cable span under test.
      - Hardcopy fiber signature records shall be obtained from the OTDR for each fiber in each span and shall be included in the test results.
      - The OTDR test shall be measured in both directions.
      - A reference length of fiber, 100 m minimum, used as the delay line shall be placed before the new end connector and after the far end patch panel connectors for inspection of connector signature.

   c. The second test shall be the Attenuation Test: End-to-end attenuation measurement shall be made on all fibers, in both directions, using a [850] [1300] [1310] [1550] nanometer light source at one end and the optical power meter in the other end. This test will be used to verify that the cable system attenuation requirements are met.

   d. The measurement method shall be in accordance with EIA 455-53A.

E. Acceptance

Acceptance of system shall occur after all required documentation, test results, certification of test results and operation by the City of Tucson, Final acceptance shall include a visual inspection of the system in its entirety and approval of City of Tucson, or their appointed representative(s).

F. Warranty

Contractor shall certify and warrant the complete system for operation at current EIA/TIA 568B 100 MHz specifications for a period of not less than 15 years.

3.4 CABLE LABELING

All horizontal fiber optic cables shall be labeled according the same scheme as horizontal cable runs described elsewhere.

All vertical or interbuilding Fiber Optic Cables will be identified with the following labeling scheme. Within 3 feet of termination, a Panduit part # PST-FO or equal yellow and black "CAUTION Fiber Optic Cable" plastic label will be attached. It will be labeled according to the following scheme:

EXAMPLE: COT-001-96MM-CHXXX-149/PWXXX-213

		Local Site Cable	Remote Site Cable
COT-	001-	96MM	CH
City of Tucson Fiber Optic Cable	Cable Number 001 to 1000 or greater	Indicates that cable contains 96 Multimode Fibers	Cable runs between CH= City Hall Basement Room #149 and PW = Public Works Room #213

OSP =	Outside Plant Cable	SM =	Singlemode
3 DFX =	Multimode Outside	HY =	Hybrid
4 DNX =	Singlemode Outside	0 =	Basement
OFNR =	Riser Cable Indoor	1 =	First floor
OFNP =	Plenum Cable Indoor	2 =	Second floor
MM =	multimode	3 =	Third floor, etc.

3.5 CONDUITS – ABOVE GRADE

A. All conduits shall be routed parallel or perpendicular to the building lines. No diagonal runs will be permitted.

B. All raceway shall be painted to match its environs. All 90-degree turns in raceway must be provided with the appropriate junction to ensure non-violation of bend radius.

C. Any conduit from a workstation that does not go home-run to the telecommunications room but rather is specified as a stub out above a push-up tile ceiling shall include a gentle sweep toward the proposed telecommunications closet, a connector, and bushing.

D. Where conduits are not continuous from workstation to closet, cables must be supported in an approved method every 5 feet.

E. All raceways and conduits passing through fire barriers shall be filled in accordance with all local codes. Fire proofing shall at a minimum be rated for one (1) hour.

3.6 UNDERGROUND CONDUIT SYSTEM

3.6.1 Conduit.

A. **Handling and Storage.** All conduit shall be transported in modules or bundled in a straight and level position. The straps securing the conduit to any transport vehicle shall be a minimum of 4 inches in width and shall not deform or damage the conduit in any manner. Conduits shall be unloaded in accordance with the manufacturer's recommendations and shall not be dropped to the ground.

   Conduits shall be stored in a straight and level position in stacks not exceeding 8 feet in height. Materials shall be stored in an approved manner and covered to prevent ultraviolet deterioration due to the exposure to sunlight. When stored, conduit ends shall not be capped nor shall conduit be subject to temperatures in excess of 140° F.

B. **Cleaning.** The interior of the conduit shall be kept clean and free of debris. Prior to installation, all foreign materials shall be removed from the interior of the conduit with compressed air and a swab.

C. **Size.** Unless otherwise indicated on the plans or special provisions, all conduit shall be 4-inch diameter.

D. **Cuts and Connections.** The conduit shall be cut square, de-burred, and trimmed to remove all rough edges. PVC conduit connections shall be of the solvent weld type. Wipe conduit dry and clean before joining. Apply a full coat of primer to the pipe and coupling per the manufacturer's recommendations. Apply a full and even coat of solvent cement to the entire area inserted into the fitting. Prevent excess cement from accumulating in the interior of the conduit. Allow joint to cure a minimum of 20 minutes. The complete joint shall be water tight. Where a connection is made to a steel bend, the coupling used shall be a threaded PVC female adapter.

   Expansion fittings shall not be installed in PVC conduit runs except as follows. Expansion fittings shall be installed in conduit runs where both ends are fixed in-place, such as between two foundations, and within concrete structures. Expansion fittings shall allow for a minimum linear expansion of six inches.

E. **Bends.** Bends shall be installed only when absolutely necessary. All bends shall be constructed of rigid steel conduit. Bends shall be factory bent or field bent. Bends shall have a radius of not less than 12 times the nominal diameter of the conduit. Conduit shall be bent without crimping or flattening, using the longest radius practicable. The sum of the deflection angles of all bends in any conduit run shall not exceed 270 degrees between termination and/or junction points. For the purpose of calculating the sum of the deflection angles, bends with a radius of 500 feet or greater may be excluded from this criteria.

F. **End Treatment.** Conduit ends shall be capped with conduit end caps at all times when work is not in progress. Rigid steel sweeps terminating in pull boxes shall be plugged.

G. **Placement.** Conduit runs shown on the plans shall be changed only to avoid underground obstructions and only as directed by the Engineer and City of Tucson Communications Engineering (CE) Representative.

Unless otherwise specified, conduits shall be placed with a minimum cover of 36 inches to the top of the conduit below the finished grade. All conduit runs on under roadways or parking lots on City property shall be encased in concrete. Additionally, the conduit shall be placed to provide a minimum of 24 inches of clearance between the bottom of all subgrade scarification and the top of the conduit.

Conduits shall be installed along the straightest horizontal and vertical alignment practicable, and with a uniform depth of cover. Variations in the alignment shall be accomplished with smooth transitions maximizing the radius of the bends. In cases where it is impossible to maintain the alignment of the conduit, the grade of the conduit shall be transitioned using the minimum number and the longest radius bends. Should discovered field conditions necessitate additional bends in the conduit run, the location and number of pull boxes shall be adjusted as directed by the Engineer and City of Tucson Communications Engineering (CE) Representative.

Conduits encased in concrete shall be installed on plastic conduit spacers. The spacers shall be placed at suitable locations to prevent sagging of the conduit between spacers or at 10 foot maximum centers. Prior to the placement of the concrete, the conduits shall be tied down to prevent them from floating.

Conduit penetrations into pull boxes shall be made using the knockouts or shall be cored in the structure. Conduits entering through the side wall of pull boxes shall be located three inches above the floor and three inches away from the end wall of the box. Conduit entering the bottom of pull boxes shall be located in the near side corner of the box, approximately 3 inches away from the side and end walls. The conduit shall be sloped towards the top center of the box to facilitate pulling of the cables and innerduct. Conduits terminating in pull boxes shall terminate a minimum of three inches inside the box wall. The void between the conduit and the box shall be completely filled with mastic to form a watertight seal.

Conduits entering vaults shall enter through single duct knockouts. The location of the knockout shall be as indicated on the plans, or directed by the Engineer. The joint between the knockout and the conduit shall be filled to form a watertight seal.

At all locations where the conduits cross under a new curb, the letters "FO" shall be cut into the top of the curb directly over the conduit run. The letters shall be three inches tall and shall be clearly defined.

3.6.2 Trenching.

A. Unless otherwise specified, all conduit runs shall be installed by trenching methods. Trenching shall include the removal of all material to the design grade no matter what type of material is encountered. The alignment of the conduit shall be staked in the field per the City of Tucson's standard procedures.

B. When trenching in excess of five feet is required, the contractor shall submit, in writing to the Engineer and City of Tucson Communications Engineering (CE) Representative, a detailed description of the proposed trenching operations, including shoring methods, prior to the commencement of construction.

C. All conduit shall be covered with bedding material at the completion of each day's work to prevent shrinkage and thermal expansion that could influence the alignment of the conduit.

D. Concrete encasement shall be a minimum of Class B (2,500 PSI) in accordance with Pima County/City of Tucson Standard Specifications and provide a minimum cover on all sides of the conduit of 3 inches. Otherwise, bedding and shading of the conduit shall be in accordance with the plans and specifications of the subject project. When installed adjacent to water mains, the conduit stall be encased in Controlled Low Strength Material (CLSM).

3.6.3 Backfill.

A. Upon completion of the conduit and bedding installation, the trench shall be backfilled and compacted. The backfill shall be constructed according to the Pima County, City of Tucson, Standard Specifications and Details for Public Improvements.

B. Place the detectable warning tape in the backfill, 18 inches above the top of the conduit.

C. All underground conduits shall be buried a minimum of 36 inches cover.

D. When the conduit is installed in a joint trench with a water main, the bedding and shading material shall be aggregate bedding material meeting the specifications for the water main.

3.6.4 Boring and Jacking.

A. The boring and jacking method shall be approved by the engineer prior to the commencement of work. Where a conduit run is required by the plans to be installed by boring or jacking, the trenching method shall not be utilized except with prior written approval of the Engineer.

B. When casing is used, the casing shall be schedule 40 "standard wall" steel pipe. The casing shall not deviate more than 0.20 feet from the design grade. The joints in the casing shall be fully welded in accordance with A.S.M.E. Section 9. Concrete end seals shall be provided at each end. The intervening annular space shall be filled with sand material approved by the Engineer.

C. Boring and jacking pits shall be located a minimum of two feet outside the pavement edge. The diameter of the bore shall be as close to the outside diameter of the conduit such that it will enable the conduit to be installed. At all locations where the diameter of the bore is 2 inches, or greater, than the outside diameter of the conduit, the interstitial space between the conduit and the bore shall be filled with slurry. All boring and jacking methods used shall neither damage nor deform the conduit. The installed conduit shall conform with the alignment and grade shown on the plans.

3.6.5 Installation in Concrete Structures. Conduit embedded in concrete structures shall be securely attached to the reinforcing steel at locations and intervals detailed on the plans. Expansion fittings shall be installed at all locations where the conduit crosses expansion joints in the structure. Expansion joints shall also be installed at the point where the conduit enters and exits the concrete structure. Where it is not possible to install expansion joints, the conduit shall be installed in a conduit sleeve of sufficient size to provide a minimum of 1/2-inch clearance between the outside diameter of the conduit and the inside wall of the sleeve. Sleeves shall be discontinuous across the expansion joints in the structure.

3.6.6 Pull Boxes and Vaults. Prior to setting the pull box or vault, verify that the excavation is to the design elevation and alignment. Pull boxes shall be placed on a minimum of five cubic feet of clean 1" (size #57) crushed stone to provide drainage. Vaults shall be placed on a minimum of 16 cubic feet of clean 1" (size #57) crushed stone with a minimum 8" sump hole knocked out to provide drainage. Pull boxes and vaults shall be placed such that the crushed stone does not wash away or into the conduit. Vaults and pull boxes shall NOT be placed in a location of water drainage or standing water. The top plane of the cover shall be a minimum of 6" above possible standing water level for the location. Install the precast sections in accordance with ASTM C891. Joints between the precast sections shall be sealed with a flexible butyl sealant meeting the requirements of AASHTO M-198. Set boxes and vaults true and plumb. Install precast adjustment rings and the frame and cover to finished grade. Backfill and compact around the structure avoiding damage to the structure. The backfill shall be compacted to a minimum of 95 percent of the maximum density as determined by ASTM D698.

Pull boxes shall be encased in a concrete ring a minimum 10” wide and a minimum of 12” deep on compacted soil. Each pullbox/vault shall be provided with a 5/8” by eight foot ground rod and acorn, driven vertically in the corner with six inches of rod exposed above the top of the drainage rock. Cables passing through pull boxes require a minimum 50 feet service loop where attainable without exceeding manufacturer’s minimum bend radius. Cables pulled through manholes/ vaults require not less than 150 feet before exiting.

3.6.7 Innerducts. All 4 inch conduits shall have 4 (quantity) 1 inch *smoothwall exterior ribbed interior* innerducts with 1250 pound test rated pull strength mule tape installed.

3.6.8 Tracer Wire, Electronic Marker, Mule Tape. A continuous, separate #10 AWG THW/XHHW CU green insulated tracer wire shall be installed in each conduit run, external to the innerducts. All lubricants used in the pulling of the tracer wire shall be water soluble. No splicing of the tracer wire shall be permitted in the conduit runs. The ends of the wire shall extend into each pull box, or vault, a minimum of 5 feet, coiled and secured. Connect the ends of all tracer wires within a pull box, or vault, together to a common lug. An electronic marker, 3M model 1255 mini-marker shall be placed by the Contractor at the location of any capped conduit not in a building or pullbox. All unoccupied or capped conduits shall have a detectable 2500 pound test rated pull strength mule tape installed, secured at each end and shall be labeled with location of opposite end.

3.6.9 Building Penetrations. Building penetrations shall be stubbed up 6 inches from finished grade and capped. Seal all penetrations to the same specification as the original.

3.6.10 Pole Risers. All risers off power poles shall consist of 4” Intermediate Metallic Conduit (IMC) Riser with (4) 1” Innerducts, Watertight Alibi, and Blank Duct Plugs. Installed per TEP Electric Service Requirements for Riser Details – Telco/CATV/CAP, SR-221 or per most current Revision.

3.6.11 Underground Conduit Testing and Cleaning.

A. The completed conduit runs shall be cleaned and tested prior to final acceptance. Cleaning shall consist of pulling a swab through the conduit and removing all foreign material from within the conduit. If water is allowed to enter the conduit during construction, it shall be blown out or removed by other satisfactory means prior to the acceptance of the system. Vaults and pull boxes shall be cleaned of all debris. Upon completion of the cleaning operations, the ends of the conduit shall be capped.

City Architecture & Engineering Division Project Managerial Requirements

Design shall conform to sections 17000 and 975, Telecommunications Infrastructure. Project Managers shall instruct their consultant designers to insure that any written specifications are formatted as applicable to each project such that there is no room for misinterpretation on the part of any contractor or field inspector. Although Project Managers and their Consultants may import the content of these requirements and guidelines into their project designs, said requirements and guidelines are not substitutions for due diligence in design, procurement, and construction. **Details and specifications shall reflect actual project conditions.**

The sections below entitled "City Architecture and Engineering Division Project Execution Requirements", "City Architecture and Engineering Division General On-Site Design Requirements", and "800 Mhz In-Building Amplification System Requirements" have been broken out for the convenience of all Project Managers. However, it is the Architecture & Engineering Division Project Manager's responsibility to verify that any work delegated to outside consultants is performed in compliance with these City of Tucson (City) Guidelines.

Project Managers shall coordinate with Communications Engineering (CE) to determine the optimum connection point and routing to the WAN. Final cost estimation for said connections shall be detailed as a part of the subject project. For the purposes of site selection, it may be helpful to access the web site http:/dot.ci.tucson.az.us/mapcenter/, select "TDOT Maps", and view "Fiber Optic".

It is the responsibility of the Project Manager to determine whether any pathway, conduit system, horizontal or riser cable, copper or optical fiber, will be installed in plenum spaces. If so, the above shall be plenum rated.

Project Construction Administrators shall coordinate with CE during the construction period. This coordination shall include a discussion of all system modifications, and the schedule of inspections and system testing. All tests shall be witnessed by a CE representative. Final acceptance of the project shall not be issued until such time that CE or its representative approves and accepts the City fiber conduit system. The representative of CE observing the testing of the conduits may install a tag labeled "DEDICATED CITY OF TUCSON COMMUNICATION CONDUIT. CONTACT TECHNICAL PLANNING AND RESOURCES DIVISION BEFORE USING." when the conduit run has satisfactorily passed all testing. No party other than CE shall remove said plug and label once it is installed.

CE shall be included in the review process for all Architecture/Engineering Division projects. It shall be the ultimate responsibility of the Project Manager to insure that all CE comments are conveyed to any designer, and are properly addressed.

B. All conduit runs shall be clearance tested after the completion of all backfilling and subgrade preparation operations. This test shall consist of pulling a mandrel through the conduit run. The mandrel shall be segmented with an outer diameter not less than 1/4 inch smaller than the inside diameter of the conduit, and shall be minimum 10" inches in length. The test shall be considered acceptable when the mandrel can be passed through the entire conduit run with a pulling force of 300 pounds or less. Each conduit run shall be verified for continuity along its entire length, as noted on the plans, and by means of an underground line locator. The installed conduit system shall be marked on the ground using standard bluestake color code and markings procedures.

C. All modifications, testing and final inspection of the system shall be scheduled with, and conducted in the presence of the Communications Engineering (CE) Division of the City of Tucson Department of Information Technology Representative. Provide 72 hour advance notice to Bobby Sweet at 419-3459. The field inspector shall notify CE of the construction schedule to facilitate inspection of the City fiber conduits. All portions of the system that do not pass the specified testing shall be repaired by the contractor, and retested, at no additional cost.

3.6.12 Building Penetrations. All building penetrations shall be reviewed and approved by Communications Engineering (CE) Division of the City of Tucson Department of Information Technology Representative. Penetrations shall be cored unless otherwise approved by CE representative. All penetrations shall be executed and sealed per local, state, and federal fire codes.

3.6.13 As-Built Drawings. At the completion of the project, one electronic and one reproducible vellum copy of the “As-Built” drawings and shall be provided to the CE Division of the City of Tucson Department of Information Technology.

Section 975 - Telecommunications Infrastructure: DOT Format

975-1 DESCRIPTION

The work covered under this section shall consist of a Complete-in-Place installation, furnishing all material, labor and equipment, and installing conduit, pull boxes, vaults, and tracer wires for an underground fiber optic conduit system, including excavation, backfilling, compacting, jacking, and boring in accordance with the details.

975-2 MATERIALS

975-2.01 Polyvinyl Chloride (PVC) Conduit. All conduit shall be listed by UL and conform to NEC standards. Unless otherwise specified, all conduit to be installed underground or installed in concrete structures shall be 4-inch diameter, rigid Polyvinyl Chloride (PVC) Non-Metallic Conduit. The PVC conduit shall be schedule 40, heavy wall, sunlight resistant, manufactured from high impact material and shall be rated for use at 90 degrees centigrade. The conduit shall meet the specifications of UL 651 and NEMA TC-2, and furnished with interface fit bell ends. Fittings shall be schedule 40 PVC, meeting the specifications of NEMA TC-3 and UL 514.

975-2.02 Conduit with Integral Innerduct. Conduit with Integral Innerduct shall be of schedule 40 PVC in modular, slip fit lengths. Shall have pre-lubricated innerducts with internal spacers and which expand and contract at the same rate as the outerduct. Shall have anti-reversing gaskets, and an o-ring gasket at bell base. Shall have inward tapering holes on coupling body for easy assignment, printed indication such as “Install Print Side Up” to keep system straight during installation, and marked innerduct and marked hole on coupling body to insure proper innerduct alignment and allow crews to work from opposite directions. Bends shall be flexible and engineered to be cut-through resistant. Carlon Telecom Systems Multi-Gard or equivalent. All integral innerducts shall have a continuous non-spliced, unknotted detectable 1250 pound test mule tape installed.

975-2.03 Solvent Cement for Polyvinyl Chloride (PVC) Conduit and Couplings. All solvent cement shall meet the requirements of ASTM D 2564. The cement shall be of a medium or heavy bodied cement capable of making watertight joints. The cement and primer shall be of a type recommended by the manufacturer of the conduit.

975-2.04 Rigid Steel Conduit Sweeps. Conduit sweeps shall be listed by UL and conform to NEC standards. The sweeps shall be steel, hot dipped zinc coated, meeting the requirements of UL 6 and ANSI C80.1, and shall carry the Underwriters Laboratory label. Non-thread couplings shall not be used. Sweeps shall have a minimum radius of 12 times the nominal diameter of the conduit. Steel conduit sweeps shall have a factory applied 40 mil PVC coating or be doubled (half overlap) wrapped with a 10 mil PVC plastic tape specifically manufactured for corrosion protection of metallic conduits installed below grade.

975-2.05 Flexible Conduit. When specifically indicated on the plans and where approved by the engineer, flexible solid wall direct bury conduit may be used. The conduit shall be manufactured of Polyvinyl Chloride (PVC), or Polyethylene (PE) plastic. The conduit shall be specifically manufactured for direct buried fiber optic raceway systems and shall be Carlon "Optic-Gard PE" conduit, or approved equal. Flexible conduit shall not be utilized for making bends in conduit system. Connection between the flexible conduit and conduits of other materials shall be made with a watertight transition coupling manufactured for the specific type of material.

975-2.06 Plastic Conduit Spacers. Spacers shall be constructed of Polyvinyl Chloride (PVC) or other non-metallic material. The spacers shall be vertical and horizontal interlocking and provide a minimum of 3-inch clearance between conduits. Base spacers shall be provided with a wide base plate to provide solid support on the bottom of the trench. The base spacers shall provide for a minimum clearance of 3 inches between the bottom of the trench and the conduit.

975-2.07 Aggregate Bedding Material. Aggregate material for bedding material shall meet the gradation indicated in the specifications and on the drawings for the subject project. The plasticity index shall also conform to the specifications under which the subject project is designed and constructed.

975-2.08 Controlled Low Strength Material (CLSM). Materials comprising the controlled strength material shall conform to the requirements of Section 1006. CLSM mix designs shall be in accordance with Table 975-2. Unless otherwise designated on the plans, in the special provisions or directed by the Engineer, the CLSM shall be Mix No. 2.

Table 975-2

Mix Proportions For Controlled Low Strength Material

	CLSM No. 1	CLSM No. 2	CLSM No. 3
Compressive Strength, 28 days PSI	50	500	1000
Portland Cement (lb)	60	190	280
Water (lb)	475	460	440
Fly Ash (lb)	290	300	300
Fine Aggregate (lb)	2,770	2,680	2,650

975-2.09 Detectable Warning Tape. On open trenching an electronically detectable 6" Fiber Warning tape shall be installed 18" above the conduit. Tape shall be acid and alkali-resistant polyethylene film, with a minimum thickness of 0.004 inch. The tape shall have a minimum strength of 7500 PSI lengthwise and 1,500 PSI crosswise. The tape shall be manufactured with integral wires, foil backing, or other means to enable its detection by a metal detector when the tape is buried up to a depth of 3 feet deep. The tape shall be orange in color and have the following continuous inscription, "CAUTION - FIBER OPTIC CABLE BURIED BELOW". The inscription shall be 2 inch black letters.

975-2.10 Backfill Material. The backfill material shall conform to that of the subject project.

975-2.11 Tracer Wire. The cable and wire shall be listed by UL and conform to NEC standards. The wire shall be a continuous unspliced stranded CU 10AWG, rated for 600 volts, and shall be type THW or XHHW. The color of the wire shall be green. The wire shall be of the required length to eliminate all splices within the conduit.

975-2.12 Pull Boxes. Communications pull boxes shall be UL listed. Pull boxes shall be of a reinforced composite material of a neutral color. The pullbox shall have a bolt-down cover secured by a minimum of two (2) recessed hex-head bolts. The pullbox cover shall have the word "COMMUNICATIONS" in permanent raised, stamped or welded lettering. The pullbox cover shall have a skid-resistant surface. Pull boxes shall be open base. The pullbox cover shall have two (2) ½" x 4" pull slots. The pullbox base shall have two (2) 4 ½" x 4 1/2" mouse holes, one at each end. Pull boxes may be extended by means of an "extension". The extension shall have eight (8) 4 1/2" x 4 1/2" knockouts, two on each side. Contractor shall provide all necessary collars, extensions, hardware, sealant, and conduit caps. All conduit entrances shall be sealed. The assigned pullbox number shall be painted on the box at the time of installation. Chipped, cracked, or otherwise damaged boxes and covers will not be accepted.

975-2.13 Vaults. Communications vaults shall be UL listed. Vault base shall be pre-cast concrete with a minimum thickness of 4". Vault cover shall be pre-cast concrete with a minimum 36" x 36" galvanized steel locking lid secured by a minimum of one (1) recessed hex-head bolt. The cover lid shall have "COMMUNICATIONS" written on it in permanent raised, stamped or welded lettering. The vault base and vault cover shall be gasketed and weather proof. Vaults shall have a minimum outside dimension of 48" long by 48" wide by 50" high with a minimum thickness of 4". The base shall have one (1) 8" diameter by 4" deep sump hole knockout in the floor. The base interior shall have a minimum of one (1) 2 ½" diameter ground rod knockout in the floor , at a corner; the base interior shall have four (4) 7/8" diameter pulling irons, one centered on each side. The base exterior walls shall have four (4) 36" "C" channels precast in the sides, one on each side; the base exterior shall have four (4) 18" x 18" knockouts, one on each side; and, the base exterior shall have sixteen (16) 4 1/2" diameter knockouts for 4" conduit entrances, four on each side. Contractor shall provide all necessary collars, extensions, hardware, sealant, and conduit caps. All conduit entrances shall be sealed. The assigned box number shall be painted on the box at the time of installation. Chipped, cracked, or otherwise damaged boxes and covers will not be accepted.

975-2.14 Portland Cement Concrete. Concrete shall be Class B meeting the requirements of Section 1006 of the Pima County/City of Tucson Standard Specifications for Public Improvements.

975-2.15 Innerduct. Innerduct shall be 1" PVC constructed of a smooth walled exterior and a ribbed interior with a continuous unknotted 1250 pound test muletape installed. No corrugated innerduct will be accepted.

975-2.16 Watertight Alibi. Watertight Alibi shall consist of a Quadraplex Duct Plug designed to seal around, organize, and support innerduct where it emerges at the top of the risers, pull boxes, and vaults. Fasteners shall be stainless steel. Plug shall support a minimum of 400 lbs of cable, and shall be removable. Jackmoon or equivalent. No chemical seals will be accepted.

975-2.17 Blank Duct Plugs. Blank Duct Plugs shall be installed in each individual innerduct where it emerges at the top of the risers, pull boxes, and vaults. Shall be all plastic construction, corrosion proof, water and air tight to 30 psi. Jackmoon or equivalent.

975-3 CONSTRUCTION DETAILS

975-3.01 Conduit.

(A) Handling and Storage. All conduit shall be transported in modules or bundled in a straight and level position. The straps securing the conduit to the vehicle shall be a minimum of 4 inches in width and shall not deform or damage the conduit in any manor. Conduits shall be unloaded in accordance with the manufacturer's recommendations and shall not be dropped to the ground.

Conduits shall be stored in a straight and level position in stacks not exceeding 8 feet in height. Materials shall be stored in an approved manner and covered to prevent ultraviolet deterioration due to the exposure to sunlight. When stored, conduit ends shall not be capped nor shall conduit be subject to temperatures in excess of 140° F.

(B) Cleaning. The interior of the conduit shall be kept clean and free of debris. Prior to installation, all foreign materials shall be removed from the interior of the conduit with compressed air and a swab.

(C) Size. Unless otherwise indicated on the plans or special provisions, all conduit shall be 4-inch diameter.

(D) Cuts and Connections. The conduit shall be cut square, de-burred, and trimmed to remove all rough edges.

PVC conduit connections shall be of the solvent weld type. Wipe conduit dry and clean before joining. Apply a full coat of primer to the pipe and coupling per the manufacturer's recommendations. Apply a full and even coat of solvent cement to the entire area inserted into the fitting. Prevent excess cement from accumulating in the interior of the conduit. Allow joint to cure a minimum of 20 minutes. The complete joint shall be water tight. Where a connection is made to a steel bend, the coupling used shall be a PVC female adapter.

Expansion fittings shall not be installed in PVC conduit runs unless otherwise specified. Expansion fittings shall be installed in conduit runs where both ends are fixed in-place, such as between two foundations, and within concrete structures. Expansion fittings shall allow for a minimum linear expansion of six inches.

(E) Bends. Bends shall be installed only when absolutely necessary. All bends shall be constructed of rigid steel conduit. Bend shall be factory bent or field bent. Bends shall have a radius of not less than 12 times the nominal diameter of the conduit. Conduit shall be bent without crimping or flattening, using the longest radius practicable. The sum of the deflection angles of all bends in any conduit run shall not exceed 270 degrees between termination and/or junction points. For the purpose of calculating the sum of the deflection angles, bends with a radius of 500 feet or greater may be excluded from this criteria.

(F) End Treatment. Conduit ends shall be capped with conduit end caps at all times when work is not in progress. Rigid steel sweeps terminating in pull boxes shall terminate with an approved plastic bushing.

(G) Placement. Conduit runs shown on the plans shall be changed only to avoid underground obstructions and only as directed by the Engineer and TRP Representative.

Unless otherwise specified, conduits shall be placed with a minimum cover of 36 inches to the top of the conduit below the finished grade; the minimum requirement for Transportation projects is 30" due to the depth of electrical conduit placement. When conduit runs, or any part thereof, cannot be installed at the minimum depth, the run, or part thereof, shall be encased in concrete.

Conduits shall be installed along the straightest horizontal and vertical alignment practicable, and with a uniform depth of cover. Variations in the alignment shall be accomplished with smooth transitions maximizing the radius of the bends. In cases where it is impossible to maintain the alignment of the conduit, the grade of the conduit shall be transitioned using the minimum number and the longest radius bends. Should discovered field conditions necessitate additional bends in the conduit run, the location and number of pull boxes shall be adjusted as directed by the Engineer and City of Tucson Communications Engineering (CE) Representative.

Conduits to be encased within Controlled Low Strength Material (CLSM) or concrete shall be installed on plastic conduit spacers. The spacers shall be placed at suitable locations to prevent sagging of the conduit between spacers or at 10 foot maximum centers. Prior to the placement of the CLSM or concrete, the conduits shall be tied down to prevent them from floating.

Conduit penetrations into pull boxes shall be made using the knockouts or shall be cored in the structure. Conduits entering through the side wall of pull boxes shall be located three inches above the floor and three inches away from the end wall of the box. Conduit entering the bottom of pull boxes shall be located in the near side corner of the box, approximately 3 inches away from the side and end walls. The conduit shall be sloped towards the top center of the box to facilitate pulling of the cables and innerduct. Conduits terminating in pull boxes shall terminate a minimum of three inches inside the box wall. The void between the conduit and the box shall be completely filled with mastic to form a watertight seal.

Conduits entering vaults shall enter through single duct knockouts. The location of the knockout shall be as indicated on the plans, or directed by the Engineer. The joint between the knockout and the conduit shall be filled to form a watertight seal.

At all locations where the conduits cross under a new curb, the letters "FO" shall be cut into the top of the curb directly over the conduit run. The letters shall be three inches tall and shall be clearly defined.

975-3.02 Trenching. Unless otherwise specified, all conduit runs shall be installed by trenching methods. Trenching shall include the removal of all material to the design grade no matter what type of material is encountered. The alignment of the conduit shall be staked in the field per the City of Tucson's standard procedures.

When trenching in excess of five feet is required, the contractor shall submit, in writing to the Engineer, a detailed description of their proposed trenching operations, including shoring methods, prior to the commencement of construction.

All conduit shall be covered with bedding material or Controlled Low Strength Material (CLSM) at the completion of each day's work to prevent shrinkage and thermal expansion that could influence the alignment of the conduit.

Concrete encasement shall be a minimum of Class B (2,500 PSI) in accordance with Pima County/City of Tucson Standard Specifications and provide a minimum cover on all sides of the conduit of 3 inches. Otherwise, bedding and shading of the conduit shall be in accordance with the plans and specifications of the subject project. When installed adjacent to water mains, the conduit stall be encased in Controlled Low Strength Material (CLSM).

(A) Bedding and Shading. Bedding and shading of the conduit shall be in accordance with the following:

Conduits installed in conjunction with Tucson Water projects shall be designed and installed under the plans and specifications of the subject project.

Conduits installed with traffic signal or street lighting conduits shall be designed and installed under the plans and specifications of the subject project.

Conduits with a depth of cover less than cited above, and where indicated on the plans, shall be encased in concrete. The concrete shall be placed to provide a minimum of three inches of encasement on all sides of the conduit.

(B) Backfill. Upon completion of the conduit and bedding installation, the trench shall be backfilled and compacted. The backfill shall be designed and constructed under the plans and specifications of the subject project. Place the detectable warning tape in the backfill, 18 inches below finished grade and directly above the conduit.

975-3.03 Boring and Jacking. Conduit runs shall be installed by boring and jacking methods when required by the plans or directed by the engineer. The boring and jacking method shall be approved by the engineer prior to the commencement of work. Where a conduit run is required by the plans to be installed by boring or jacking, the trenching method shall not be utilized except with prior written approval of the Engineer.

When casing is used, the casing shall be schedule 40 “standard wall” steel pipe. The casing shall not deviate more than 0.20 feet from the design grade. The joints in the casing shall be fully welded in accordance with A.S.M.E. Section 9. Concrete end seals shall be provided at each end. The intervening annular space shall be filled with sand material approved by the Engineer.

Conduits installed within the casing used for water mains shall consist of either four each one (1) inch, four each one and one-half (1 1/2) inch, or two, or more, two (2) inch diameter flexible conduits. The largest practical size shall be used. The conduits shall be strapped to the glass reinforced skids installed on the water line, pulled into the casing after the water main is installed, or installed on a hanger welded to the casing. The alignment of the conduits shall be maintained as straight as possible. The placement of sand within the annular space of the casing shall be controlled to a rate that does not displace the conduit.

Boring and jacking pits shall be located a minimum of two feet outside the pavement edge. The diameter of the bore shall be as close to the outside diameter of the conduit such that it will enable the conduit to be installed. At all locations where the diameter of the bore is 2 inches, or greater, than the outside diameter of the conduit, the interstitial space between the conduit and the bore stall be filled with slurry. All boring and jacking methods used shall neither damage nor deform the conduit. The installed conduit shall conform with the alignment and grade shown on the plans.

975-3.04 Concrete Structures. Conduit embedded in concrete structures shall be securely attached to the reinforcing steel at locations and intervals detailed on the plans. Expansion fittings shall be installed at all locations where the conduit crosses expansion joints in the structure. Expansion joints shall also be installed at the point where the conduit enters and exits the concrete structure. Where it is not possible to install expansion joints, the conduit shall be installed in a conduit sleeve of sufficient size to provide a minimum of 1/2-inch clearance between the outside diameter of the conduit and the inside wall of the sleeve. Sleeves shall be discontinuous across the expansion joints in the structure.

975-3.05 Pull Boxes and Vaults. Prior to setting the pull box or vault, verify that the excavation is to the design elevation and alignment. Pull boxes shall be placed on a minimum of five cubic feet of clean 1" (size #57) crushed stone to provide drainage. Vaults shall be placed on a minimum of 16 cubic feet of clean 1" (size #57) crushed stone with a minimum 8" sump hole knocked out to provide drainage. Pull boxes and vaults shall be placed such that the crushed stone does not wash away or into the conduit. Vaults and pull boxes shall NOT be placed in a location of water drainage or standing water. Set boxes and vaults true and plumb. The top plane of the cover shall be a minimum of one inch above finished grade and six inches above possible standing water level for the location. Backfill and compact around the structure avoiding damage to the structure. The backfill shall be compacted to a minimum of 95 percent of the maximum density as determined by ASTM D698.

Pull boxes shall be encased in a concrete ring a minimum 10" wide and a minimum of 12" deep on compacted soil. Each pullbox/vault shall be provided with a 5/8" by eight foot ground rod and acorn, driven vertically in the corner with six inches of rod exposed above the top of the drainage rock.

Install precast sections in accordance with ASTM C891. Joints between the precast sections shall be sealed with a flexible butyl sealant meeting the requirements of AASHTO M-198. Install precast adjustment rings and the frame and cover to finished grade.

Cables passing through pull boxes require a minimum 50 feet service loop where attainable without exceeding manufacturer's minimum bend radius. Cables pulled through manholes/ vaults require not less than 150 feet before exiting.

975-3.06 Innerducts. All 4 inch conduits shall have 4 (quantity) 1 inch *smoothwall exterior ribbed interior* innerducts with 1250 pound test rated pull strength mule tape installed.

975-3.07 Tracer Wire, Electronic Marker, Mule Tape. A continuous, separate #10 AWG THW/XHHW CU insulated tracer wire shall be installed in each conduit run, external to the innerducts. All lubricants used in the pulling of the tracer wire shall be water soluble. No splicing of the tracer wire shall be permitted in the conduit runs. The ends of the wire shall extend into each pull box, or vault, a minimum of 5 feet, coiled and secured. Connect the ends of all tracer wires within a pull box, or vault, together to a common lug. An electronic marker, 3M model 1255 mini-marker shall be placed by the Contractor at the location of any capped conduit not in a building or pullbox/vault. All unoccupied or capped conduits shall have a continuous unspliced unknotted 2500 pound test rated 22AWG detectable mule tape installed, secured at each end and shall be labeled with location of opposite end.

975-3.08 Testing and Cleaning. The completed conduit runs shall be cleaned and tested prior to final acceptance. Cleaning shall consist of pulling a swab through the conduit and removing all foreign material from within the conduit. If water is allowed to enter the conduit during construction, it shall be blown out or removed by other satisfactory means prior to the acceptance of the system. Vaults and pull boxes shall be cleaned of all debris. Upon completion of the cleaning operations, the ends of the conduit shall be capped. RGS sweeps terminating in pull boxes shall be plugged.

All conduit runs shall be clearance tested after the completion of all backfilling and subgrade preparation operations. This test shall consist of pulling a mandrel through the conduit run. The mandrel be segmented with an outer diameter of 1/4 inch less than the inside diameter of the conduit, and shall be minimum 10" inches in length. The test shall be considered acceptable when the mandrel can be passed through the entire conduit run with a pulling force of 300 pounds or less. Each conduit run shall be verified for continuity along its entire length, as noted on the plans, and by means of an underground line locator. The installed conduit system shall be marked on the ground using standard bluestake color code and markings procedures.

All testing of the system shall be scheduled with, and conducted in the presence of the Engineer. All modifications, testing and final inspection of the system shall be scheduled with, and conducted in the presence of the Communications Engineering (CE) Division of the City of Tucson Department of Information Technology Representative. Provide 72 hour advance notice to Bobby Sweet at 419-3459. The field inspector shall notify the Communications Engineering of the construction schedule to facilitate inspection of the City fiber conduits. All portions of the system that does not pass the specified testing shall be Operations repaired by the contractor, and retested, at no additional cost.

975-4 METHOD OF MEASUREMENT

975-4.01 Conduits. Conduits shall be measured by the linear foot for each diameter size of conduit. The measurement shall be from center to center of pull box or vault. No measurement or direct payment will be made for the trenching, bedding, encasement, tracer wire, marking tape, mule tape, backfill and testing, the cost being considered as included in the contract price for the conduit.

Upon approval of City of Tucson Developmental Services, one complete set of drawings shall be forwarded to CE. One complete set of drawings shall be forwarded to Communications Maintenance.
Project Managers shall provide customers and end users with the information detailed in the section entitled “For City Architecture and Engineering Division End Users and Customers”.

Upon project completion, the Project Manager shall verify that the Contractor has supplied new blueprints and electrically formatted drawings, which reflect all changes and “asbuilt” information.

975-4.02 Pull Boxes. Pull boxes will be measured as a unit for each pull box installed complete with cover and accessories.

975-4.03 Vaults. Vaults will be measured as a unit for each vault complete with frame and cover and accessories.

975-5 BASIS OF PAYMENT

975-5.01 Conduit. Acceptable quantities of conduit, measured as provided above, will be paid for at the contract unit price per linear foot, which price shall be full compensation for the work, complete in place, including any excavation, removals of obstruction, bedding, encasement, backfi1l, and any incidentals necessary to complete the work.

975-5.02 Pull Boxes. Acceptable quantities of pull boxes, measured as provided above, will be paid for at the contract unit price each, which price shall be full compensation for the work, complete in place, including any excavation, removals of obstruction, bedding, coring, knockouts, backfi1l, and any incidentals necessary to complete the work.

975-5.03 Vaults. Acceptable quantities of vaults, measured as provided above, will be paid for at the contract unit price each, which price shall be full compensation for the work, complete in place, including any excavation, removals of obstruction, coring, knockouts, support channels, bedding, backfi1l, risers, frames and covers, accessories, and any incidentals necessary to complete the work.

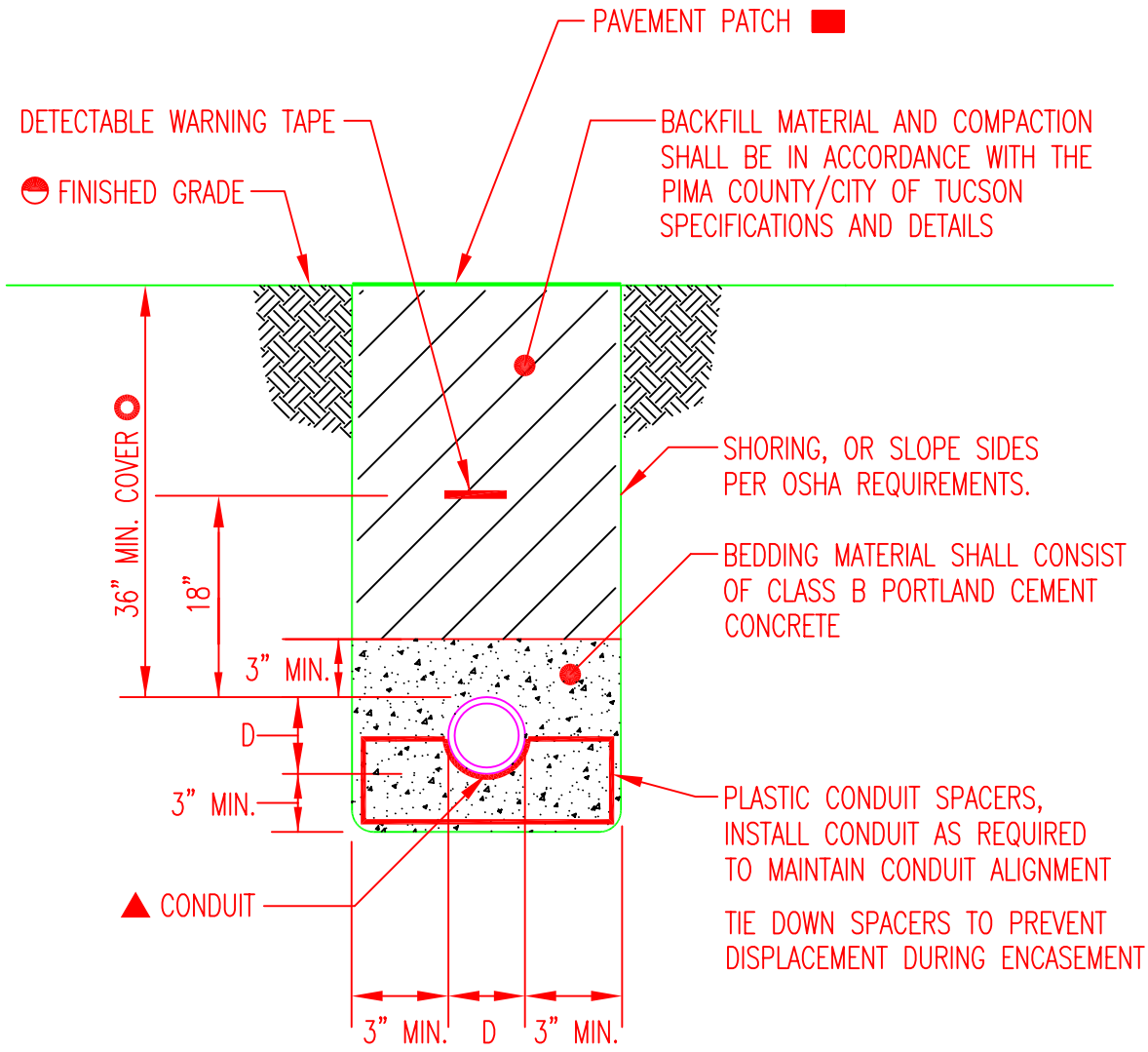

TYPE 1: SINGLE FO CONDUIT

REFER TO SHEET 6 OF 6 FOR GENERAL NOTES AND SYMBOLS.

ISSUED:		STANDARD DETAIL			DETAIL NO.:
JAN 1998		CONDUIT INSTALLATION		CITY OF TUCSON	FO-100
REVISED:					NOT TO SCALE
April 2007					SHEET 1 OF 6

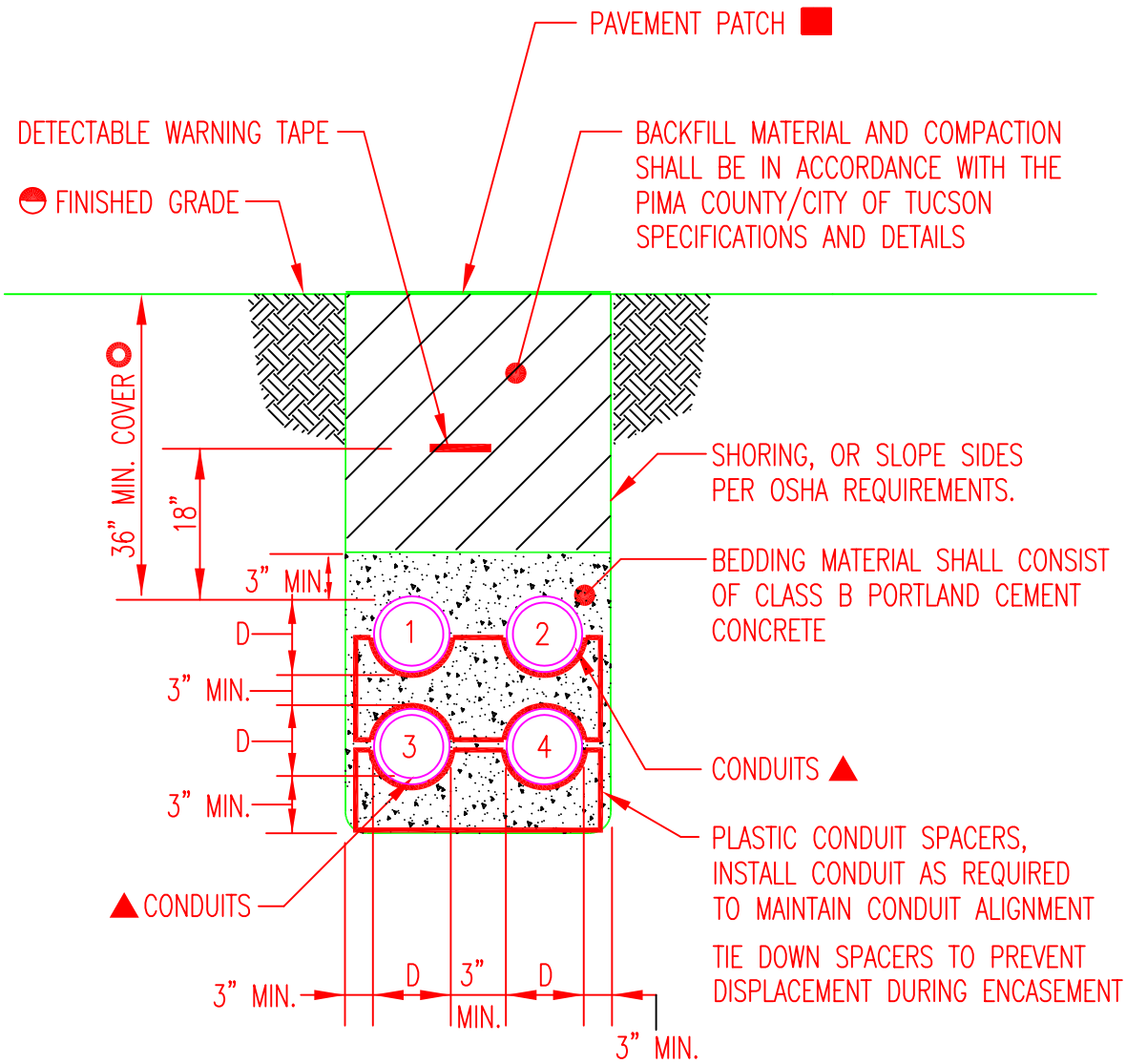

TYPE 2: MULTIPLE FO CONDUITS

REFER TO SHEET 6 OF 6 FOR GENERAL NOTES AND SYMBOLS.

ISSUED: JAN 1998		STANDARD DETAIL		CITY OF TUCSON	DETAIL NO.: FO-100
REVISED: April 2007		CONDUIT INSTALLATION			NOT TO SCALE
					SHEET 2 OF 6

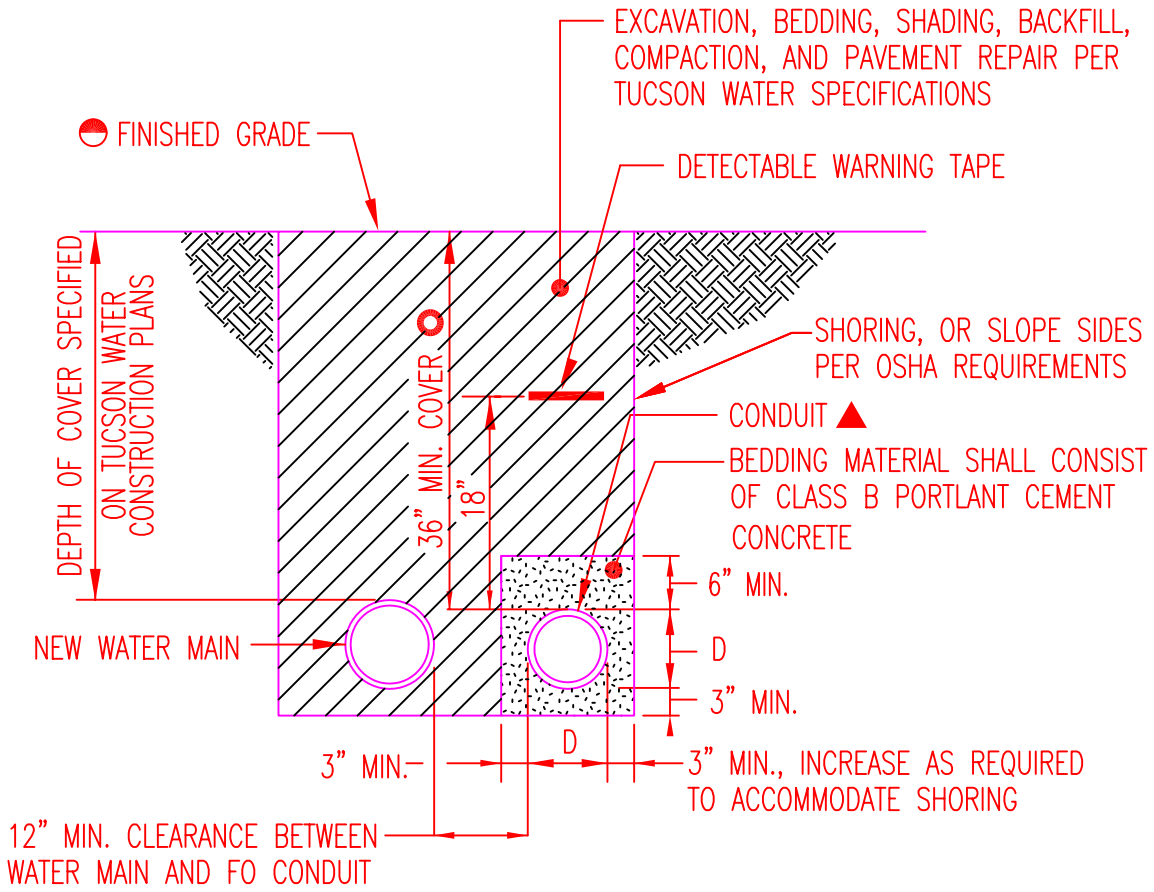

TYPE 3: FO CONDUIT INSTALLED ADJACENT TO TUCSON WATER MAIN

REFER TO SHEET 6 OF 6 FOR GENERAL NOTES AND SYMBOLS.

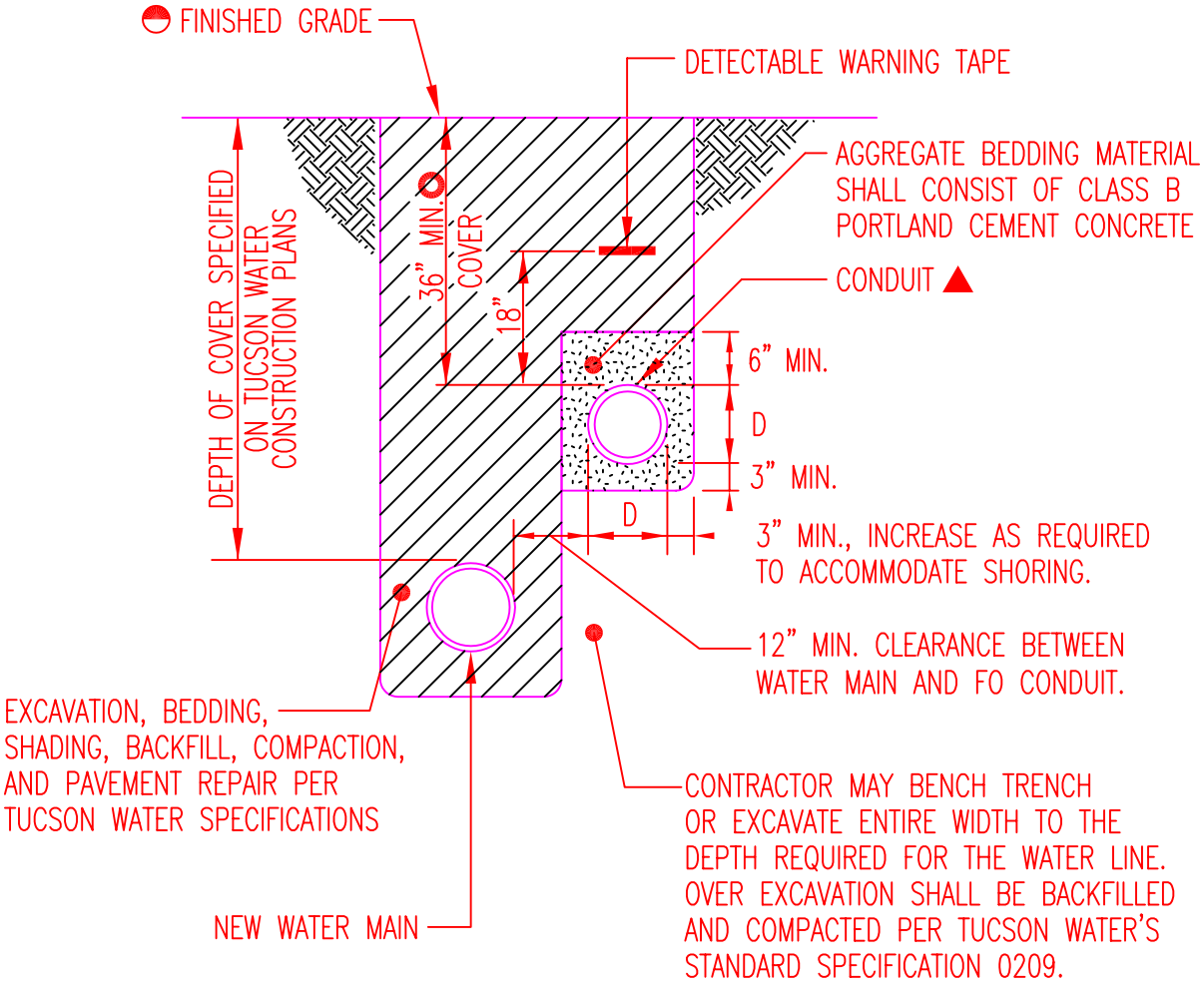

TYPE 4: FO CONDUIT INSTALLED ABOVE TUCSON WATER MAIN

REFER TO SHEET 6 OF 6 FOR GENERAL NOTES AND SYMBOLS.

ISSUED: JAN 1998		STANDARD DETAIL		CITY OF TUCSON	DETAIL NO.: FO–100
REVISED: April 2007		CONDUIT INSTALLATION			NOT TO SCALE
					SHEET 4 OF 6

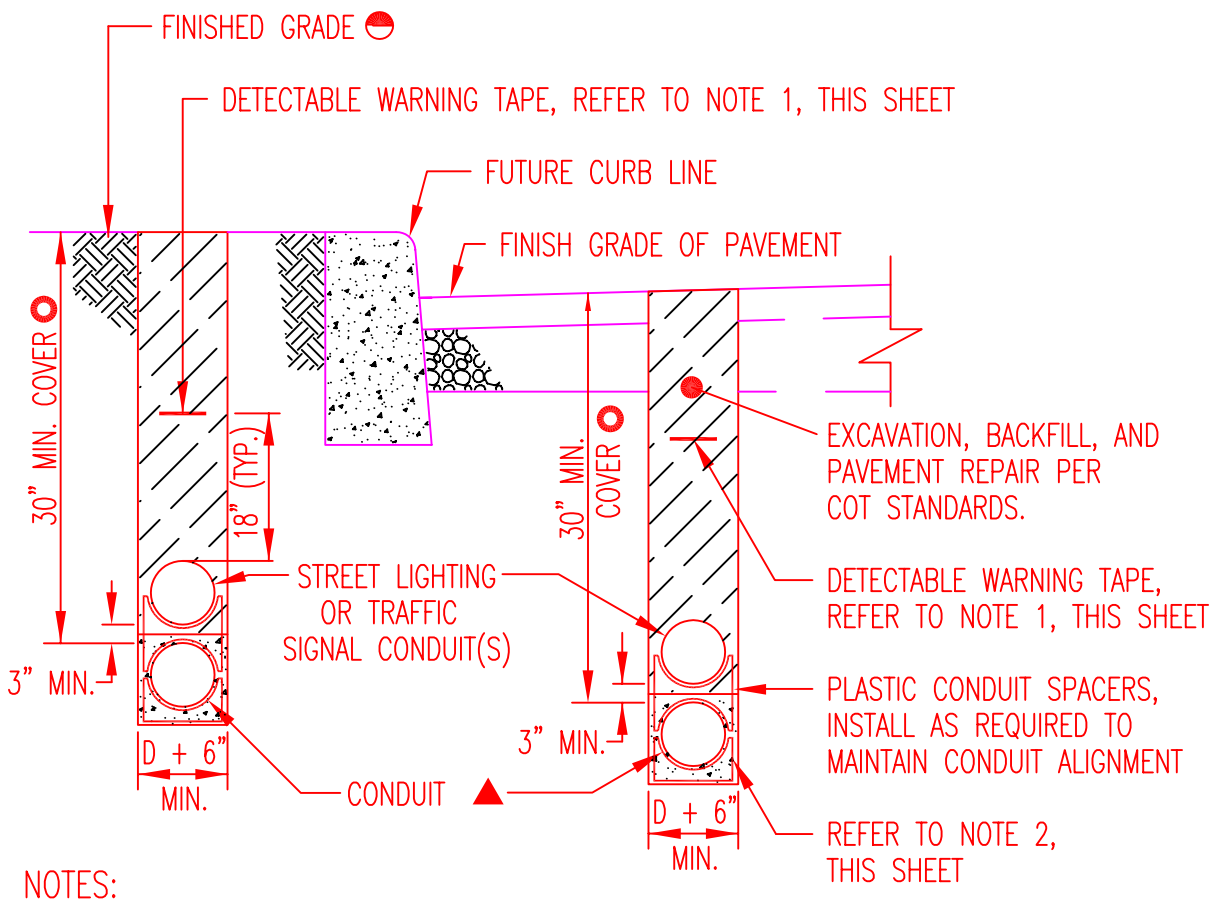

NOTES:

1. INSTALL WARNING TAPE FOR THE FIBER OPTIC SYSTEM AND THE STREET LIGHTING / TRAFFIC SIGNAL CONDUITS, SIDE BY SIDE AT THE SPECIFIED DEPTH.

2. AT STREET CROSSINGS, WHERE THE STREET LIGHTING / TRAFFIC SIGNAL CONDUIT IS ENCASED IN CONCRETE, ENCASE FO CONDUIT IN CLASS B CONCRETE.

3. EXCAVATION, BEDDING, SHADING, BACKFILL, AND COMPACTION OF THE STREET LIGHTING AND TRAFFIC SIGNAL CONDUITS SHALL BE IN ACCORDANCE WITH THE PIMA COUNTY/CITY OF TUCSON STANDARD SPECIFICATIONS AND DETAILS FOR PUBLIC IMPROVMENT.

TYPE 5: FO CONDUIT INSTALLED WITH STREET LIGHTING OR TRAFFIC SIGNAL CONDUIT

REFER TO SHEET 6 OF 6 FOR GENERAL NOTES AND SYMBOLS.

GENERAL NOTES:

1. FOR ALL CONDUIT ON CITY REAL PROPERTY, AND FOR CONDUIT IN THE ROADWAY RIGHT-OF-WAY WHERE REQUIRED BY THE CITY OF TUCSON/PIMA COUNTY SPECIFICATIONS AND DETAILS, AND WHERE SPECIFICALLY CALLED OUT ON THE DRAWINGS, CONDUIT SHALL BE ENCASED IN CLASS B PORTLAND CEMENT CONCRETE.
2. CONSTRUCTION STAKING SHALL BE IN ACCORDANCE WITH PROJECT REQUIREMENTS.
3. SHORING AND / OR BRACING SHALL CONFORM TO OSHA REQUIREMENTS.
4. REFER TO SPECIFICATIONS FOR THE REQUIREMENTS FOR THE DETECTABLE WARNING TAPE.

LEGEND:

D	OUTSIDE DIAMETER OF CONDUIT.
▲	CONDUIT SHALL BE 4" IN DIAMETER UNLESS OTHERWISE NOTED ON THE PLANS.
◓	THE LOWER OF EXISTING OR FUTURE FINISHED GRADE.
■	PAVEMENT PATCHING SHALL CONFORM WITH THE REQUIREMENTS OF PIMA COUNTY / CITY OF TUCSON STANDARD DETAIL FOR PUBLIC IMPROVEMENTS, STANDARD DETAIL No. 216, AND THE CONSTRUCTION DOCUMENTS.
○	36" MINIMUM COVER, AND A MINIMUM OF 24" BELOW THE LIMITS OF SUBGRADE SCARIFICATION.
	NATIVE UNDISTURBED SOIL.
	BACKFILL MATERIAL AND COMPACTION SHALL BE IN ACCORDANCE WITH THE REQUIREMENTS OF THE AUTHORITY THAT HAS JURISDICTION OVER THE RIGHT-OF-WAY, AND PROJECT SPECIFICATIONS.
	CONTROLLED LOW-STRENGTH MATERIAL (CLSM), REFER TO TABLE 975-2 TITLED MIX PROPORTIONS FOR CONTROLLED LOW STRENGTH MATERIAL.
	AGGREGATE BEDDING MATERIAL, REFER TO SPECIFICATIONS.
	BACKFILL, BEDDING AND SHADING MATERIAL OF A JOINT TRENCH TO BE CONTROLLED BY THE SPECIFICATIONS AND DETAILS OF THE AGENCY RESPONSIBLE FOR THE UTILITY.

ISSUED:		STANDARD DETAIL		CITY OF TUCSON	DETAIL NO.:
JAN 1998					FO-100
REVISED:		CONDUIT INSTALLATION			NOT TO SCALE
April 2007					SHEET 6 OF 6

PULLBOX INSTALLATION NOTES

1. PREPARE EXCAVATION APPROXIMATELY 6 INCHES DEEPER THAN OVERALL HEIGHT OF THE ENCLOSURE. THE LENGTH AND WIDTH OF THE EXCAVATION SHALL BE BETWEEN 8 INCHES AND 10 INCHES LARGER THAN THE PULLBOX.

2. PLACE APPROXIMATELY 8 TO 10 INCHESS OF COMPACTED 3/4" GRAVEL IN THE EXCAVATION. LEVEL THE GRAVEL TO BRING THE PULLBOX UP TO THE APPROPRIATE GRADE.

3. PLACE THE PULLBOX IN THE EXCAVATION, CENTERING IT.

4. WITH LID INSTALLED ON THE BOX, PLACE SELECTED BACKFILL INTO THE EXCAVATION IN 8-INCH LIFTS, COMPACTING MANUALLY.

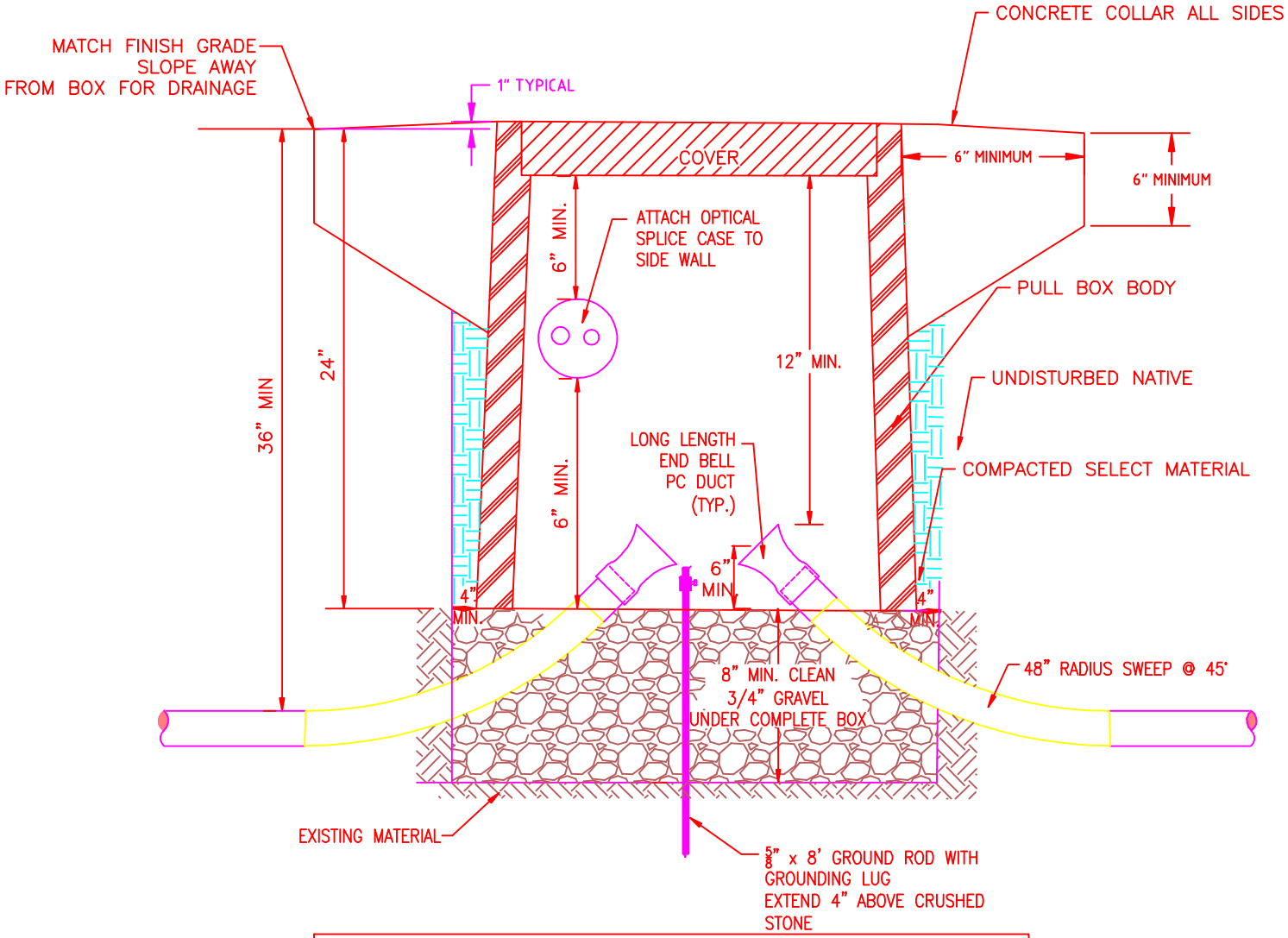

USE JACKMOONS AND INNERDUCT PLUGS IN THE BELL ENDS
TYPICAL OF ALL CONDUITS IN BOX
REFER TO MANUFACTURERS INSTALLATION RECOMMENDATIONS

PEM-3048

Grade Level Buried Cable Enclosure

Rectangular shape of this enclosure provides maximum usable working area. The unit is designed to accept the new larger splice enclosures. The unit is molded of a high density polyethylene, which has excellent environmental resistance. Reinforcing ribs are designed into the enclosure to withstand backfill operations. Flange around base prevents frost heaving or tilting. This strong but lightweight unit can be handled by one or two people. This results in a considerable savings in installation labor over concrete vaults. Handling equipment is eliminated and allows easy delivery to the construction site. Units come fully assembled and can be nested for a minimum amount of warehouse storage space. The cover is secured to the base with two captive bolts. Units are offered in green molded-in color. Units are shipped palletized for easy handling and storage. Optional split lid is also available for the top. Additional logos are available upon request.

To order specify:

PEM-3048	— Enclosure with plastic cover.
Identification:	(ELECTRIC, CATV, TELEPHONE, IRRIGATION)
Standard:	— (H) Hex Head Bolts.
Options:	— (X) 3/8 - 16 Penta Head Bolts.
	— (B) Button Head Bolts.
	— (SL) Steel Lid.
	— (FL) Fiberglass Lid.
	— (SPLIT) 2 Piece Lid.
Example:	— PEM-3048H Enclosure with plastic cover and S/S hex head bolts.

Test Results

Verticle load on 10x10 center of lid.
5000 Lbs.
No Breakage.

Recommendations on the application of our products are based on the best available technical data and are offered as a suggestion only. Each user of the material should make his own tests to determine the material's suitability for his own particular use.

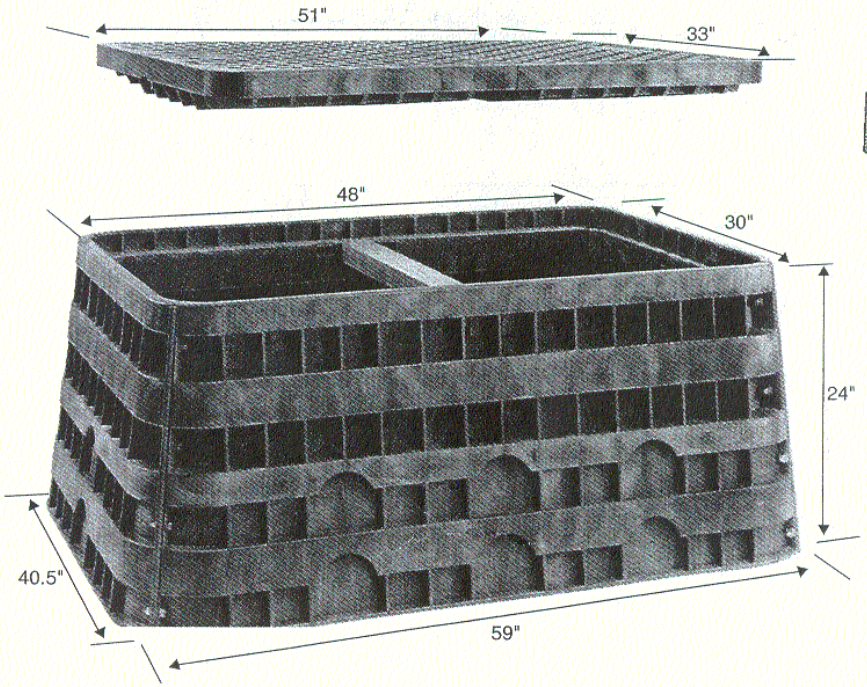

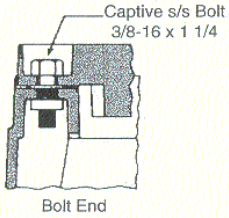

PenCell PLASTICS, INC.

P.O. Box 309
New Egypt, N.J. 08533-0309
(800) 257-9448 • (609) 758-3201 • Fax: (609) 758-7945

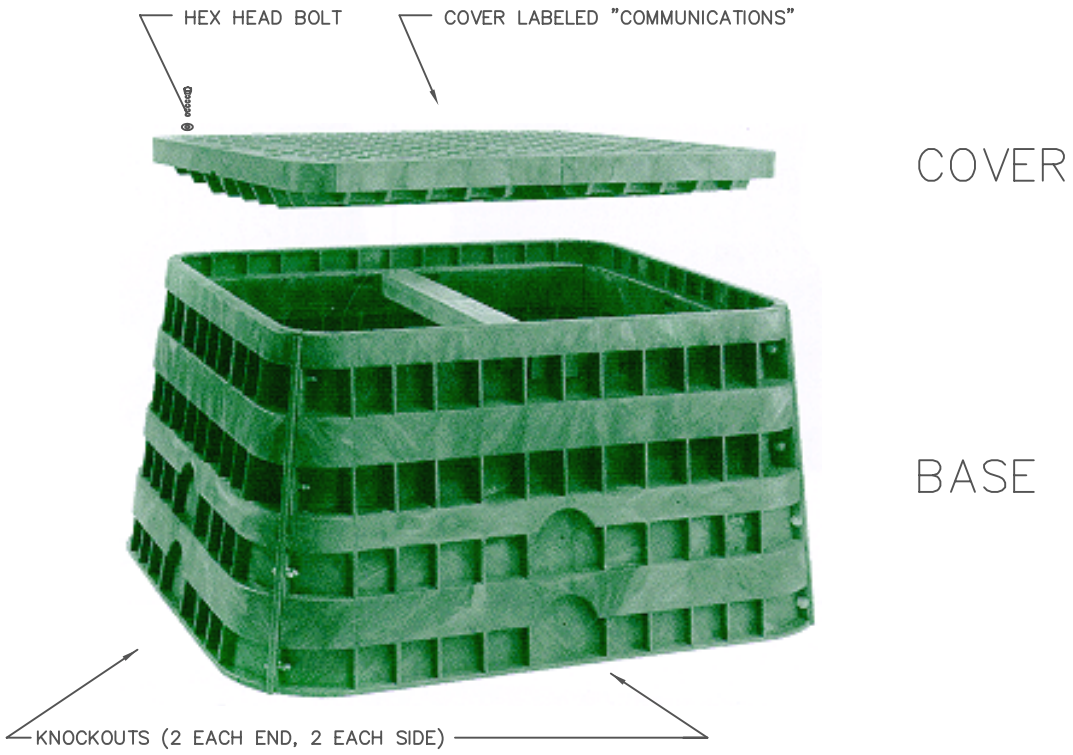

GENERAL NOTES

1. BASE AND COVER SHALL BE GRAY IN COLOR.
2. BASE SHALL BE MOLDED HIGH DENSITY POLYETHYLENE.
3. COVER SHALL BE CAST POLYMER CONCRETE.
4. PULLBOX SHALL BE OF THE DIMENSIONS 30" WIDTH BY 48" LENGTH BY 24" DEPTH.
5. COVER SHALL BE FACTORY EMBOSSED WITH "COMMUNICATIONS".
6. COVER SHALL BE SECURED BY 3/8-16 HEX HEAD BOLTS.
7. PULLBOX MAY BE EXTENDED BY MEANS OF SPACER.
8. SPACER SHALL BE 6" IN DEPTH.

ISSUED:		STANDARD DETAIL		CITY OF TUCSON	DETAIL NO.:
NOV 2000					FO–300
REVISED:		FIBER OPTIC PULLBOX			NOT TO SCALE
April 2007					General Notes

City Architecture & Engineering Division Project Execution Requirements

All Local Area network (LAN) and Wide Area Network (WAN) projects shall be designed by a Registered Communications Distribution Designer (RCDD) with a current Building Industry Consulting Service International (BICSI) registration number stamp.

Communications/Data drawings shall be identified by T series numbers in the approved Construction Drawings.

The Communications/Data section of specifications manual shall be numbered separately and distinctly from other sections. Format shall follow the section entitled "SECTION 17000 – TELECOMMUNICATIONS INFRASTRUCTURE". "DETAILS" also have been incorporated into City of Tucson (City) requirements for Architecture and Engineering projects.

As part of each submittal, Communications Engineering (CE) shall be furnished with a tabulation of the following system information.

(A) The station and offset of each pull box and vault.
(B) The total length of each conduit run between pulling points.
(C) The total degree of bends of all vertical and horizontal bends between pulling points.
(D) The latitude and longitude of the centerline of the pull boxes and vaults.
(E) Specific stub-out locations proposed for each pullbox and vault.

Plans depicting installations interior to buildings shall be prepared using the drafting standards of the department responsible for the project. Plans depicting installations exterior to buildings shall be drafted in accordance with Pima County/City of Tucson Standard Detail Numbers 100 and 101. The conduit shall be clearly indicated with respect to its horizontal and vertical alignment. The locations of all pull boxes and vaults shall be indicated by its station and offset. The identification number of each pull box and vault shall be included on the plans.

Any pathway, conduit system, horizontal or riser cable, copper or optical fiber installed in plenum spaces shall be plenum rated.

All drawings shall include the following general notes:

WIDE AREA NETWORK (WAN) CONDUIT SYSTEM GENERAL NOTES:

1. All existing City fiber facilities shall be protected in-place unless specifically noted otherwise on the construction documents. No existing City fiber optic conduit system or cable shall be altered in any way without the written approval of the City Communications Engineering Division.

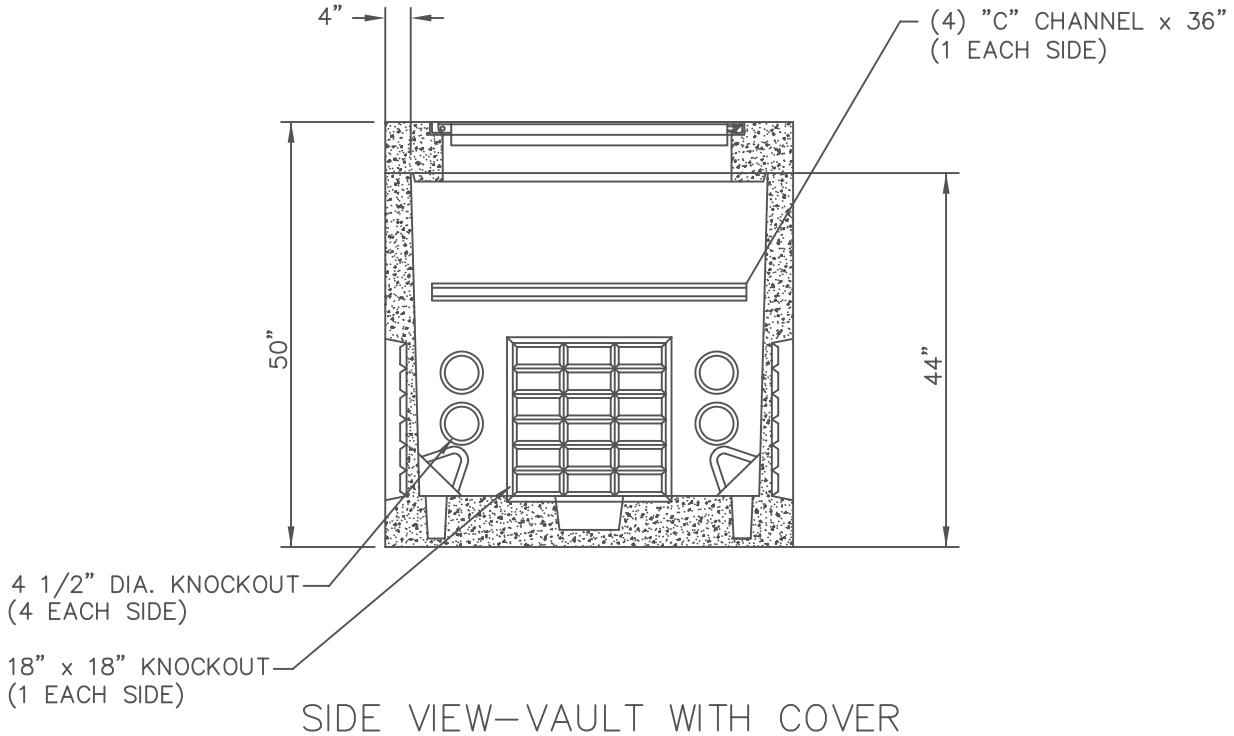

SIDE VIEW–VAULT WITH COVER

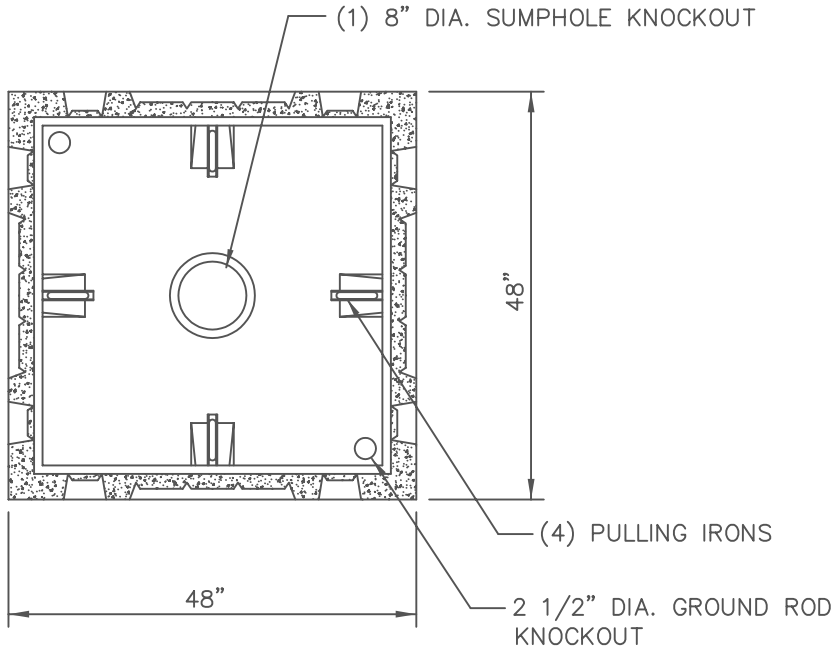

TOP VIEW–VAULT WITHOUT COVER

ISSUED:		STANDARD DETAIL			DETAIL NO.:
NOV 2000					FO–301
REVISED:		FIBER OPTIC VAULT			NOT TO SCALE
April 2007					SHEET 1 OF 3

TOP VIEW–VAULT COVER WITH HINGED LID

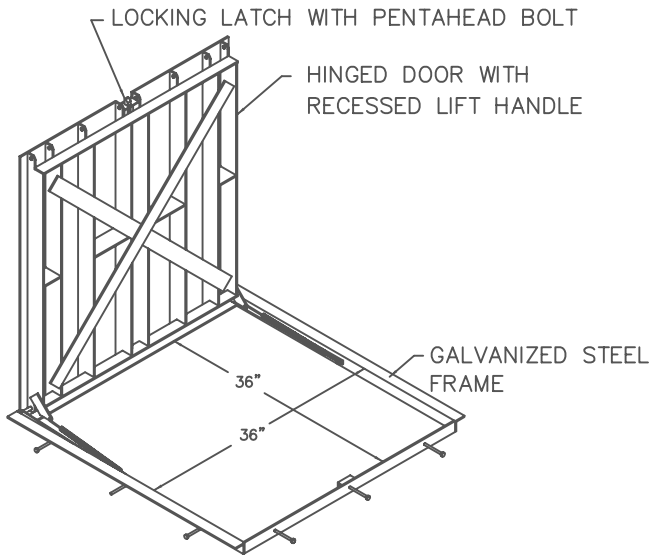

RELIEF VIEW–HINGED LOCKING LID

ISSUED:		STANDARD DETAIL			DETAIL NO.:
NOV 2000					FO–301
REVISED:		FIBER OPTIC VAULT			NOT TO SCALE
April 2007					SHEET 2 OF 3

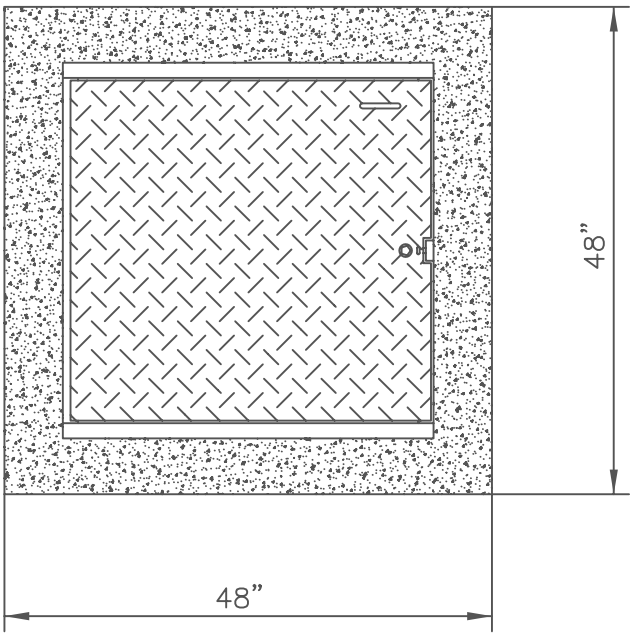

TOP VIEW—VAULT COVER WITH HINGED LID

TOP VIEW- VAULT COVER

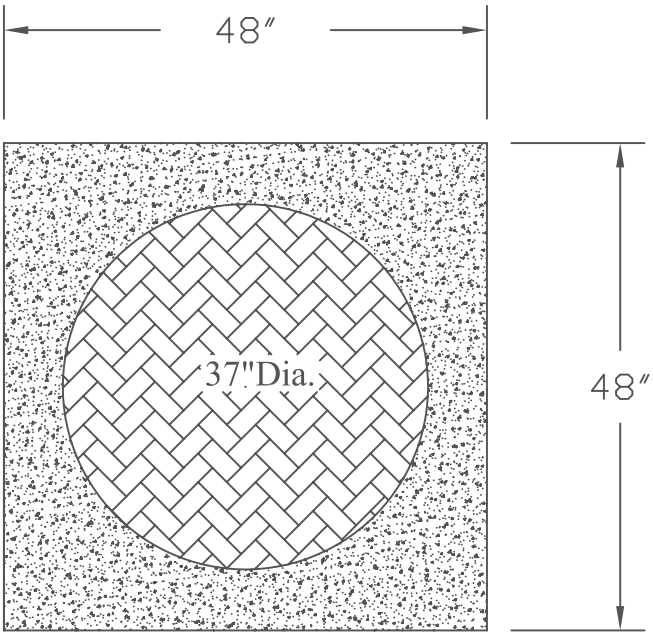

ISSUED:		STANDARD DETAIL			DETAIL NO.:
NOV 2000					FO—301
REVISED:		FIBER OPTIC VAULT			NOT TO SCALE
April 2007					SHEET 3 OF 3

PenCell

Series PEM-30 • Grade Level Buried Cable Enclosure

To order complete units (enclosure and cover):

PEM-3036
Enclosure with high density polyethylene lid.

PEM-3048
Enclosure with high density polyethylene lid.

PEM-3060
Enclosure with high density polyethylene lid.

To order various covers:

PL - Plastic lid
PCL - Polymer concrete lid
SPLIT - 2 Piece lid

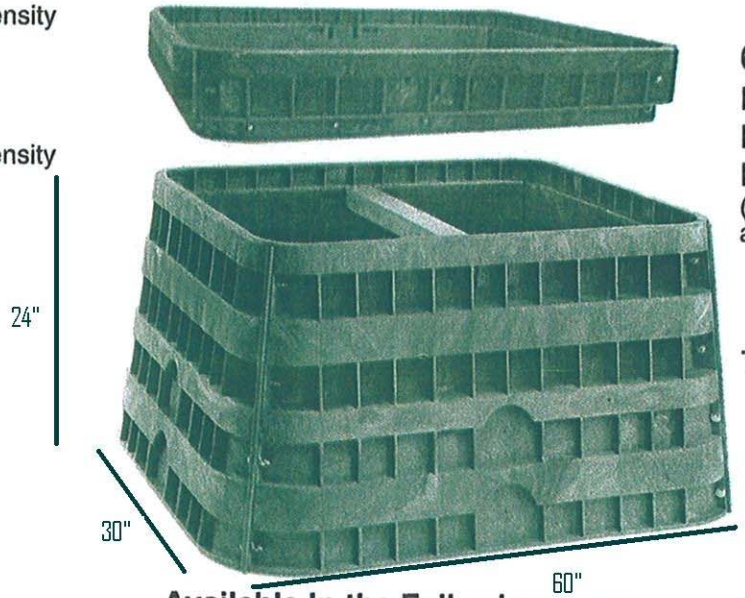

6 INCH SPACER
PEM-3036-6
PEM-3048-6
PEM-3060-6
(All spacers can be stacked for additional depth)

To order various bases:

3036-GS
3048-GS
3060-GS

Available In the Following Sizes

Part No.	Description	Dimensions in inches (centimeters)			Weight in Lbs. (kilograms)
		Width	Length	Depth	
PEM-3036	Box & Lid	30" (76.2cm)	36" (91.4cm)	24" (61cm)	115 (52.1kg)
PEM-3048	Box & Lid	30" (76.2cm)	48" (121.9cm)	24" (61cm)	140 (63.5kg)
PEM-3060	Box & Lid	30" (76.2cm)	60" (121.9cm)	24" (61cm)	160 (72.5kg)

To order specify:

Standard: (H) Hex Head Bolts
Options: (X) 3/8-16 Penta Head Bolts
(B) Button Head Bolts

Example: PEM-3036H
Enclosure with H.D. polyethylene lid and hex head bolts.

Identification: (Electric, CATV, Telephone, Water, Irrigation, Communications)
Custom logos on request. Contact factory or agent.

This unit is molded of high density polyethylene. The sidewall design prevents frost heaving. Units can be nested for a minimum amount of warehouse storage space. Units are offered in green molded-in color.

Recommendations on the application of our products are based on best available technical data and are offered as a suggestion only. Each user of the material should make his own tests to determine the material's suitability for his own particular use.

PenCell PLASTICS, INC.
P.O. Box 309
New Egypt, N.J. 08533-0309
(800) 257-9448 • (609) 758-3201 • Fax: (609) 758-7945 • www.pencell.com

2. All new City fiber conduit systems shall cleaned and mandrel tested by the contractor in the presence of a Communications Engineering (CE) representative. Provide 72 hour advance notice to Bobby Sweet at 419-3459.

3. Conduit ends shall be capped when work is not in progress. RGS sweeps terminating in pull boxes shall be plugged.

4. It shall be the sole responsibility of the Contractor to repair all existing City conduit systems and appurtenances damaged by construction. Immediate notification of any damaged existing conduit system, whether occupied or unoccupied, shall be reported to the Construction Administrator and the Communication Maintenance Division, at 791-4634 Monday through Friday between 7:30am to 4:30pm or 791-4830 after hours and weekends.

5. For repairs of occupied City fiber conduit systems, the Contractor shall repair, clean and mandrel test the conduit systems in the presence of a Communication Maintenance representative. The contractor shall install, re-terminate, and test new approved optical fiber cable as directed by the Communication Maintenance representative. The Contractor shall present such representatives with test results, in booklet form and ASCII format, with one licensed version of the original test equipment software, which will allow the City to view the test results as the software was designed. Acceptance of the work shall not occur before all documentation, test results, certification of test results and operation by such representatives has been approved.

6. For repairs of unoccupied City fiber conduit systems, the Contractor shall repair, clean and mandrel test the conduit systems in the presence of a Communication Maintenance representative.

7. All pull boxes/vaults shall be provided with a 5/8” by eight foot ground rod and acorn, driven vertically in the corner with six inches of rod exposed above the top of the drainage rock.

8. The absolute maximum length between pull boxes or vaults shall not exceed 600 feet.

9. Communications conduit between pull boxes/vaults shall have a maximum deflection of 270 degrees.

10. Communications conduit shall be buried a minimum of 36" to the top of the conduit below finish grade.

11. Communications conduit shall be 4" schedule 40 PVC.

12. All bends 45 degrees and larger shall be rigid galvanized steel sweeps 12 times the conduit diameter or 48" radius, double wrapped with 10 mil PVC tape.

TABLE OF CONTENTS

I. SECTION 320000 GENERAL

II. SECTION 320010 SITE DISCRIPTION

III. SECTION 320015 SITE ASSESSMENT, PROPERTY ACQUISITION & DESIGN ISSUES

IV. SECTION 320020 VEGETATION SURVEY

V. SECTION 320030 DRAINAGE

VI. SECTION 320040 HISTORIC RESOURCE SURVEY

VII. SECTION 321200 PAVING AND SURFACING

VIII. SECTION 323000 FENCES GATES & HARDWARE

IX. SECTION 329000 LANDSCAPE

I. SECTION 320000 GENERAL

DESIGN CRITERIA

This document sets forth the design and construction criteria to be used for the site design for the facility.

The site design description of the facility consisting of the design of the roads, a storm water runoff detention or retention pond, a sanitary disposal system, a storm drainage system consisting of diversion ditches, culverts, storm drains, and outlet works for the storm water detention/retention

pond, site fencing. Erosion control practices should be included both during construction and after construction is completed. The Site Plan shall be based on a survey or topographical maps of sufficient accuracy. When aerial survey will not provide sufficient vertical and horizontal accuracy, the additional land survey will be required for the project.

The City of Tucson typically contracts for site surveys based upon coordination with design consultants.

Site Lighting – see Division 26 – Electrical.

Utility Trenching – Location of utilities shall be coordinated with the City Project Manager and public utility recorded easements. Blue stake and potholing may be required for existing utility locations. OSHA requirements for trenching also apply to potholing. Design of the new services is to be determined no later than the Design Development Phase after loads have been determined for the project. Most projects will require design of LAN/WAN service through the City of Tucson IT Department and cost will be included in the project budget. TEP will not provide the final power design until construction documents have been submitted to them. rev11/29/13

Irrigation and Landscape Design- The Parks and Recreation Department has prepared Design and Construction Standards for Irrigation and Landscaping. For a copy of these standards, please contact the Parks and Recreation Department, landscape office at 791-4873. rev11/29/13

Irrigation Systems – All Automatic Irrigation Systems are to be installed using electric power to the controller, water service tap and sub-meter to main, or any appurtenances required for a complete system. Plans showing all aspects of the system shall be drawn, including power source. Consider solar for an electric power source. rev11/29/13

Landscaping – Use existing and native plants when possible. Low water plant material is preferred. Cacti or native plants which could be injurious to pedestrians shall not be used near pedestrian areas. rev11/29/13

Shrubs shall be spaced and chosen to prevent growth onto sidewalks and streets.
Trees are to be at least 15-gallon size. Larger trees are to be considered when solar screening is a project requirement. Caution shall be used when planting trees under or near power lines, site and street lighting. Each utility company has their own requirements for planting in their easements and near their infrastructure. Not all are the same, but all must be adhered to for project approval. The planting design shall conform to the requirements of all utilities for setbacks and heights.
rev11/29/13

Vehicle Gate and Gate Operator – Vehicle Gates require a Fire Department approved Lock Box and Fire Department emergency vehicle dimension clearance and turning radius approval. Gate

operators require manual release. Wheels for the gate shall have a wearing cycle that exceeds estimated use by at least twice the load count for a five year period. The size and weight of the gate and frequency of use should be considered when sizing the operator. Gate tracks shall be set in concrete and concrete aprons at approaches shall be used for all vehicle gates.

Alternative Transportation – Bicycling – Bicycle racks/lockers, changing rooms, and employee showers will be reviewed as required for each project.
Bus – Consideration shall be given to the location of the main public entrance of a facility and its distance to the closest bus drop, if any, for convenient access to the City facility. A bus drop-off is desired by the disability community to be within 250' of a City facility.

Accessible Routes (ADA) - City facilities, as public buildings, shall be designed and constructed for accessibility and use by the disabled. Refer to Division 01, General Conditions, ADA Section 013500.

Design Consultants should determine, early in the design process, the establishment of Accessible Routes.

Water Harvesting - Provide a narrative description as to how the project will meet the Tucson code requirements for water harvesting as described in Appendix A of the City of Tucson Water Harvesting Manual, which is available at http://www.dot.ci.tucson.az.us/stormwater/downloads/2006WaterHarvesting.pdf . The Project manager will discuss with the consultant whether to provide a cost/benefit analysis of additional water harvesting opportunities, depending on the project. The cost/benefit analysis is not intended to be a detailed study but should provide enough cost information for the City to make informed decisions whether or not to pursue further water harvesting opportunities on the project. Costs include construction costs, and probable operations and maintenance costs. rev11/29/13

II. SECTION 320010 SITE DISCRIPTION

Unless the following items are in other portions of the documents (survey, soils report, cover sheet, etc.), include in a site description, the following, if applicable:

Site location
Legal description
Site description
Unique climatic conditions, such as microclimates, prevailing winds, slope exposures.
Easements
Utilities
Existing natural conditions assessments

Environmental assessments, such as native Plant Preservation Inventory and Plan and/or Clean Water Act compliance
Existing materials assessments
Hazardous materials assessments
Subsurface investigations
Demolition and/or Structure moving investigations
Site remediation recommendations
Archaeological or cultural resources issues
Existing slope
Existing drainage rev11/29/13

With references to the following, if applicable:

- Codes
- All divisions of the City of Tucson Land Use Code
- Specifications and Standards
- City and County ordinances
- State and local ordinances
- Federal Register
- Geotechnical Reports
- Other governmental authority requirements
- Hazardous material tests
- Structural assessments rev11/29/13

III. SECTION 320015 SITE ASSESSMENT, PROPERTY ACQUISITION & DESIGN ISSUES

For projects that involve new construction or changes to the land surface,

Provide an environmental overview of the site to identify environmental or health and safety issues, including archaeological or cultural resources issues. Coordinate with the City of Tucson Project Manager to determine whose scope of work the assessment is to be performed. (City of Tucson sometimes directly contracts to a third party under Architecture and Engineering, Environmental Services, or the Historic Preservation Office.) The purpose of this overview is to ensure due diligence is given to the site to provide insight into possible hidden issues. rev11/29/13

If the following site features exist, they are to be identified and evaluated through an Environmental Site Assessment:

Dry wells

Active or inactive water well
Underground or above ground storage tanks
Fuel/chemicals/paints/hazardous material storage areas
Wash racks
Oil/water separators
Septic tanks
Contaminated soil
Contaminated groundwater
Solid Waste disposal areas
Subsided areas
Disturbed Soil
Unexplained dead vegetation
Pits, sumps, or pools of waste liquid
Stored drums or other chemical containers

If the site has any of these features, contact the City of Tucson Environmental Services / utility Services Department.

If the site is undisturbed land, an assessment to determine if the land provides habitat for state or federal, threatened, endangered, protected or regulated plant or animal species. Most determinations are good for one year. See Section 320020, Vegetation Survey below. rev11/29/13

Demolition of Existing Structure:
Ask the City of Tucson project manager for surveys for asbestos containing materials, lead base paint, and mold. All demolition contractors must submit the National Emissions Standards for Hazardous Air Pollutants (NESHAP) notice required by the Clean Air Act to the Pima County Air Quality Department. Personnel Safety should be addressed through OSHA for the protection and training of demolition workers.

Renovation of Existing Structure:

Ask the City of Tucson project manager for surveys for asbestos containing materials, lead base paint, and mold. All demolition contractors must submit the National Emissions Standards for Hazardous Air Pollutants (NESHAP) notice required by the Clean Air Act to the Pima County Air Quality Department. Personnel Safety should be addressed through OSHA for the protection and training of demolition workers.

Zoning:

Ask the City of Tucson project manager to contact the client if the site will require a change in zoning. Note: if the site was subject to environmental clean up or abatement, some property uses

may be restricted. Any necessary re-zoning should be considered early in the project. City of Tucson Project Manager is to advise the client of the re0zoning approval path.

Disturbance of natural drainage areas:

If the construction activities include the excavation, damming, disturbance or performance of other activities in a natural drainage area such as a wash or watercourse, and/or in man made structures e.g., pipes, ponds or canals, contact the Department of Development Services for restrictions and requirements.

When completed, if the project will require maintenance or other activities in a natural drainage area such as a wash or watercourse, and/or in man made structures e.g., pipes, ponds or canals, contact the Department of Development Services for restrictions and requirements. Even though this is a client operations issue, note that the project design can affect how maintenance is performed. Coordinate new development with the City of Tucson WASH Ordinance, FEMA floodplain setback requirements and other drainage/waterway agencies which regulate development impacts on some watercourses. rev11/29/13

Hazardous and Solid Waste Storage Facilities:

This section pertains to facilities that accumulate hazardous waste. (fuels, petroleum products, thinner, waste paint enamel, paint pigments, used oil, etc. Lead/acid batteries, spent mercury containing lamps, rechargeable or NiCad batteries. This includes toxic, corrosive, ignitable, or reactive materials in containers of 5 gallons or more.)
Ensure a covered storage area that is designed with berms in at least a 4' X 4' area to accommodate secondary containment pallets for each waste stream. Storage area must be sited away from washes/gullies, retention basins, drywells, etc.

If the facility stores petroleum products in containers 55 gallons or greater with an aggregate quantity that exceeds 1,320 gallons above ground; or 42,000 gallons or more underground, prior to operating, the facility must have an approved Spill Prevention, Control and Countermeasure Plan (SPCCP). The SPCCP requires a Professional Engineer (PE) certification. Fuel operations at most facilities (except Aviation) are managed by the Fleet Services Division of the Department of General Services.

If janitorial products will be stored onsite to clean the facility, ensure storage area can accommodate at least 15 gallons and shelving is not higher than 5ft. Include a mop sink, water supply and sanitary sewer connection.

If pesticides will be stored at this facility, ensure that a covered secured storage area will accommodate up to 60 gallons of pesticides and equipment and product containers. Ensure the area is designed to include adequate lighting, access to water and ventilation.

If there is an equipment or vehicle washing operation to occur at this facility, ensure an adequately sized sufficiently sloped wash pad with an oil/water separator and connection to a sanitary sewer.

If there is a parts washing operation to be performed at this facility, ensure a 6' X 3' minimum space for equipment. Provide electrical and ventilation requirements if the parts washing tank is heated or uses petroleum hydrocarbons.

If the facility uses large amounts of chemicals such as toxic gases, oxidizers or flammables, prepare a risk management plan that include a hazard assessment, accident prevention program and an emergency response program. The list of chemicals and quantities that are regulated are found at 40CFR Part 68.130. Historically the chemical of concern is found in City operations is chlorine in water and wastewater treatment plants.

Air Quality / Dust Control:

If construction involves earthmoving activities more than 1/10 of an acre, the project must have an air quality permit and a dust control plan approved by Pima County Air Quality Department. Copies of the permits must be submitted to the City of Tucson project manager by the contractor prior to starting the permitted activities.

Hazardous Waste Disposal:

If the construction activities themselves disturb or generate hazardous or solid waste, including asbestos containing material, paints, chemicals and liquid wastes (including pesticides), or in the storage or disposal of hazardous waste or materials, the contractor must have procedures for the proper handling, storage, use, disposal and cleanup of hazardous materials and waste.
Note: Hazardous waste can only be disposed of or treated at an authorized facility.

IV. SECTION 320020 VEGETATION SURVEY

Each project must have a Vegetation Survey identifying the protected plants or plants to remain. See the City of Tucson Land Use Code, Article 3, Division 8, Native Plant Preservation.

V. SECTION 320030 DRAINAGE

Contact the Project Manager to determine if the project shall comply with the general policies relating to drainage and flood control. The City of Tucson Flood Control Division shall be contacted prior to drainage report, drainage statement or an application for the Floodplain Use Permit is submitted to the City Engineer. rev11/29/13
The tentative or Final Plats, Site Plans, and Development Plans that are submitted to the City of Tucson for review and approval shall clearly show the floodplain limits.
The design criteria shall define:

- Site drainage description
- Design methods
- Site coefficients
- Materials used

VI. SECTION 320040 HISTORIC RESOURCE SURVEY

Please refer to the City of Tucson Urban Planning and Design Department for the latest information on the Cultural Resource Review Process. A Cultural Resource Review Process is required for all projects where there will be excavations of any kind. The City Project Manager is to coordinate the preparation for a request of a field survey and follow a Cultural Resource Clearance Checklist provided by the Historical & Cultural Resources Division of the City of Tucson Urban Planning and Design Department, 345 E. Toole Ave., 791-4505.

VII. SECTION 32500 PAVING AND SURFACING

Driveways to receive a minimum of 2” of asphalt concrete over 4” ABC.

The preference is to have no gravel in mechanical yards and to use asphalt, concrete, or permeable concrete where possible. rev11/29/13

The access roads and the parking areas shall be designed for the vehicles which selection will be based on detailed programming process for the project. The design criteria shall clearly define:

- Size and weights of vehicles, axle loads and dimensions
- Turning radii
- Vertical and horizontal clearances

- Frequency of traffic

The parking areas shall be of asphalt, concrete, or permeable concrete pavement where possible - budget permitting. rev11/29/13

GRADING:

The site grading shall accomplish proper site drainage. The suggested maximum cut and fill slopes should be 2 horizontal to 1 vertical. The suggested minimum longitudinal slope for most drainage swales should be 0.5 percent. Contact the Project Manager to discuss site drainage using the geotechnical reports and actual soil conditions for maximum and minimum cut and fill slopes for each site. rev11/29/13

Where ditch velocities will cause erosion, install; riprap, erosion control blankets with seeding and/or gabions. rev11/29/13

Access must always be provided for maintenance and emergency vehicles.

For ADA parking lot requirements, see Division 01 General Requirements, V. section 013500, Special Procedures.

Urban Heat Island Reduction Technologies such as concrete pervious paving, appropriate tree planting and water harvesting are to be considered early in design so the project manager can get input from the owner and the A&E design team prior to proceeding. rev11/29/13

VIII. SECTION 323000 FENCES GATES & HARDWARE

Fencing: use commercial grade, 6-0” or 8’-0” from highest finish grade.

Fencing, gates, and similar work shall be designed to discourage possible access by vandals, burglars, etc. to secure areas and rooftops. rev11/29/13

Fences and gates shall be designed for long durability, security, and low maintenance.

Chain Link Fence:
Line Posts 2 3/8" Schedule 40 X 10'
Corner Posts 2 7/8" Schedule 40 X 10'

Gate Posts 4" Schedule 40 X 10'
Fabric 9 Gage GAW (galvanized)
All fittings are galvanized steel

IX. SECTION 329000 LANDSCAPE

Select planting based on low water use. Note: Higher water use plantings can be used in certain areas. See the City of Tucson Code which allows an area percentage for an oasis accenting public buildings. Coordinate the oasis idea with the project manager early in design. rev11/29/13

Landscape and irrigation should be designed to be energy conserving, low water use, for low operations and minimal maintenance costs. rev11/29/13

Hardscape, planting, and irrigation shall be designed so that it protects the public health, safety and welfare. As an example, pines with needles should be planted away from "slip and fall" situations on paving surfaces, i.e.: pedestrian ramps, ramped driveways, tennis courts, etc. rev11/29/13

Landscaping: Use existing native plants and mature low-water use/drought tolerant plants when possible, (follow Native Plant Ordinance procedure). For new designs without any existing vegetation, choose plants on the Arizona Department of Water Resource (ADWR) Plant List. rev11/29/13

Cacti and other thorny native, or non-native, plants shall be placed in areas away from designed pedestrian, walking or activity areas. Areas designed for pedestrian use having impervious surfaces (i.e., concrete or asphalt, etc) shall have a minimum of 50% shade coverage, calculated by using the shade provided by the mature canopy of trees in the month of July. rev11/29/13

Plant Selection: Plant palettes shall reflect species diversity over selection of two or three species. Plant selection shall take into consideration growth habit of the plant to ensure planting the right plant in the right location (ie.: not planting large trees under power lines or next to street lights, nor spreading shrubs close to sidewalks, etc). Trees without root barrier devices shall be planted a minimum of ten feet away from any buried utility. Minimum plant sizes: (a) Trees: fifteen (15) gallon; (b) shrubs: five (5) gallon; (c) groundcover: one (1) gallon and (d) accents: as appropriate. Root barriers shall be used where trees are planted within 5 feet of paved areas. rev11/29/13

Irrigation: Systems shall utilize smart controllers, and when possible, connected to weather stations or rain sensors. Reduce potable water use by using reclaimed water when available. Landscape design shall incorporate maximum water harvesting principles (i.e., basin configurations and connectivity, mulching applications, see City of Tucson Water Harvesting Manual, etc). Order of priority of water harvesting application: (1) direct all ground-surface run-off to planting areas; (2) direct roof run-off to planting areas, (3) collect roof run-off in cisterns to be utilized as part of irrigation system, (4) when available, explore utilizing HVAC condensation as part of roof run-off collection.

Maintenance: Maintenance and pruning practices shall follow guidelines of the International Society of Arboriculture (ISA), policies set forth by City of Tucson Transportation and/or Parks and Recreation Departments, and best practices as set forth by the horticulture industry.

- Trees to be planted away from flagpoles.
- Trees to be planted away from sidewalks with shading structures.
- Trees to be planted away from area pole lights.
- Hedges, cactus, etc. can be used to buffer walls from graffiti.
- Trees with leaves and needles to be planted away from roofs/ gutters.
- Trees with needles to be planted away from hard pavements (slip and fall situations).
- Visually opaque plant materials to buffer City areas from residential areas (where appropriate to the site context and site development).
- Trees can be used effectively to shade the building, particularly on the West façade.
- Review landscape plans with City of Tucson Department of Urban Planning.
- Irrigation lines and spray heads should be a minimum of 5 feet away from building walls, foundations, etc.

rev11/29/13

INTRODUCTION TO SOLAR READINESS GUIDELINES FOR CITY BUILDINGS

These guidelines were drafted by CH2MHill, consultants hired through the City of Tucson's Solar America Cities grant in 2010. The intention is to integrate these solar readiness guidelines into the Architecture & Engineering (A&E) Standards and Project Managers Manual and place them on the A&E website so that all future City-funded buildings will be solar ready.

In order to ensure that New and Renovated City of Tucson Buildings comply with the Mayor and Council required Sustainable Energy Standard and specifically the requirement that at least 5% of the buildings energy usage be offset by solar energy utilization we have issued these Solar Readiness Guidelines for City Buildings. In addition to the 5% energy offset it is the City of Tucson's desire to have all buildings designed and built for future solar energy utilization. These guidelines provide direction for ensuring the City's desired result.

By preparing all city buildings for future installation of solar panels, the City of Tucson will continue the pro-solar policies in place since 1999 which lead to Tucson becoming a US DOE Solar America City. This approach is also consistent with suggested actions of the City's Climate Change Committee, which has recommended continued adoption of solar technology on City facilities. By looking ahead to a time when all possible City rooftops are used for solar energy generation, the City continues this tradition. These Guidelines explain the necessary detail to implement such a policy.

February, 2012

FINAL REPORT

Solar Photovoltaic (PV) Readiness Guideline for Municipal Buildings

Facilities Management Division
General Services Department

City of Tucson, AZ

Prepared for

City of Tucson

17 June 2010/ 11 February 2011

Prepared by

CH2MHILL
9191 S. Jamaica St.
Englewood, CO 80112
(303) 771-0900
Prepared by: Eric Sandoval
With additional edits by City of Tucson staff

Contents

Section **Page**

Contents ii

1.0 General Requirements 1

2.0 Applicable Codes and Standards 2

3.0 Solar Photovoltaic System 3

4.0 Architectural System 4

5.0 Structural System 7

6.0 Mechanical System 9

7.0 Electrical System 11

8.0 ADOSH (Arizona Department of Occupational Safety and Health) 13

9.0 Fire Department Access 14

10.0 Quality Assurance/Review 16

11.0 References 17

12.0 Appendices 18

Appendix A – Recommendations for Building Solar Ready Buildings

Photovoltaic Systems 19

Appendix B – Structural Calculations 25

SOLAR PV-READINESS GUIDELINE
For
Municipal Buildings

1.0 General Requirements

A. This **SOLAR PV_READINESS GUIDELINE** (Guideline) is intended for the use of the **City of Tucson** (City). The Guideline is a list of criteria for the designer specifications. The Guideline establishes the design considerations of the City for the installation of solar photovoltaic components (Solar PV) on municipal buildings and building-like structures owned by the City. The design consideration of the building shall accommodate Solar PV installed either during the building construction or in the future.

B. The Architect and/or Engineer shall prepare a Design Narrative hereafter called the Basis of Design (BOD) for the Solar PV system anticipated for the proposed building. The Architect and/or Engineer shall coordinate with the City for the BOD requirements. The BOD shall be included in the schematic design submission. The requirements noted in this Guideline will be addressed for a specific project based on the BOD that is developed for the project.

   Within the BOD, the Architect and/or Engineer shall provide a proposed means of achieving 5% of the total building energy consumption by use of solar energy. This 5% shall include solar energy utilization by a combination of Solar PV, daylighting and/or a solar hot water system. If possible, the BOD should identify a south facing roof with sufficient solar access for solar applications, minimize shadows from chimneys and other obstructions, identify a conduit path from Solar PV panel location to building electrical panel, and identify an inverter location. The BOD shall include Solar PV type, location, and extent by addressing the design considerations listed in this Guideline.

   The City's goal is to have new building construction achieve the Mayor and Council required 5% offset in conventional energy usage by using solar energy. A further goal is to include a large amount of solar energy utilization on the building when it is constructed and provide accommodations for usage of additional solar energy in the future.

2.0 Applicable Codes and Standards

A. International Building Code (IBC), latest edition adopted by the City.

B. American Society of Civil Engineers Standard 7 (ASCE 7) – latest edition reference by the IBC.

C. International Fire Code (IFC), latest edition adopted by the City.

D. International Mechanical Code (IMC), latest edition adopted by the City.

E. Uniform Plumbing Code (UPC), latest edition adopted by the City.

F. National Electrical Code (NEC), latest edition adopted by the City.

G. International Energy Conservation Code (IECC), latest edition adopted by the City.

H. Arizona Department of Occupational Health and Safety (ADOSH), latest edition adopted by the State of Arizona.

3.0 Solar Photovoltaic System

A. System Description

1. This provision is intended to provide direction on the decisions of the City in regards to the types of Solar PV covered. As technology develops in this area, it will be necessary to update this Guideline in relation to these new technologies. The criteria below give reference to specific Solar PV system types reviewed when compiling this Guideline. The revision and date of this Guideline will track the revisions as new technologies become available, as this Guideline incorporates and interfaces with the current codes and standards. It is the intent of this section to establish alignment of the City installations with the current codes and standards adopted by the City specific to Solar PV installations to ensure that the installation is in compliance with the building systems. It is also the intent of this section that building systems accommodate future Solar PV systems During schematic design, potential solar device location areas should be identified and protected unless cost prohibitive or in conflict with other City policies.

2. Solar Photovoltaic System shall be defined as described in the NEC. The total components and subsystems that, in combination, convert solar energy into electric energy suitable for connection to utilization load.

B. Design Criteria

1. Skylight Mullion Systems – These systems utilize framed PV modules or frameless PV module laminates with building integration into skylights as a translucent and/or opaque shading device.

2. Curtain Wall Systems – These systems utilize framed PV modules or frameless PV module laminates with building integration into curtain walls as a translucent and/or opaque shading device.

3. Non-penetrating Roof Mounting Systems – These systems use weight (ballast), laminate adhesives, are self-ballasting or are combinations thereof to withstand wind and seismic loading. This system is typically installed on low slope flat roofs with less than ½:12 pitch.

4. Penetrating Roof Mounting Systems – These systems anchor the PV racks to building structure to withstand wind and seismic loading.

5. Building integrated PV-photovoltaic cells incorporated into shingles, awnings, windows or other parts of the building envelope.

4.0 Architectural System

A. System Description

1. This provision is intended to provide direction on the decisions of the City in regards to architectural systems. The criteria below give reference to specific code provisions described in the IBC. It is the intent of this section to establish alignment of the City installations with the IBC specific to Solar PV installations to ensure that the installation is in compliance with the building architectural systems and to ensure that the building architectural system is designed to accommodate a Solar PV system

B. Design Criteria

1. The building exterior envelope, includes but is not limited to, weather protection, fire classification and appearance in regards to roof assembly and exterior wall envelope. The building exterior envelop design regulated by the IBC shall accommodate the ability to install Solar PV systems while meeting the provisions of the IBC. Other provisions of the IBC may apply as appropriate to the Solar PV design of the building. When installing the Solar PV systems described in section 3.0 above, care should be given to the requirements of the IBC.

    a. Roofing

        i. Moisture Protection - Solar PV systems shall be designed, installed and maintained in a manner consistent with IBC section 1503. The roof assembly integrity shall be preserved to prevent moisture, rodents and insects from entering the wall and roof at anchorage points of Solar PV systems. Employment of flashing, coping, and roof drainage shall be used as described in section 1503 to meet the requirements of preventing moisture from penetrating the weather protection attributes of the roof assembly.

        ii. Fire Classification – Solar PV systems shall be designed, installed and maintained in a manner consistent with IBC section 1505. The roof assembly integrity shall be preserved related to fire classification. The installation of the Solar PV systems shall not remove the elements of the roof assembly that provide the fire classification.

iii. Appearance – Solar PV systems shall be designed, installed and maintained in a manner consistent with IBC sections 1507 and 1509. The installation methods of roofing materials described in 1507 shall be preserved with the installation. The requirements described in 1509 related to rooftop structures shall apply to Solar PV systems.

b. Walls

i. Moisture Protection - Solar PV systems shall be designed, installed and maintained in a manner consistent with IBC sections 1403, 1404 and 1405. The exterior wall envelope integrity shall be preserved to prevent moisture from entering the wall at anchorage points of Solar PV systems. Employment of flashing, coping, and wall drainage shall be used as described in sections 1403, 1404 and 1405 to meet the requirements of preventing moisture, rodents and insects from penetrating the weather protection attributes of the exterior wall envelope.

ii. Fire Classification – Solar PV systems shall be designed, installed and maintained in a manner consistent with IBC section 1406. The fire classification of the exterior wall envelope shall be preserved. The installation of the Solar PV systems shall not remove the elements of the exterior wall envelope that provide the fire classification.

C. Coordination

1. The building architectural system should be designed and installed in coordination with a future Solar PV system as determined by the BOD. The building architectural system should be designed to accommodate the Solar PV system in terms of its power capacity, location and ease of installation. Architectural features to be located on the roof shall be installed to provide sufficient area for the Solar PV system based on the BOD. The following items shall be included but not limited to:

a. The design for roof fire resistance and worker access at roof edge conditions shall consider how the Solar PV system will be mounted on the roof as determined by the BOD.

b. The design for the building scale form and identification shall consider how the Solar PV system will be mounted on the building form as determined by the BOD. The roof/wall surface where the Solar PV array is to be located should be oriented directly toward the solar resources (to the south).

c. The design for environmental lighting of interior spaces with natural lighting and location of skylights, clerestories and other natural light features shall consider how the Solar PV system will be mounted on the roof as determined by the BOD.

d. The design for roofing materials and weatherproofing shall consider how the Solar PV system will be mounted on the roof as determined by the BOD.

e. The siting of the building location on the property shall consider the orientation of the Solar PV system to the sun as determined by the BOD. Refer to the following document for specific considerations, Solar Powering Your Community: A Guide for Local Governments, January 2011, Section 3.1 (See References). Describe the solar easement needed on the adjacent properties to allow for continued access to the sun for the location of the Solar PV system.

f. The location of any existing (or future) foliage that may shade the photovoltaic array should also be considered. It is recommended that the building's landscape design avoid tall trees and other objects that may eventually cast a shadow on the photovoltaic array. Areas to the east, south, and west of the building should be carefully landscaped to avoid shading the array during the high solar irradiance part of the day (9am-3pm).

5.0 Structural System

A. System Description

1. This provision applies to the new construction of buildings and building-like structures to assure that adequate structural capacity is provided in the design to accommodate future Solar PV systems installation.

2. The provision addresses structural requirements for several types of Solar PV systems currently available on the market. The Guideline will need to be periodically updated to reflect new products that may become available in the future.

3. Since the provision covers a range of possible Solar PV systems, it has to be narrowed down to a specific system to be included in the Building Design Specifications or the BOD document. The extent of the proposed future system should be illustrated on the proposed roof plans and also be included in the documents.

B. Design Criteria

1. Table 1.4 specifies structural design criteria in terms of additional gravity, seismic, and wind loads associated with the Solar PV infrastructure to be used in the building structural design. It was prepared in accordance with 2006 International Building Code (IBC) with the City of Tucson Amendments, and ASCE 7-05, Minimum Design Loads for Buildings and Other Structures. All roofs must provide a minimum of five additional lbs/sf in the design to allow for future Solar PV installation regardless of other systems described in the BOD. Table descriptions include the following:

    a. Table 1.4 applies only to rooftop Solar PV systems installation, with the roof pitch not exceeding ½ inch in 12 inches.

    b. Table 1.4 specifies additional design loads due to Solar PV system infrastructure to be considered in structural design of the roof deck, roof purlins and girders, columns, foundations, and lateral load resisting system. Dead load and seismic mass are specified in pounds per square foot (psf) of the projected roof area occupied by the proposed system. Horizontal wind loads are specified in terms of additional effective projected area per lineal foot of the Solar PV racks. Uplift wind loads are specified in terms of percentage of the horizontal wind load and are to be used for design of roof deck and purlins.

    c. The loads shown are service level loads. Appropriate code prescribed load factors shall be used for the Allowable Stress Design (ASD) and Load and Resistance Factor Design (LRFD) load combinations.

TABLE 1.4 – Loading Schedule				
PV System Type	**Additional Design Loads**			
	Dead load, psf (2)	Seismic Mass, psf (2)	**Wind Load**	
			Horizontal load, effective projected area, sf/ft	Uplift load for roof deck and purlin design, percent of horizontal wind load
Non-penetrating, ballasted	20 (1)	15	12 (3)	0
Non-penetrating, low profile, self-ballasted	5 (1)	5	0	0
Laminate roofing membrane	2	2	0	0
Laminate membrane on metal backing	3	3	0	0
Penetrating system with the racks supported directly on the roof	6 (1)	6	12 (3)	25%
Penetrating system with the racks supported on long span steel framing elevated above the roof	16	16	16 (4)	0

Notes:

1. Dead load is non-concurrent with the roof live load.
2. The dead load and seismic mass are to be applied on the horizontal projection of the proposed solar PV system.
3. Horizontal wind load is applied at 3 feet above the roof surface.
4. Horizontal wind load is applied at 7 feet above the roof surface.

6.0 Mechanical System

A. System Description

1. This provision is intended to provide direction on the decisions of the City in regards to mechanical systems. The criteria below give reference to specific code provisions described in the IMC. The adjacency of mechanical roof penetrations and clearances to the Solar PV systems can be critical to the provisions of IMC. Rooftop equipment in various building systems should be located in a manner that meets the requirements of the BOD. It is the intent of this section to establish alignment of the City installations with the IMC specific to Solar PV installations to ensure that the installation is in compliance with the building mechanical systems and to ensure that the building mechanical system is designed to accommodate a Solar PV system to the greatest extent possible.

B. Design Criteria

1. The building mechanical system, includes but is not limited to, exhaust and recirculation of air for building occupancy. The mechanical system regulated by IMC shall accommodate the ability to install Solar PV systems while meeting the provisions of the IMC. Other provisions of the IMC may apply as appropriate to the Solar PV design of the building. When installing the Solar PV systems described in section 3.0 above, care should be given to the requirements of the IMC.

    a. Vent and Exhaust - Solar PV systems shall be designed, installed and maintained in a manner consistent with IMC sections 401.6, 501.2, 801.2, 908.3 and 1008.2. The vent and exhaust system discharge should not be placed in a location that would cause a nuisance to the Solar PV system (e. g. fuel burning appliance vent; vapor plumes; blow off valves; grease, hazardous dust, and other product conveying exhausts.)

    b. Solar Systems – Other solar systems, equipment and appliances intended to utilize solar energy for space heating or cooling, domestic hot water heating, swimming pool heating or process heating are governed by IMC chapter 14 beginning with section 1401.1.

C. Coordination

1. The building mechanical system should be designed and installed in coordination with a potential Solar PV system as determined by the BOD. The building mechanical system should be designed to accommodate the Solar PV system in terms of its power capacity, location and ease of installation. The following items shall be included but not limited to:

a. Mechanical equipment to be located on the roof should be installed in such a way to leave sufficient area for maintenance, access and a Solar PV array based on specifications determined in the BOD. Mechanical equipment includes but is not limited to: vents and exhaust systems, HVAC equipment, and any related conduit and piping for mechanical equipment (e.g. gas lines).

7.0 Electrical System

A. System Description

1. This provision is intended to provide direction on the decisions of the City in regards to electrical systems. The criteria below give reference to specific code provisions described in the NEC. The use of electrical systems for the Solar PV systems can be critical to the long term viability of the electrical systems as well as life safety provisions of NEC. It is the intent of this section to establish alignment of the City installations with the NEC specific to Solar PV installations to ensure that the installation is in compliance with the building electrical systems and to ensure that the building electrical system is designed to accommodate a Solar PV system to the greatest extent possible.

B. Design Criteria

1. The building electrical system includes, but is not limited to, the main electric service as supplied by the utility, switchgear, transformers, branch circuits serving building loads, grounding, emergency or supplementary power systems, and the Solar PV system. The building electrical systems shall meet all provisions of the NEC. The building electrical system shall accommodate future Solar PV systems as described in the BOD, while meeting the provisions of the NEC for the building. When installing the Solar PV systems described in section 3.0 above, care should be given to the requirements of the NEC.

    a. Solar Photovoltaic Systems - Solar PV systems shall be designed, installed and maintained in a manner consistent with NEC article 690.

C. Coordination

1. The building electrical system should be designed and installed in coordination with a future Solar PV system as determined by the BOD. The building electrical system should be designed to accommodate the Solar PV system to the greatest extent possible in terms of its power capacity, location and ease of installation. The following items shall be included but not limited to:

a. Capacity and ability of the electric service to accommodate the power generated by a Solar PV system as determined by the BOD so that it can be interconnected with the building system. (A location within the main disconnect panel for a dedicated Solar PV circuit breaker should be labeled as “Future Circuit Breaker From PV System” and left vacant. This breaker position must be located at the opposite end of the panel from the main utility breaker.) This circuit breaker location should allow for a 240-volt breaker.

b. Sufficient space allocated for Solar PV equipment such as the inverter, disconnects, metering, etc. as determined by the BOD (interior or exterior locations may be considered).

c. To facilitate wiring, consider adding conduit and/or stub-ups to the roof and terminating at the location of the Solar PV array. The size and number of conduits will be determined by the BOD.

d. Electrical equipment to be located on the roof should be installed in such a way to leave sufficient unshaded area for a Solar PV array based on specifications determined in the BOD. Electrical equipment includes but is not limited to: electrical conduit, lightning protection cables, bird deterrent devices, or any other items requiring wiring.

e. To minimize electrical losses associated with the transmission of DC energy, the distance between the Solar PV array and the inverter should be minimized to the greatest extent possible.

f. Any pre-installed components should be properly labeled to ensure that a Solar PV system will take advantage of the accommodations that were made (such as circuit breaker location, conduit or stub-ups installed with pre-determined wire sizes, conduit fill capacities, Solar PV system output limitations at main service panel if known, etc.)

8.0 ADOSH (Arizona Department of Occupational Safety and Health)

A. System Description

1. It is the intent of this section to establish alignment of the City installations with the ADOSH specific to Solar PV installations to ensure that the installation is in compliance with ADOSH and to ensure that the worker access system is designed to accommodate a Solar PV system to the greatest extent possible.

B. Design Criteria

1. When designing, installing and maintaining the Solar PV systems described in section 3.0 above, care should be given to the requirements of ADOSH, including:.

    a. 29 CFR part 1910 subpart D contains requirements specific to walking-working surfaces safety.

    b. 29 CFR part 1910 Subpart E contains requirements for means of egress safety.

    c. 29 CFR part 1910 Subpart S contains requirements for electrical safety.

    d. 29 CFR part 1926 Subpart K contains requirements for electrical safety.

    e. 29 CFR part 1926 Subpart M contains requirements for fall protection safety.

    f. 29 CFR part 1926 Subpart X contains requirements for ladder safety.

C. Coordination

1. ADOSH compliance should include but not be limited to:

    a. The design of the roof, exterior fenestration for window washing, should consider the location and extent of the Solar PV system as determined by the BOD.

    b. The design of the access to the roof to accommodate the workers for maintenance of roof top equipment should consider the location and extent of the Solar PV system as determined by the BOD.

9.0 Fire Department Access

A. Description

1. This provision is intended to provide direction on the decisions of the City in regards to fire department access. The criterion below gives reference to specific code provision described in the IFC. The access to roofs during a fire event can be critical to the long term viability of the building as well as the safety of the occupants within. It is intent of this section to establish alignment of the City installations with the IFC specific to Solar PV installations to ensure that the installation is in compliance with the fire department access systems and to ensure that the fire department access systems are designed to accommodate a Solar PV system to the greatest extent possible.

B. Criteria

1. The building fire system requirements address but are not limited to access to roofs, electrical systems and building occupancy. The fire department access design regulated by IFC shall accommodate the ability to install Solar PV systems while meeting the provisions of the IFC. Other provisions of the IFC may apply as appropriate to the Solar PV design of the building. When installing the Solar PV systems described in section 3.0 above, care should be given to the requirements of the IFC.

    a. Access to Roofs - Solar PV systems shall be designed, installed and maintained in a manner consistent with IFC Section 504.

    b. Electrical - Solar PV systems shall be designed, installed and maintained in a manner consistent with IFC Section 605.

C. Coordination

1. The fire department access system should be designed and installed in coordination with a future Solar PV system as determined by the BOD. The fire department access system should be designed to accommodate the Solar PV system to the greatest extent possible in terms of its power capacity, location and ease of installation. The following items shall be included but not limited to:

    a. The BOD should provide designs that comply with access requirements and edge restrictions contained in IFC 2012.

    b. The site design for fire truck access and accommodating hose connections from hydrant to fire truck to fire nozzles should consider location and extent of the ground mounted Solar PV system as determined by the BOD.

c. The site design for outdoor safe dispersal areas to meet IBC section 1024.6 and accommodating exit routes from exterior doors to the public ways should consider the location and extent of any ground mounted Solar PV system as determined by the BOD.

d. The design of the electrical panel system and fire department access to de-energize during a fire event per NEC Article 690.14 should consider the size and electrical demands of the Solar PV system as determined by the BOD.

10.0 Quality Assurance/Review

A. Description

1. The completion of the design of the buildings incorporating the impact of Solar PV systems upon the building is achieved through a series of incremental design and construction milestones. The BOD shall be completed at the Schematic Design phase of the building design so that Solar PV systems type, location, and cost can be established, decreasing the need for rework in the design documents. The BOD shall describe the Solar systems (in the present design and future) for the building in a graphic representation of site plan, floor plans and sections. A written narrative shall accompany and support the graphic form.

11.0 References

A. City of Tucson, Solar Integration Plan, March 2009 – Plan laying groundwork for accelerating development of solar energy facilities in and around Tucson. http://www.tucsonaz.gov/energy/Solar%20Plan%20Final.pdf

B. Solar America Cities, Solar Powering Your Community: A Guide for Local Governments, January 2011 – A guidebook with examples to stimulate ideas for a comprehensive solar plan for communities. http://solaramericacommunities.energy.gov/resources/guide_for_local_governments/

C. John Wiles, Southwest Technology Development Institute (SWTDI), Recommendations for Building Solar Ready Buildings Photovoltaic Systems, 23 June 2009. Attached as Appendix A below

D. L.Lisell, T Tetreault and A Watson, Solar Ready Buildings Planning Guide, NREL Technical Report NREL/TP-7A2-46078, December 2009

12.0 Appendices

Appendix A - Recommendations for Building Solar Ready Buildings Photovoltaic Systems, John Wiles, Southwest Technology Development Institute (SWTDI). June 23, 2009

Appendix B - Structural Calculations

Appendix A – Recommendations for Building Solar Ready Buildings Photovoltaic Systems

Recommendations for Building Solar Ready Buildings Photovoltaic Systems

Executive Summary

Builders considering adding photovoltaic (PV) systems to new buildings after initial construction is completed can save time and money by following new building Solar Ready design guidelines. Solar Ready buildings are designed and built with integrated electrical and mechanical features that streamline the integration of PV systems.

Solar Ready design guidelines are straightforward and impact building design in the following general areas:

- Roof pitch and orientation
- Layout of roof vents, chimneys, etc., to prevent shading
- Roof load bearing specification
- Installation of electrical conduit from main electrical panel location to roof
- Specification of main service panel and circuit breakers
- Space near the main electrical panel for PV inverters and other equipment

Early consideration of these few requirements will ensure the seamless integration of future photovoltaic systems.

1.0 Complete List of Solar Ready design guidelines

Below is the complete list of areas and concerns that must be addressed to configure a Solar Ready building:

- Site and solar resource evaluation
- Roof/array pitch and roof/array orientation
- Roof structure designed to support additional weight of PV array
- Location of roof vents, chimneys, etc., in relationship to PV array
- Location of PV array in relationship to inverter and point of interconnection with the existing utility service
- Specifications and routing of electrical conduit from roof to PV dc disconnect
- Prepare the main electrical panel for PV
- Provide location and adequate spacing for photovoltaic equipment near main electrical panel
- Design for proper panel and main disconnect ratings on the main electrical panel
- Prepare for photovoltaic back-fed circuit breaker in main electrical panel
- Photovoltaic Solar Ready component labeling

The following sections describe each of these requirements in detail. This information is intended as a guide in cases where the PV system design has not been determined. In cases where the design of the future PV system is already known, some of these recommendations can be changed to more specifically and effectively accommodate the system installation. For example, when the type and model of PV modules are known, specific direct current (dc) wiring and disconnects can be sized and installed in advance.

2.0 Descriptions of recommended design guidelines

2.1 Site and solar resource evaluation:

When designing a PV Solar Ready building, a basic design requirement will be to perform a site evaluation of the building's location and orientation to the existing solar resource. This evaluation should take into account the relationship of the building to the path of the sun throughout the year. The location of any existing (or future) foliage that may shade the photovoltaic array should also be considered. It is recommended that the building's landscape design avoid tall trees and other objects that may eventually cast a shadow on the photovoltaic array. Areas to the east, south, and west of the building should be carefully landscaped to avoid shading the array during the corresponding portions of the day.

2.2 Roof/array pitch and roof/array orientation:

Another basic design requirement will be to determine the pitch and orientation of both the roof and the photovoltaic array. The roof surface where the PV array is to be located will, in an ideal case, be oriented directly toward the solar resource. This is generally to the south in the northern hemisphere. Where possible, the pitch of the roof plus the tilt of the array should be slightly less than or equal to the local latitude to provide optimal year round performance.

2.3 Roof structure designed to support additional weight of PV array:

When building a Photovoltaic Solar Ready building, the structural integrity of the roof should be examined to determine that it will carry the added weight of the photovoltaic system and the mounting components. The additional weight of the system will vary greatly depending upon the photovoltaic modules and mounting system used. In general, the roof below the photovoltaic array should be designed to support at least an additional 5 lbs/sq ft of dead weight.

2.4 Location of roof, vents, chimneys, etc., in relationship to PV array:

When designing the layout and location of roof protrusions, special consideration should be given to the location of roof vents, chimneys, gables, or other obstructions that could cast shadows upon the photovoltaic array. The roof design should allow ample clearance for the anticipated photovoltaic array as well as eliminate any shading obstructions along the projected solar path. In general, in the northern hemisphere, any roof protrusions should be located to the north of the planned array location and, depending upon the orientation of the roof surface, other protrusions should be limited to those locations that will limit the amount of shading during the year.

2.5 Location of PV array in relationship to inverter and point of interconnection:

To minimize losses associated with the transmission of dc energy, the distance between PV array output and the inverter should be kept to a minimum. For instance, if the inverter and main electrical panel are to be located in a garage or utility room, a logical location for the PV array would be on the appropriate roof surface directly above the garage or utility room location. This also serves to minimize the amount of electrical supplies, conduit, wire, etc., necessary to complete the connection between the PV array and the inverter.

2.6 Specifications and routing of de conduit from roof to de disconnect location:

A metal conduit is necessary to bring the dc wiring from the PV array output to the location of the dc combiner panel or dc disconnect (depending on the design of the PV system). The size of this conduit should be no smaller than 1" to accommodate the dc wiring.

If the building has an accessible attic space, it is recommended that the conduit be terminated within the attic area to allow for future installation flexibility. The installer will then route the conduit through the attic to the appropriate location before penetrating the roof surface. If the attic is inaccessible, the conduit penetration should be located in a place on the roof as near the anticipated PV array output as possible to minimize the amount of exposed wiring between the PV modules and the input to the conduit.

If the building has a flat roof the dc wiring conduit can be terminated on the inside of a parapet wall or, if necessary, up through the ceiling and roof surface at the appropriate location.

The opposite end of this conduit should be in a location where it can be easily connected to any future component: dc disconnect, dc combiner. Both ends of the conduit should be capped off to keep out water and pests.

2.7 Location and adequate spacing for photovoltaic equipment near main electrical panel:

Adequate space should be available in a readily accessible location for a dc disconnect, inverter, ac disconnect and, if applicable, PV system renewable energy credit (REC) meter and utility required ac disconnect will be mounted. The dimensions required for the location for the PV equipment will largely depend upon the PV system design and equipment choices. In general, a commercial PV system consisting of the equipment mentioned above will require four to five horizontal feet of wall space with adequate clearance above and below the mounting locations. The requirement and location for an additional ac disconnect and PV REC meter is determined by the requirements of the local jurisdiction as well as the local electric company. If this equipment must be located within site of the main electrical disconnect on the exterior of the building, it is recommended that the building design allow two to three feet of space.

2.8 Design for proper bus bar and main disconnect ratings on the main service panel:

The National Electrical Code (NEC) imposes requirements on the size of a PV system that can be added to a specified size of existing electrical service.

The 2005 NEC requires that commercial installations meet the requirements of section 690.64 which covers the point of connection and allows for two types of photo voltaic system interconnection. Section 690.64 (A) allows the output of a photovoltaic power source to be connected to the supply side of the service disconnect. This is often the best option for photovoltaic system retrofits on commercial buildings.

The second option described in section 690.64 (B) is the load side connection. This option requires that the sum of the photovoltaic breaker and the main breaker is less than or equal to the rating of the distribution panel. In the case where the building is constructed with a photovoltaic system in mind, it will be necessary to size the distribution panel, main breaker and photovoltaic breaker appropriately. In the case of series connected panels, the main breaker for each panel is counted in the above calculation.

For instance, an 800-amp main circuit breaker rating along with a 1000-amp panel rating will accommodate up to 200 amps of ac current, which would allow PV systems up to 60 kW in size on a 3 phase 208 Volt service.

In the case of series connected panels, if a 20-amp PV breaker feeds into a 100-amp panel with an 80-amp main then the 80-amp breaker is used to calculate the size of the main breaker in the main panel.

The 2008 NEC Section 690.63 allows commercial buildings to install breakers that when added to the main breaker are less than or equal to 120% of the rating of the distribution panel. The photo voltaic breaker must be installed in the location of the panel farthest from the utility breaker. Also Section 690.63 in the 2008 NEC states that only the PV breaker is counted in the case of series connected panels.

For instance, a 1000-amp main circuit breaker rating along with a 1000-amp panel rating will accommodate up to 200 amps of ac current, which would allow PV systems up to 60 kW in size on a 3 phase 208 Volt service. If the future photovoltaic system will produce more than

20% of the main circuit breaker's rating, then the size of the main electrical panel should be increased, in accordance with NEC 690.64(B).

2.9 Considerations for photovoltaic circuit breaker in main disconnect panel:

If the size of the PV system is unknown, a location (within the main disconnect panel) for the circuit breaker should be labeled as "Future Circuit Breaker From PV System" and left vacant for the installer to specify and connect. This breaker position must be located at the opposite end of the panel from the main utility breaker. This circuit breaker location should allow for a 240-volt breaker which, in turn, will allow the option of a 120-volt system to be installed if this is desired.

2.10 Photovoltaic Solar Ready component labeling:

Proper labeling of the pre-installed components will ensure that a future PV system installation will properly take advantage of the various features of the Solar Ready building. A label detailing specific PV system output limitations is recommended for the main service panel. This label should detail the current limitations and voltage level required to meet the various electrical standards, *NEC*, and local requirements. The PV circuit breaker location should also be labeled as such. It is also recommended that the dc conduit be labeled with appropriate wire size ranges and conduit fill capacities briefly detailed as well.

Prepared by staff of the Southwest Technology Development Institute, New Mexico State University, Las Cruces, NM, June 23, 2009

Appendix B – Structural Calculations

CH2MHILL
Lockwood Greene

Job Name Tucson Solar Bldg. _____
Subject Task 2 - Building Standard

Job No. 383998.K4
Sheet No. BS-1
Date 8/6/09
Computed By VK
Checked By _____

Loads Specification for new Construction.

1. Non-penetrating ballasted system
Ave. load - 15 psf - based on EC Pueblo installation
to account for local concentrations, use 20 psf DL.
Use 15 psf Seismic mass. non-concurrent with roof live load.

Wind Load: Ref. ASCE7-05, 6.5.15 and 6.5.15.1

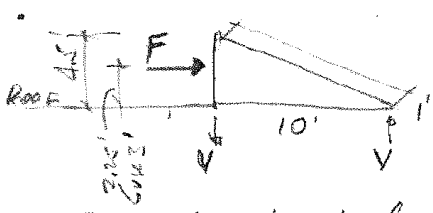

$F = q_z G C_f A_f \times 1.9$ (6-28)

$C_f = 1.3$ for $h/D = 1$ Fig. 6.21

Effective Area $= 1.3 \times 1.9\, A_f = 2.47\, A_f$

Per 1 foot of length of the rack:

Effective Area $= 2.47 \times 4.5 \times 1.0 = 11.1$ SF/1 → use 12 SF/1

Uplift $= F \times 2.25/10 = .225\, F$ - use $.25\, F$ - for unballasted system only

2. Non-penetrating, low profile, self-ballasted
3.3 psf - Solyndra
4 psf - Powerguard Roof Tile
Use 5 psf for spec. (Dead load and Seismic mass)

3. Laminate roof membrane - 2 ply roofing system
SIT 1.8 psf use 2 psf

4. Laminate membrane on metal decking:
SIT 1.8 psf + 1 psf steel runners - use 3 psf

IPP1001 6/05

CH2MHILL
Lockwood Greene

Job Name Tucson Solar Bldg. _____
Subject Task 2 - Bldg. Std

Job No. 383903.14
Sheet No. BS-2
Date 8/6/09
Computed By VR
Checked By _____

5. Penetrating System with the racks installed directly on the roof

Schletter racks + panels ≈ 3 psf — use 6 psf

Wind load - see Non-penetrating Ballasted system

6. Penetrating System, Racks installed on long-span steel framing elevated above the roof

DL + Seism. Meas. 6 psf racks + panels + 10 psf steel = 16 psf

Wind:

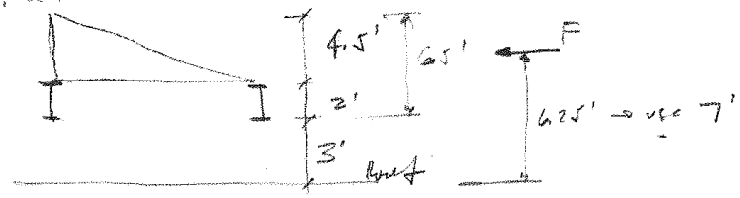

Effective Area = 2.47 × 6.5 × 1.0 ≈ 16 SF/1

IPP1001 6/05

City of Tucson

General Services Department
Architecture and Engineering Division

<u>"AUTOCAD STANDARDS AND GUIDELINES"</u>

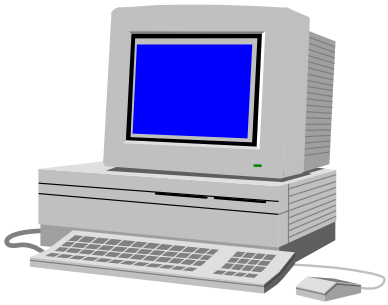

Revised: **September 2, 2008**

INTRODUCTION

This notebook is a specification and reference to the City of Tucson, General Services Department, Architecture & Engineering Division's (AED) use of AutoCAD. The specifications describe the standards and procedures for input of drawings into a format acceptable to the AED. Compliance is required where called for in contractual agreements for providing electronic "as-built" ACAD and PDF files to the AED. Only AutoCAD 2006 or later will be accepted. PDF's may be any version of Adobe Acrobat (2000 or later is recommended).

This notebook is a living document. As the division's use of CAD matures and technology advances this notebook changes reflecting the progress. Updated sections are issued frequently. Please direct any comments you may have regarding these AutoCAD Standards to *Octavio A. SantaMaria, Jr.* ***(520) 791-5111 x 331*** *or e-mail* octavio.santamaria@tucsonaz.gov .

INDEX

Backup Procedures ..... page 4
CADD Project Archive Guidelines ..... page 5-6
CADD Files Project Archive Form ..... pages 7-9

General CAD Drafting Practices.....page 10
Drawing Numbering System.....page 11
File Naming Convention.....page 12

City of Tucson A/E Group Color to Width & Pattern Matrix.....page 13
Scale Factors .....page 14-15
Text-Fonts.....page 16

CAD Layer Guidelines-Layer Name Format.....pages 17-20
Architectural Abbreviations .....pages 21-23
Wildcard Characters.....page 24

AutoCAD General Error Recovery & Possible Causes .....page 25
Softdesk Macros Help File .....page 26-27
Linetypes to Confirm Definitions..... page 28-30

Text Height Conversion Chart ..... page 31
Metrication Chart..... page 32
Insertion Conversion Scale Table/Drawing Height Conversion Chart..... pages 33-34

Attachment "A" - Confirmation of Receipt form…….. page 35

Attachment "B" – City of Tucson / Architecture and Engineering Standard Titleblock

Attachment "C" - City of Tucson / Architecture and Engineering Standard Graphic Illustration Coversheet Example with required information

Attachment "D" – City of Tucson / Architecture and Engineering Standard Coversheet Example with required information

BACKUP PROCEDURES

This method assures daily, weekly and monthly backups. If a computer were to crash on Thursday, the data could be easily recovered by restoring one of the Total backups from Monday and the modified backups from Tuesday and Wednesday.

BACKUP SCHEDULE

Week	Monday	Tuesday	Wednesday	Thursday	Friday
Week 1	TAPE 1 Modified Backup	TAPE 1 Modified Backup	TAPE 1 Modified Backup	TAPE 1 Modified Backup	**TAPE 1** Total Backup
Week 2	TAPE 2 Modified Backup	TAPE 2 Modified Backup	TAPE 2 Modified Backup	TAPE 2 Modified Backup	**TAPE 2** Total Backup
Week 3	TAPE 3 Modified Backup	TAPE 3 Modified Backup	TAPE 3 Modified Backup	TAPE 3 Modified Backup	**TAPE 3** Total Backup
Week 4	TAPE 4 Modified Backup	TAPE 4 Modified Backup	TAPE 4 Modified Backup	TAPE 4 Modified Backup	**TAPE 4** Total Backup

Tapes are clearly labeled BACKUP with the type of backup and day of the week indicated.
For example: Modified-1_Monday. Friday tapes must be stored off-site until they are reused 4 weeks later.

Note:
Tapes are optional, C.D.'s are approved means of backup as well. This backup method is simply identified to help and/or assist your office with backup procedures if you don't have one in place already. It is always a good idea to keep backup records of drawings "on-site" and an additional set "off-site".

(When submitting "As-built Electronic ACAD files" to the City of Tucson – Architecture and Engineering Division, you must submit in C.D. format, USB Flashdrive or SD Memory Card that has enough capacity and is capable of holding all of the project files. See page five, under "ELECTRONIC DRAWINGS SUBMITTAL".)

CADD PROJECT ARCHIVE GUIDELINES

ARCHIVE ISSUES:

* Archiving should be done at project completion or when there is the potential for loss of CADD data (beyond normal backup procedures.)
* CADD project archives are done in addition to normal backups.
* Electronic files are not legal documents, sealed drawings are.

PROGRESS BACKUPS (__% Complete Backups)

1. Determined by Project Manager when:
   A. Two or more weeks pass with no work being done on the project CADD files.
   B. There may be a need to return to a previous stage of work.
2. Project notebook
   A. Include a completed copy of the PROJECT ARCHIVE FORM.
   B. Include a completed copy of the DRAWING INFORMATION sheets and DLIST.
   C. Printout of directories and files in each that are archived.
3. Archive
   A. Perform 2 backups of the project.
      a. One backup is stored in the safe.
      b. The second backup is stored off site.
   B. The archive tape is to backup all project drawings and associated files.

FINAL ARCHIVE

1. Get approval from Project Manager.
2. Circulate copies of laser plots for detail extraction. When candidates have been identified, WBLOCK off drawings, store in appropriate subdirectory under C:\STNDS and document.
3. Split out any drawing files that may have more than one drawing in them.
4. Purge all files - keep only pertinent information.
5. Project notebook, include the following:
   A. DRAWING INFORMATION sheet, completed in detail.
   B. Updated laser plots drawings (8 1/2” x 11” or 11” x 17”).
   C. Project information necessary to help explain how the job was put together for future use.
   D. PROJECT ARCHIVE FORM
   E. Printout of directories and files in each that are archived.
   F. Store one copy in safe.
   G. The second copy is stored off site.
6. Archive
   A. The archive tape is to backup all project drawings and all associated files.
   B. Perform 2 backups of the project
      a. One backup is stored in safe.
      b. The second backup is stored off site.

ELECTRONIC DRAWINGS SUBMITTAL

1. Drawing files must be in AutoCAD format Release 2006 or more recent.
2. All electronic files must be in “as-built” form and submitted in C.D. format, USB Flashdrive or SD Memory Card that has enough capacity and is capable of holding all of the project files. Also, the media shall be accompanied with “as-built” plotted Mylar’s in full size. Please be sure to create proper directories (See example 1, page 6) on the C.D.(s) so that files are properly archived in there profession’s named directory. A print out of the directories and files shall be submitted along with the C.D.(s), flashdrive or memory card.
3. If multiple numbers of C.D.s are submitted, please label “C.D. #1 of 2, C.D. #2 of 2, etc.”

and submit a print out for each.

<u>Example 1</u>

(*C.D. or Disk drive* →**D:**) **** (*FD&M Job #* → **"8123"**) **** *(Profession's Name* → **Arch**) **** (*ACAD files in each of there pertaining directories. Xref files & fonts must have there own directory)*

**Struc **
**Elec **
**Mech **
**Data **
**Land **
**Civil **
**Xref, etc. **

4. C.D.'s shall be labled on the outside as follows:

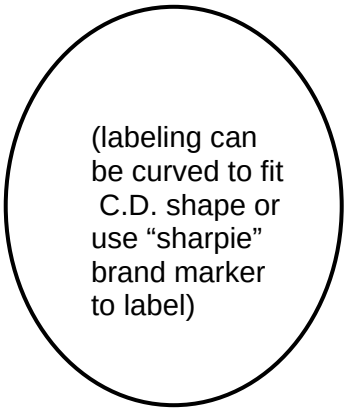

<u>C.D.</u>

4. As-built files must include clouded areas with alternative, addendum or change order number next to the cloud. Revision box in the title block must be described and dated.
5. Files reduced in size by means of compaction through a file reducer software will <u>not</u> be an acceptable means of submittal*****. Files shall be submitted in full size (be sure to use the "purge" command for all files, to keep only pertinent information) and as directed in item 2, under "Electrical Drawings Submittal".

CADD FILES PROJECT ARCHIVE FORM

PROJECT INFORMATION:

Project Name:

Project Job Number: _____ Project Manager:

Requested By: _____ Request Date:

Project Team Members (CAD related):

City of Tucson:

Consultant:

Consultant:

Consultant:

Other:

ARCHIVE INFORMATION:

Archiver:_____ Archive Date:

Project Size (in MB):

Other information to include
on Archive tape label:

Initial and date when completed:

TASK	INITIAL	TAPE LABEL#	DATE	RESPONSIBILITY
1 Tape set to safe:				
1 Tape set off site:				
1 Notebook to safe:				
1 Notebook off site:				

**** Return form to originator when archive is complete. ****

Project: Date:

Project No.:

Sheet No.	CAD File No.	Drawing Title	Assoc. Files No.	Plan No.	Person

Drawing Information

Drawing
Title:

Sheet No.: File No.: Plot Scale: Plan No.: Person:

Drawing
Notes
Paper
Space

GENERAL CAD DRAFTING PRACTICES

1. **SAVING:** Save frequently, AutoCAD's autosave feature must be set to save every 15 minutes or less. Use the SAVETIME command.
2. **DRAWING ORIGIN:** The lower left hand corner of all title blocks should orginate from the global 0,0 point.
3. **LIMITS:** Drawing limits match plotting sheet size.
4. **COLOR & LINETYPE:** Element color and linetype are set bylayer, not by entity. Do NOT change entity color or linetype with the CHANGE PROPERTY command, use layers to these parameters.
5. **SNAPS & OBJECTS:** Snaps and objects are to be used for all precision placement.
6. **LTSCALE:** LTSCALE should equal DIMSCALE.
7. **REGENAUTO:** REGENAUTO is turned off and the EXPERT variable is set to 0.
8. **HIGHLIGHT:** HIGHLIGHT is always set to 1 (on).
9. **EXITING A DRAWING:** Always save drawings with the full drawing visible (Zoom All).
10. **BLOCKS:**
    A. All blocks are always created on layer 0.
    B. Blocks that are used in drawings of various scales are to be created at full scale, 1"=1".
    C. Do not explode BLOCKS or hatch patterns.
11. **XREFS:**
    A. All xrefs shall be binded to the drawing file used in the final archival submittal(s).
12. **TEXT:**
    A. Only standard AutoCAD and Softdesk architectural fonts are to be used. “Chisel.shx” font style is to be used or approved equivalent.
    B. Text heights are not set with the STYLE command.
    C. CHISEL font is used for all notes and titles.
    D. All plotted notes are 1/8" high, upper case.
    E. All plotted titles are 1/4" high, upper case
    F. Arrow size shall be the same as the text height and solid terminator. Architects must use Tick Marks when dimensioning; these shall be 1/8” long and 1/64” thick when dimensioned in paper space, and they shall be slanted 45 degrees to the dimension line.
13. **PAPER SPACE VS. MODEL SPACE:**
    A. Title blocks, general notes, sheet notes, and entities that are not attached to entities that represent “ real objects”, must be placed in Paper Space. The rest will be placed in Model Space.
14. **TITLE BLOCK:**
    A. C.O.T. title block will be used as an insertable drawing with title block. It contains an editable text block with the insertion point at the lower right hand corner of the outline border; it may be edited with the DDATTE command. Title Blocks files must be inserted in Layer 0 in Paper Space in 0,0 coordinate; they are drawn at 1” = 1”.
    B. At title of drawing, the bubble size must be 11/16” in diameter, text inside the bubble and title must be 1/4” high, text of the drawing scale must be 1/8” high.
    C. At section and details cuts, the bubble size must be 9/16” in diameter, text inside bubble must be 1/8”.
    D. The current City of Tucson / Architecture and Engineering titleblock shall be required for all projects small or large. See Attachment “B”. Contact **Octavio A. SantaMaria, Jr.** at **(520) 791-5111 x331 or** octavio.santamaria@tucsonaz.gov to obtain ACAD files.
    E. The coversheet for every project will not need a titleblock. The coversheet shall require the information (at a minimum) provided on the coversheet example. See Attachment “D”.
    Note:
    The coversheet does not need to look exactly like the example, but all information shown on the example is required. Projects that are new stand alone facilities, major renovations or expansions will require an additional coversheet in front of the above mentioned sheet containing some type of graphical illustration and the title of the project. See Attachment “C”. If you have any questions, please contact **Octavio A. SantaMaria, Jr.** at **(520) 791-5111 x331 or** octavio.santamaria@tucsonaz.gov .

DRAWING NUMBERING SYSTEM

A. Facilities Design and Management has adopted the standard system offered by The Architect's Handbook of Professional Practice as outlined by the American Institute of Architects. The type of system used is for "Average to Large Projects". (See Attachment "A"). For your convenience we have reproduced the architectural section below.

ARCHITECTURAL DRAWINGS

A0.1,2,3... Index, Symbols, Abbreviations, Notes, Location Map
A1.1,2,3... Demolition, Site Plan, Temporary Work
A2.1,2,3... Plans, Room Material Schedule, Door Schedule, Key Drawings
A3.1,2,3... Sections, Exterior Elevations
A4.1,2,3... Detailed Floor Plans
A5.1,2,3... Interior Elevations
A6.1,2,3... Reflected Ceiling Plans
A7.1,2,3... Vertical Circulation, Stairs, Elevators, Escalators
A8.1,2,3... Exterior Details
A9.1,2,3... Interior Details

B. These nine sections will always remain the same no matter how large or small the project may be. Additional drawings may be added with groups without interrupting the alphanumerical order. For small projects, unused sections will not be noted and will be skipped; always maintaining the 0 to 9 numbering system.

EXAMPLE 1.- If a large project has 4 floors plans that need to be divided into West and East sections, a sample of the drawings to be used may be numbered as followed:

A4.1.1 for Detailed Floor Plan of the first floor West/East section
A4.3.2 for Detailed Floor Plan of the third floor East/West section

EXAMPLE 2.- If a large project has 9 floors of reflected ceiling floor plans and the architect wishes to divide each floor into restrooms, lobby, offices and conference rooms, and the conference rooms are to be divided into small and large, a sample of the drawings to be used may be numbered as followed:

A6.3.2.1 for Reflected Ceiling Plans of the third floor, conference room small/large
A6.4.2.2 for Reflected Ceiling Plans of the fourth floor, conference room large/small

EXAMPLE 3.- If a small project has only one sheet with a location map and notes, one floor plan, two exterior elevations and one stair detail, the full index of drawings may be as follows:

A0 Index, Location Map and Notes
A2 Floor Plan
A3.1 North Elevation
A3.2 South Elevation
A7 Stair Details

EXAMPLE 4.- If a project is only comprised of the demolition of a two story office building, the full index of drawings may be as follows:

A0 Index, Location Map and Temporary Work
A1.1 Site Plan and General Notes
A1.2.1 Demolition Phasing Plan-Stage 1
A1.2.2 Demolition Phasing Plan-Stage 2
A1.2.3 Demolition Phasing Plan-Stage 3

FILE NAMING CONVENTION

A. In order to associate electronic files with hard copy drawings, files names must correspond with the drawing numbers that are apart of the drawing set. Xref files names reflect the type of drawing and some information pertaining to the specific location or characteristic of the building area, or simply sequential numbering. Study sketch file names should reflect the number assigned in a sketch log for the particular job the sketch is drawn.

B. File names are limited to eight characters, therefore some special cases may occur and names might be slightly altered. In this case keep in mind that the general concept is to assist you in searching for files later on. The following are examples of the relation of sheet numbering system explained above and CADD file names:

SHEET NUMBER	CADD FILE NUMBER
A0.1.2	A00102
A1.1	A101
A1.2.3.4	A1020304
A9.1	A901
A9.10.11	A9010011

In naming files, the computer will not accept dots, dashes, colons, ampersands, or any other type of punctuation, therefore you replace "." for zeros.

C. The following is a partial list of accepted abbreviations or the "type" of drawings used when naming XREF'S files. (Any other abbreviation not included herein would have to be approved by FD & M.)

TYPE OF DRAWING	ABBREVIATION
Site Plan	SIT
Demolition	DEM
Floor Plan	PLN
Detailed Floor Plan	PLND
Reflected Ceiling Plan	RCP
Elevation (Exterior)	ELV
Elevation (Interior)	ELVI
Section	SEC
Stairs	STR
Elevators	EVT
Escalators	ESC
Details	DET

D. A sheet containing third floor plans may be named A2.3, as described by the AIA standards; its CADD number may be A203, replacing the "." for a zero, and its associated file (XREF) may be named APLN203. "A" refers to the discipline (Architecture); "PLN" refers to floor plan; "2" refers to the AIA numbering system for plans; "0" is the replacement of the ".", and the "3" is for third floor.

E. The actual drawing in model space and the title block are to be XREF's, and then brought forward to the actual sheet from which the plotting is to be made. Except for a few objects actually drawn on the sheet's paper space, no other object should be able to be altered while viewing the sheets on your screen.

THESE ARE SUGGESTED PEN COLORS AND THICKNESSES, ANY DEVIATION THEREOF WILL REQUIRE A PCP FILE TO BE INCLUDED WITH SUBMITTALS

PEN #	COLOR	City of Tucson A/E Division	MM	PIXEL	SCREEN
1	RED	2	0.35	6	
2	YELLOW	4	0.70	11	
3	GREEN	3	0.50	8	
4	CYAN	1	0.25	4	
5	BLUE	4	0.70	11	
6	MAGENTA	2	0.35	6	
7	WHITE	1	0.25	4	
8	DARK GRAY			8	9
9	DARK RED	7			
10	BROWN	2			
11	DARK GREEN	6		8	
12	LIGHT BLUE	4			
13	DARK BLUE	8			
14	PURPLE	6		8	7
15	GRAY	5		8	9

SCALE FACTORS

Scale factors are probably one of the most difficult aspects of CADD to visualize and remember. Hopefully, the following explanation will assist in clearing up this issue.

On a printed or hand drafted drawing, drawing scale represents a ratio. For example on a 1/4"=1'-0" drawing, a 1/4" represents 1' in real space. With a hand drafted drawing at this scale a wall 10' long is drawn 2-1/2" long. In CADD this same wall is drawn at its true or full scale length of 10'. When plotted AutoCAD reduces the drawing so that the wall is 2-1/2" long. The ratio of reduction is determined by the drawing scale. For 1/4"=1'-0" this ratio or scale factor is 48. This is determined by dividing the left side of the equation into the right side. How many 1/4" are there in 1'-0"? There are 48. This method of determining a drawing scale factor is applicable to all scales regardless of types of units used.

Text, diagrammatic symbols, north arrows, base titles, etc. need to be enlarged by the drawing scale factor, since objects created in a CADD drawing are drawn at full scale and only reduced when plotted.

Here is a way to visualize this concept. Since the building is created in AutoCAD at full scale, when you are viewing the total building on screen it is the same as if you were several feet above an actual building. If you were hovering above a building and looking down on it, to read text painted on the sidewalk you would have to paint it several inches tall.

To determine how tall to make 1/8" text in a drawing at 1/4"=1'-0" just multiply 0.125" times the drawing scale factor of 48. This yields a text height of 6" in the CADD drawing.

When creating base titles, diagrammatic symbols, north arrows, etc. draw them at full scale. For example a base title 42"x30" would be input at 42"x30". When inserting the block (all blocks created full scale) into a drawing it would be scaled up the drawing scale factor. Using this method enables you to use the blocks at any scale.

Following are scaling tables to assist when placing text and other scale sensitive elements.

Scaling Factors

These SCALING FACTORS and SCALE CONVERSION FORMULA are used to determine the INPUT SCALE of any FULL SCALE block or text string.

Drawing Scale	Scaling Factor
1” = 50’	600
1” = 40’	480
1” = 30’	360
1” = 20’	240
1” = 10’	120
3/32” = 1’-0”	128
1/8” = 1’-0”	96
3/16” = 1’-0”	64
1/4” = 1’-0”	48
3/8” = 1’-0”	32
1/2” = 1’-0”	24
3/4” = 1’-0”	16
1” = 1’-0”	12
1 1/2” = 1’-0”	8
3” = 1’-0”	4

Plotted Text Height	Height Factor [HF]
3/32”	10.67
1/8”	8.00
1/4”	4.00

SCALE CONVERSION FORMULA: SF/HF = INPUT SCALE

1. Styles - City of Tucson-Architecture and Engineering Division uses the standard AutoCAD fonts and the fonts which come with Auto-Architect. When using them please take note of the following:

A. There is a frequent misunderstanding with AutoCAD as to the difference between a text style and a text font. The style is the user given name of a text style. The text font is the font file name that is designated for the user named text style. All styles at City of Tucson-Architecture and Engineering Division are named after their corresponding font file.

Example:

COMMAND: STYLE Text style name (or ?) <CHISEL>:
Font file <CHISEL>:
Height <0'-0">:
Width factor <1.0>:
Obliquing angle <0.00>:
Backwards? <N>
Upside-down? <N>
Vertical? <N>
CHISEL is now the current text style.

B. Typical creation parameters for user created styles.

a. It is advisable that you do not fix the height of a text style with the style command. This allows for variations of heigth with the same style and font while reducing the number of styles used. If you do fix the height that text style is fixed and can not be adjusted for future use or modification.

Example:
Text style <CHISEL>
Font file <CHISEL>
Height: <0'-0">
Width factor: <1.0>
Obliquing angle: <0.00>
Backwards: <No>
Upside-down: <No>
Vertical: <No>

CAD Layer Guidelines - Layer Name Format

The City of Tucson utilizes the AIA standard layering guidelines as described below:

Long Format

Major Group- 1 Character. This categorization breaks the list into manageable sections, using the divisions of architectural, structural, mechanical, plumbing, fire protection, electrical, and civil engineering/site work.

Minor Group- 4 Characters. Generally Minor Groups designate assemblies or

Modifier- 4 Characters (Optional). This is an optional field for further differentiation of drawing element such as distinguishing full height walls from partial height walls or emergency lighting from general lighting.

User Defined- 1-8- Characters (Optional). This optional field may be used to accommodate special project requirements.

Examples

A-Wall	Walls
A-Door-Iden	Door Numbers

Short Format

Major Group- 1 character.
Minor Group- 2 character.
Modifier- 2 characters (Optional).
User Defined- 1-2 characters (Optional).

Examples

AWA	Walls
ADOID	Door Numbers

Source: CAD Layer Guidelines, Copyright 1990, AIA Press

*Softdesk Layer Default File: c:/adcadd/aa/setup/lan/aa_layer.dat									
*Description	Keyname	Layername	Color	Linetype	Trade	Plan	Level	Modifier	Auto Create
~ Architectural									
Appliances	APPL	A-FLOR-APPL	9	CONTINUOUS	0	0	1	1	0
Case work	CASE	A-FLOR-CASE	10	CONTINUOUS	0	0	1	1	0
Casework tags	CASENO	A-CASE-IDEN	1	CONTINUOUS	0	0	1	1	0
Ceiling major features	CEIL	A-CLNG	5	CONTINUOUS	0	0	1	1	0
Ceiling objects	CEILOBJ	A-CLNG	10	CONTINUOUS	0	0	1	1	0
Ceiling grid	CEILGRID	A-CLNG-GRID	5	CONTINUOUS	0	0	1	1	0
Columns	COLUMN	S-COLS	4	CONTINUOUS	0	0	1	1	0
Construction tags	CONSTNO	A-CONS-IDEN	1	CONTINUOUS	0	0	1	1	0
Demolition tags	DEMONO	A-DEMO-IDEN	1	CONTINUOUS	0	0	1	1	0
Doors	DOOR	A-DOOR	10	CONTINUOUS	0	0	1	1	0
3D Doors	3DDOOR	A-DOOR-ELEV	10	CONTINUOUS	0	0	1	1	0
3D Door accessories	DOORAC	A-DOOR-ELEV	10	CONTINUOUS	0	0	1	1	0
Door elevation	DOORE	A-DOOR-ELEV	10	CONTINUOUS	0	0	1	1	0
Door elevation swing	DSWING	A-DOOR-ELEV-SYMB	10	HIDDEN	0	0	1	1	0
Door elevation swing (3D)	DSWING3D	A-DOOR-ELEV-SYMB	10	HIDDEN	0	0	1	1	0
Door swing arc plan	DSWINGP	A-DOOR-SWG	10	HIDDEN	1	0	1	1	0
Door jamb	DJAMB	A-WALL-JAMB	8	CONTINUOUS	0	0	1	1	0
3D Door jamb	3DDJAMB	A-WALL-JAMB-ELEV	8	INVISIBLE	0	0	1	1	0
2D Door sills	DSILL	A-DOOR-SILL	9	CONTINUOUS	0	0	1	1	0
Door and window Headers	HEADER	A-WALL-HEAD	15	INVISIBLE	0	0	1	1	0
Door tags	DOORNO	A-DOOR-IDEN	1	CONTINUOUS	0	0	1	1	0
Disabled access guides	HANDICLR	A-AREA-INFO		CONTINUOUS	0	1	1	0	0
Electrical components	ELEC	E-LITE	11	CONTINUOUS	0	0	1	1	0
Electrical tags	ELECNO	E-LITE-IDEN	11	CONTINUOUS	0	0	1	1	0
Equipment	EQUIP	A-EQUI	7	CONTINUOUS	0	0	0	0	0
Equipment tags	EQUIPNO	A-EQUI-IDEN	1	CONTINUOUS	0	0	1	1	0
Finish tag: Base	FINBASE	A-WALL-IDEN	1	CONTINUOUS	0	0	1	1	0
Finish tag: Ceiling	FINCEIL	A-CLNG-IDEN	1	CONTINUOUS	0	0	1	1	0
Finish tag: Floor	FINFLOOR	A-FLOR-IDEN	1	CONTINUOUS	0	0	1	1	0
Finish tag: Combo	FINCALL	A-WALL-IDEN	1	CONTINUOUS	0	0	1	1	0
Finish tag: Wall	FINWALL	A-WALL-IDEN	1	CONTINUOUS	0	0	1	1	0
2D Fireplace	FIRE2D	A-FLOR-FIRE	9	CONTINUOUS	0	0	1	1	0
3D Fireplace	FIRE3D	A-FLOR-FIRE-ELEV	9	CONTINUOUS	0	0	1	1	0
3D Fireplace hearth	FHEARTH	A-FLOR-FIRE-ELEV	9	CONTINUOUS	0	0	1	1	0
3D Fireplace mantle	FMANTLE	A-FLOR-FIRE-ELEV	9	CONTINUOUS	0	0	1	1	0
2D Chimney	CHIM2D	A-ROOF-CHIM	9	CONTINUOUS	0	0	0	1	0
3D Chimney	CHIM3D	A-ROOF-CHIM-ELEV	9	CONTINUOUS	0	0	0	1	0
Framing members	FRAMING	S-FRAM	4	CONTINUOUS	0	0	1	1	0
Framing extents	FRAMEXT	S-FRAM-DIMS	5	CONTINUOUS	0	0	1	1	0
Kitchen/bath counter	CNTR	A-FLOR-WDWK	7	CONTINUOUS	0	0	1	1	0
3D Kitchen/bath counter	CNTR3D	A-FLOR-WDWK-ELEV	7	CONTINUOUS	0	0	1	1	0
Plumbing fixtures	PFIXT	P-FIXT	6	CONTINUOUS	0	0	1	1	0
Plumbing tags	TOILNO	A-PLUM-IDEN	1	CONTINUOUS	0	0	1	1	0
Toilet stalls	STALL	A-FLOR-TPTN	14	CONTINUOUS	0	0	1	1	0
Toilet stall 2D doors	STALLD2D	A-FLOR-TPTN	9	CONTINUOUS	0	0	1	1	0
Toilet stall 3D doors	STALLD3D	A-FLOR-TPTN-ELEV	6	CONTINUOUS	0	0	1	1	0

Toilet accessories	TOILACC	A-FLOR-SPCL	2	CONTINUOUS	0	0	1	1	0
Floor	FLOOR	A-FLOR-OTLN	12	CONTINUOUS	0	0	1	1	0
Floor edge	FLREDGE	A-FLOR-OTLN	12	CONTINUOUS	0	0	1	1	0
Floor grid	FLRGRID	A-FLOR-GRID	12	CONTINUOUS	0	0	1	1	0
Foundation walls	FND	S-FNDN	4	CONTINUOUS	0	0	1	1	0
3D Foundation walls	FND3D	S-FNDN-ELEV	15	CONTINUOUS	0	0	1	1	0
Footing	FOOTING	S-FNDN-FOOT	7	CONTINUOUS	0	0	1	1	0
Footing 3D	FOOTING3D	S-FNDN-FOOT-ELEV	3	CONTINUOUS	0	0	1	1	0
Furniture	FURN	A-FURN	10	CONTINUOUS	0	0	1	1	0
Furniture tags	FURNNO	A-FURN-IDEN	1	CONTINUOUS	0	0	1	1	0
Seating tags	SEATNO	A-SEAT-IDEN	1	CONTINUOUS	0	0	1	1	0
3D Furniture	FURN3D	A-FURN-ELEV	10	CONTINUOUS	0	0	1	1	0
3D Table elements	TABLE3D	A-FURN-ELEV	6	CONTINUOUS	0	0	1	1	0
Office panels	PANEL	A-FURN-PNLS	1	CONTINUOUS	0	0	1	1	0
Roof lines 2D	ROOF	A-ROOF-OTLN	11	CONTINUOUS	0	0	1	1	0
Roof faces 3D	ROOF3D	A-ROOF-ELEV	90	CONTINUOUS	0	0	1	1	0
Roof fascia & soffit 3D	ROOFSOF	A-ROOF-EDGE	20	CONTINUOUS	0	0	1	1	0
Roof slope information	ROOFTAG	A-ROOF-IDEN	1	CONTINUOUS	0	0	1	1	0
Roof gutters	ROOFGUT	A-ROOF-GUTR	9	CONTINUOUS	0	0	1	1	0
Room tags	ROOMNO	A-AREA-IDEN	2	CONTINUOUS	0	0	1	1	0
Closet shelves	SHELF	A-FLOR-WDWK	13	CONTINUOUS	0	0	1	1	0
Closet rods	ROD	A-FLOR-OVHD	6	HIDDEN	0	0	1	1	0
Site	SITE	C-PSIT	7	CONTINUOUS	0	0	1	1	0
Space planning	SPACE	A-AREA	3	CONTINUOUS	0	0	1	1	0
Sprinklers	SPRINK	F-SPRN-CLHD	5	CONTINUOUS	0	0	1	1	0
Sprinkler tags	SPRINKNO	F-SPRN-IDEN	5	CONTINUOUS	0	0	1	1	0
Stairs	STAIR	A-FLOR-STRS	2	CONTINUOUS	0	0	1	1	0
Stair handrails	STAIRH	A-FLOR-RAIL	3	CONTINUOUS	0	0	1	1	0
Stair risers	STAIRR	A-FLOR-RISR	1	HIDDEN4	0	0	1	1	0
Stair 3D treads	3DSTAIR	A-FLOR-STRS-3D	10	CONTINUOUS	0	0	1	1	0
Stair 3D riser	3DSTAIRR	A-FLOR-RISR-3D	8	CONTINUOUS	0	0	1	1	0
Stair 3D handrail	3DSTAIRH	A-FLOR-HRAL-3D	9	CONTINUOUS	0	0	1	1	0
Stair 3D balusters	3DSTAIRB	A-FLOR-BALS-3D	15	CONTINUOUS	0	0	1	1	0
Stair 3D stringers	3DSTAIRS	A-FLOR-STNG-3D	8	CONTINUOUS	0	0	1	1	0
Elevator	ELEVAT	A-FLOR-ELTR	2	CONTINUOUS	0	0	1	1	0
Walls	WALL	A-WALL	15	CONTINUOUS	0	0	1	1	0
Walls - air gap	WALLGAP	A-WALL-AGAP	15	CONTINUOUS	0	0	1	1	0
Walls - 3D	WALL3D	A-WALL-ELEV	15	CONTINUOUS	0	0	1	1	0
Walls - low	WALLL	A-WALL-PRHT	15	CONTINUOUS	0	0	1	1	0
Masonry walls	WALLM	A-WALL-MASN	2	CONTINUOUS	0	0	1	1	0
Wall center lines	WALLCL	A-WALL-CENT	1	CENTER2	0	0	1	1	0
Wall poche	POCHE	A-WALL-PATT	14	CONTINUOUS	0	0	1	1	0
Wall jamb lines (break cap)	JAMB	A-WALL-JAMB	15	CONTINUOUS	0	0	1	1	0
Wall 3D openings (non-vertical)	JAMB3D	A-WALL-ELEV	15	CONTINUOUS	0	0	1	1	0
Wall 3D head closures	3DHEAD	A-WALL-ELEV	15	INVISIBLE	0	0	1	1	0
Wall 3D sill closures	3DSILL	A-WALL-SILL-ELEV	12	INVISIBLE	0	0	1	1	0
Wall tags	WALLNO	A-WALL-IDEN	1	CONTINUOUS	0	0	1	1	0
Window glazing	WIND	A-GLAZ	13	CONTINUOUS	0	0	1	1	0
3D Windows	3DWINDOW	A-GLAZ-ELEV	5	CONTINUOUS	0	0	1	1	0
Window jamb	WJAMB	A-WALL-JAMB	14	CONTINUOUS	0	0	1	1	0
Window metal frame sill	WSJAMB	A-GLAZ-JAMB	14	CONTINUOUS	0	0	1	1	0

Window sills	WSILL	A-GLAZ-SILL	12	CONTINUOUS	0	0	1	1	0
Window footers	FOOTER	A-WALL-PRHT	11	CONTINUOUS	0	0	1	1	0
Footers below sills	FOOTERH	A-WALL-PRHT	15	INVISIBLE	0	0	1	1	0
Glazing: Normal (3D)	3DGLAZE	A-GLAZ-ELEV	5	CONTINUOUS	0	0	1	1	0
Glazing: Special (3D)	3DGLAZE2	A-GLAZ-ELEV	5	CONTINUOUS	0	0	1	1	0
Window and Door Casing (3D)	3DCASE	3DCASE	10	CONTINUOUS	0	0	1	1	0
Window and Door Trim (3D)	3DTRIM	3DTRIM	10	CONTINUOUS	0	0	1	1	0
Window elevation	WINDEL	A-GLAZ-ELEV	5	CONTINUOUS	0	0	1	1	0
Window elevation swing	WSWING	A-GLAZ-ELEV-SYMB	3	HIDDEN	0	0	1	1	0
Window plan swing arc	WSWINGP	A-GLAZ	13	CONTINUOUS	1	0	1	1	0
Window elevation swing (3D)	WSWING3D	A-GLAZ-ELEV-SYMB	3	HIDDEN	0	0	1	1	0
Window tags	WINDNO	A-GLAZ-IDEN	1	CONTINUOUS	0	0	1	1	0
Parking symbols	PRK-SYM	C-PKNG	7	CONTINUOUS	0	0	1	1	0
Parking stalls	PRK-STALL	C-PKNG-STRP	7	CONTINUOUS	0	0	1	1	0
Site utilities	UTIL	C-PULT	7	CONTINUOUS	0	0	1	1	0
Drainage symbols	DRAINAGE	C-STRM	7	CONTINUOUS	0	0	1	1	0
People	PEOPLE	A-ELEV-SYMB	7	CONTINUOUS	0	0	1	1	0
Plants - outdoor	PLANTS	L-PLNT	3	CONTINUOUS	0	0	1	1	0
Plants - indoor	PLANTSI	A-FURN-PLNT	3	CONTINUOUS	0	0	1	1	0
Vehicles	VEHICLES	C-PKNG-CARS	6	CONTINUOUS	0	0	1	1	0
Structural steel	STEEL	S-FRAM	7	CONTINUOUS	0	0	1	1	0
Elevation (misc.)	ELEV	A-ELEV	10	CONTINUOUS	0	0	1	1	0
Elevation mark	ELEVMRK	A-DETL	1	CONTINUOUS	0	0	1	1	0
Elevation text	ELEVTXT	A-DETL	1	CONTINUOUS	0	0	1	1	0
Section (misc.)	SECT	A-SECT	2	CONTINUOUS	0	0	1	1	0
Shadows	SHADOW	C-BLDG-PATT	8	CONTINUOUS	0	0	1	1	0
~ Line Layers									
Thin lines	THIN	THIN	1	CONTINUOUS	1	1	1	1	0
X-Fine lines	XFINE	XFINE	14	CONTINUOUS	1	1	1	1	0
Color (halftone) lines	COLOR	COLOR	6	CONTINUOUS	1	1	1	1	0
~ Text Layers									
X-Fine text	TEXTXF	TEXTXF	3	CONTINUOUS	1	1	1	1	0
Fine text	TEXTF	TEXTF	1	CONTINUOUS	1	1	1	1	0

ARCHITECTURAL ABBREVIATIONS

A/C	AIR CONDITIONING
AB	ANCHOR BOLT
ABV	ABOVE
AC	ACOUSTICAL
ACC	ACCESS
ACFL	ACCESS FLOOR
ACP	ACOUSTICAL CLNG PANEL
ACPL	ACOUSTICAL PLASTER
ACR	ACRYLIC PLASTER
ACT	ACOUSTICAL PLASTER
ACT	ACOUSTICAL TILE
AD	AREA DRAIN
ADD	ADDENDUM
ADH	ADHESIVE
ADJ	ADJUSTABLE
ADJT	ADJACENT
AFF	ABOVE FINISHED FLOOR
AGG	AGGREGATE
AHU	AIR HANDLING UNIT
ALT	ALTERNATE
ALUM	ALUMINUM
ANC	ANCHOR(AGE)
ANOD	ANODIZED
AP	ACCESS PANEL
AP	ACCESS POINT
APPROX	APPROXIMATE
APT	APARTMENT
ARCH	ARCHITECT(URAL)
ASB	ASBESTOS
ASC	ABOVE SUSPENDED CLNG
ASPH	ASPHALT
AT	ASPHALT TILE
AUTO	AUTOMATIC
BBD	BULLETIN BOARD
BBR	BASEBOARD RADIATION
BD	BOARD
BEL	BELOW
BIT	BITUMINOUS
BJT	BED JOINT
BLDG	BUILDING
BLK	BLOCK
BLKG	BLOCKING
BLST	BLUESTONE
BM	BEAM
BMK	BENCH MARK
BOT	BOTTOM
BP	BACK PLASTERED
BPL	BEARING PLATE
BRG	BEARING
BRK	BRICK
BRZ	BRONZE
BS	BOTH SIDES
BSMT	BASEMENT
BTWN	BETWEEN
BUR	BUILT UP ROOF
BVL	BEVELED
BW	BOTH WAYS
CAB	CABINET
CAD	CADMIUM
CB	CATCH BASIN
CEM	CEMENT
CF	CUBIC FOOT
CFL	COUNTER FLASHING
CG	CORNER GUARD
CHAM	CHAMFER
CHBD	CHALKBOARD
CHT	CEILING HEIGHT
CI	CAST IRON
CIPC	CAST-IN-PLACE CONC
CIR	CIRCLE
CIRC	CIRCUMFERENCE
CJ	CONTROL JOINT
CLG	CEILING
CLK	CAULK
CLKG	CAULKING
CLL	CONTRACT LIMIT LINE
CLR	CLEAR
CLS	CLOSURE
CMT	CERAMIC MOSAIC TILE
CMU	CONC MASONRY UNIT
COL	COLUMN
COMB	COMBINATION
COMP	COMPRESS(ED)(ION)(IBLE)
COMPO	COMPOSITE
COMPT	COMPARTMENT
CONC	CONCRETE
CONST	CONSTRUCTION
CONT	CONTINUOUS
CONTR	CONTRACTOR
COR	CORRUGATED
CORR	CORRIDOR
CPG	COPING
CPR	COPPER
CPT	CARPET
CR	CHROMIUM PLATED
CRG	CROSS GRAIN
CRS	COURSE(S)
CS	COUNTERSINK
CSMT	CASEMENT
CST	CAST STONE
CT	CERAMIC TILE
CTHK	COATHOOK
CTR	COUNTER
CTSK	COUNTERSUNK SCREW
CX	CONNECTION
CY	CUBIC YARD
D	DRAIN
DA	DOUBLE ACTING
DEM	DEMOLISH, DEMOLITION
DEP	DEPRESSED
DET	DETAIL
DF	DRINKING FOUNTAIN
DH	DOUBLE HUNG
DIAG	DIAGONAL
DIAM	DIAMETER
DIM	DIMENSION
DIV	DIVISION
DL	DEAD LOAD
DMPR	DAMPER
DMT	DEMOUNTABLE
DN	DOWN
DP	DAMPROOFING
DPL	DISPOSAL
DPR	DISPENSER
DR	DOOR
DRB	DRAINBOARD
DS	DOWNSPOUT
DT	DRAIN TILE
DTA	DOVETAIL ANCHOR
DTS	DOVETAIL ANCHOR SLOT
DW	DISHWASHER
DWG	DRAWING
DWR	DRAWER
DWTR	DUMBWAITER
E	EAST
EA	EACH
EB	EXPANSION BOLT
EF	EXHAUST FAN
EJ	EXPANSION JOINT
EL	ELEVATION
ELEC	ELECTRIC(AL)
ELEV	ELEVATOR
EMER	EMERGENCY
ENCL	ENCLOSURE
EPBD	ELECTRIC PANELBOARD
EPS	EXTERIOR PAINT SYSTEM
EQ	EQUAL
EQPT	EQUIPMENT
ESCL	ESCALATOR
ESTM	ESTIMATE
EV	EXPANSION BOLT
EWC	ELECTRIC WATER COOLER
EXCA	EXCAVATE
EXG	EXISTING
EXH	EXHAUST
EXMP	EXPANDED METAL PLATE
EXP	EXPOSED
EXS	EXTRA STRONG
EXT	EXTERIOR
FA	FIRE ALARM
FAI	FRESH AIR INTAKE
FAS	FASTENER
FB	FACE BRICK
FBD	FIBERBOARD
FBO	FURNISHED BY OTHERS
FBRK	FIRE BRICK
FD	FLOOR DRAIN
FE	FIRE EXTINGUISHER
FEC	FIRE EXTINGUISHERCAB
FF	FACTORY FINISH
FFE	FINISHED FLR ELEVATION
FFL	FINISHED FLOOR LINE
FG	FIXED GLASS
FGL	FIBERGLAS
FHMS	FLATHEAD MACH SCREW
FHS	FIRE HOSE STATION
FHWS	FLATHEAD WOOD SCREW
FIN	FINISH(ED)
FIXT	FIXTURE
FJT	FLUSH JOINT
FLCO	FLOOR CLEANOUT
FLG	FLASHING
FLR	FLOOR
FLUR	FLUORESCENT
FLX	FLEXIBLE
FN	FENCE
FNDN	FOUNDATION
FOC	FACE OF CONCRETE
FOF	FACE OF FINISH
FOM	FACE OF MASONRY
FOS	FACE OF STUDS
FP	FIREPROOF
FPG	FIREPROOFING
FPL	FLOOR PLATE
FR	FRAME(D)(ING)
FRC	FIRE RESISTANT COATING
FRGD	FORGED
FRPL	FIREPLACE
FRT	FIRE RETARD TREATED
FS	FULL SIZE
FTG	FOOTING
FURR	FURRED, FURRING
FUT	FUTURE
GA	GAUGE
GALV	GALVANIZED
GB	GRAB BAR
GC	GENERAL CONTRACTOR
GF	GROUND FACE
GI	GALVANIZED IRON
GKT	GASKET

GL	GLASS, GLAZING
GLB	GLASS BLOCK
GLF	GLASS FIBER
GP	GALVANIZED PIPE
GPDW	GYPSUM DRYWALL
GPL	GYPSUM LATH
GPPL	GYPSUM PLASTER
GPT	GYPSUM TILE
GRD	GRADE, GRADING
GRN	GRANITE
GRPG	GLASS REINF POLY GYP
GSS	GALVANIZED SHT STEEL
GST	GLAZED STRUCTURAL TILE
GT	GROUT
GVL	GRAVEL
GWB	GYPSUM WALLBOARD
GYP	GYPSUM
H/C	HANDICAP(PED)
HB	HOSE BIBB
HBD	HARDBOARD
HC	HOLLOW CORE
HD	HEAVY DUTY
HDNR	HARDENER
HDR	HEADER
HDWR	HARDWARE
HES	HIGH EARLY STR CEMENT
HH	HANDHOLE
HJT	HEADJOINT
HK	HOOK
HKS	HOOKS
HM	HOLLOW METAL
HORZ	HORIZONTAL
HPT	HIGH POINT
HR	HOUR
HT	HEIGHT
HTG	HEATING
HVAC	HEAT, VENT & AIR COND
HWD	HARDWOOD
HWH	HOT WATER HEATER
HX	HEXAGONAL
ID	INSIDE DIAMETER
ILK	INTERLOCK
INCIN	INCINERATOR
INCL	INCLUDE(D), INCLUDING
INS	INSULATE, INSULATION
INSC	INSULATING CONCRETE
INSF	INSULATING FILL
INT	INTERIOR
INTM	INTERMEDIATE
INV	INVERT
IPS	INTERIOR PAINT SYSTEM
JC	JANITOR'S CLOSET
JF	JOINT FILLER
JST	JOIST
JT	JOINT
KIT	KITCHEN
KO	KNOCKOUT
KPL	KICK PLATE
L	LENGTH
LAB	LABORATORY
LAD	LADDER
LAM	LAMINATE(D)
LAV	LAVATORY
LB	LAG BOLT
LBL	LABEL
LC	LIGHT CONTROL
LF	LINEAR FOOT
LH	LEFT HAND
LL	LIVE LOAD
LMS	LIMESTONE
LPT	LOW POINT
LT	LIGHT
LTL	LINTEL
LVR	LOUVER
LW	LIGHT WEIGHT
LWC	LIGHT WEIGHT CONCRETE
LWF	LIGHT WEIGHT FILL
M	METER(S)
MAS	MASONRY
MAX	MAXIMUM
MB	MACHINE BOLT
MBR	MEMBER
MC	MEDICINE CABINET
MECH	MECHANICAL
MED	MEDIUM
MET	METAL
MFD	METAL FLOOR DECKING
MFR	MANUFACTURER
MH	MAN HOLE
MI	MALLEABLE IRON
MIN	MINIMUM
MIR	MIRROR
MISC	MISCELLANEOUS
MLDG	MOLDING
MM	MILLIMETER(S)
MMB	MEMBRANE
MO	MASONRY OPENING
MOD	MODEL
MODU	MODULAR
MOV	MOVABLE
MR	MOP RECEPTOR
MRB	MARBLE
MT	MOUNT
MTD	MOUNTED
MTHR	METAL THRESHOLD
MTL	MATERIAL
MULL	MULLION
MWK	MILLWORK
N	NORTH
NAT	NATURAL
NCX	NONCOMBUSTIBLE EXT
NI	NICKEL
NIC	NOT IN CONTRACT
NL	NAILABLE
NMT	NONMETALLIC
NOM	NOMINAL
NR	NOISE REDUCTION
NRC	NOISE REDU COEFFICIENT
NTS	NOT TO SCALE
OA	OVERALL
OBS	OBSCURE
OC	ON CENTER
OD	OUTSIDE DIAMETER
OH	OVERHEAD
OHMS	OVALHEAD MACH SCREW
OHWS	OVALHEAD WOOD SCREW
OJ	OPEN-WEB JOINT(S)
OP	OPAQUE
OPH	OPPOSITE HAND
OPNG	OPENING
OPP	OPPOSITE
OPS	OPPOSITE SURFACE
PAR	PARALLEL
PB	PANIC BAR
PBD	PARTICLE BOARD
PCC	PRECAST CONCRETE
PCF	POUNDS PER CUBIC FOOT
PE	PORCELAIN ENAMEL
PERF	PERFORATE(D)
PERI	PERIMETER
PFB	PREFABRICATE(D)
PFN	PREFINISHED
PFS	POUNDS PER SQ FOOT
PG	PLATE GLASS
PIR	PAPER TOWEL RECEPTOR
PK	PARKING
PL	PROPERTY LINE
PLAM	PLASTIC LAMINATE
PLAS	PLASTER
PLF	POUNDS PER LIN FOOT
PLT	PLATE
PMT	PAVEMENT
PNL	PANEL
PNT	PAINT
PNTD	PAINTED
POLY	POLYETHYLENE
PR	PAIR
PRF	PREFORMED
PSC	PRESTRESSED CONCRETE
PSF	POUNDS PER SQ FOOT
PSI	POUNDS PER SQ INCH
PT	POINT
PTC	POST-TENSIONEDCONC
PTD	PAPER TOWEL DISPENSER
PTN	PARTITION
PTR	PAPER TOWEL RECEPTOR
PVC	POLYVINYL CHLORIDE
PVG	PAVING
PVMT	PAVEMENT
PWD	PLYWOOD
QT	QUARRY TILE
R	RISER
RA	RETURN AIR
RAD	RADIUS
RAG	RETURN AIR GRILLE
RAI	RETURN AIR INTAKE
RB	RUBBER BASE
RBL	RUBBLE STONE
RBT	RABBET
RCP	REINFORCED CONC POPE
RD	ROOF DRAIN
RE	REINFORCE(D),
REF	REFERENCE
REG	REGISTER
REM	REMOVE
REQD	REQUIRED
REQS	REQUIREMENTS
RES	RESILIENT
RET	RETURN
RETG	RETAINING
REV	REVISION
RFG	ROOFING
RFH	ROOF HATCH
RFL	REFLECT(ED)(IVE)(OR)
RH	RIGHT HAND
RL	RAIL(ING)
RM	ROOM
RO	ROUGH OPENING
ROW	RIGHT OF WAY
RT	FIRE RETARD TREATED
RT	RUBBER TILE
RTG	RATING
RV	ROOF VENT
RVS	REVERSE SIDE
RVT	RIVET
RWC	RAINWATER CONDUCTOR
RWL	RAINWATER LEADER
S	SOUTH
SC	SOLID CORE
SCH	SCHEDULE
SCN	SCREEN
SCT	STRUCTURAL CLAY TILE
SD	STORM DRAIN
SECT	SECTION
SF	SQUARE FOOT
SFGL	SAFETY GLASS
SG	SHEET GLASS
SH	SHELF, SHELVING
SHO	SHORE, SHORING
SHT	SHEET
SHTH	SHEATHING
SIM	SIMILAR
SKLT	SKYLIGHT

SL	SOLID CORE
SLNT	SEALANT
SP	SOUNDPROOF
SPC	SPACER
SPEC	SPECIFICATION
SPECS	SPECIFICATIONS
SPKR	SPEAKER
SPL	SPECIAL
SQ	SQUARE
SSK	SERVICE SINK
SSTL	STAINLESS STEEL
STA	STATION
STD	STANDARD
STG	SEATING
STL	STEEL
STOR	STORAGE
STRUC	STRUCTURAL
SUS	SUSPEND(ED)
SYM	SYMETRICAL
SYN	SYNTHETIC
SYS	SYSTEM
T	TREAD
T&B	TOP AND BOTTOM
T&G	TONGUE AND GROOVE
TB	TOWEL BAR
TC	TERRA COTTA
TEL	TELEPHONE
TEMP	TEMPORARY
THK	THICK(NESS)
THR	THRESHOLD
TKB	TACKBOARD
TKS	TACK STRIP
TMPD	TEMPERED
TOC	TOP OF CURB
TOL	TOLERANCE
TOM	TOP OF MASONRY
TOS	TOP OF STEEL
TP	TACK PANEL
TPD	TOILET PAPER DISPENSER
TPL	TOP OF PLATE
TPTN	TOILET PARTITION
TR	TRANSOM
TR	TREAD
TSL	TOP OF SLAB
TV	TELEVISION
TW	TOP OF WALL
TYP	TYPICAL
TZ	TERRAZZO
UC	UNDERCUT
UGD	UNDERGROUND
UNF	UNFINISHED
UR	URINAL
VAR	VARNISH
VAT	VINYL ASBESTOS TILE
VB	VAPOR BARRIER
VERT	VERTICAL
VF	VINYL FABRIC
VG	VERTICAL GRAIN
VIF	VERIFY IN FIELD
VIN	VINYL
VJ	V-JOINTED
VNB	VINYL BASE
VNR	VENEER
VPR	COPPER
VRM	VERMICULITE
VT	VINYL TILE
VWC	VINYL WALL COVERING
W	WEST
W/	WITH
W/O	WITHOUT
WB	WOOD BASE
WC	WATER CLOSET
WD	WOOD
WG	WIRE GLASS
WH	WALL HUNG
WHB	WHEEL BUMPER
WI	WROUGHT IRON
WIN	WINDOW
WM	WIRE MESH
WP	WATERPROFFING
WPR	WATER REPELLENT
WPT	WORKING POINT
WR	WASTE RECEPTACLE
WRP	WATER REPELLANT
WS	WATER STOP
WSCT	WAINSCOT
WTW	WALL TO WALL
WWF	WELDED WIRE FABRIC
WWM	WELDED WIRE MESH

WILDCARD CHARACTERS

- * Matches any string. It can be used anywhere in the search pattern; at the beginning, middle, or end of string.
- ? Matches any single character; alphabetic, numeric, and non-alphameric (i.e. $ or !).
- @ Matches a single alphabetic character.
- # Matches a single numeric character.
- . Matches a single non-alphameric character.
- ~ If a tilde "~" is the first character in pattern, then AutoCAD lists everything except the string that follows. You can think of it as meaning "anything but...", or "not...".
- [...] Brackets match any one of the literal characters enclosed between them. Wildcards such as # or @ would be taken literally. Exceptions include the hyphen "-" and tilde "~" characters.
- [~...] Matches any character not enclosed. The tilde must be the first character within the brackets or it will be treated literally.
- - When a hyphen is used inside brackets, it specifies a range. To specify a literal hyphen "-", make it the first or last bracketed character (as in [-AB] or [AB-]).
- , Commas act as a multi-pattern separator (i.e. A*, B*).

WILD CARD PATTERNS:

Pattern	Will match or include...	But not...
ABC	Only ABC	
~ABC	Anything but ABC	
A?C	Any 3 characters sequence beginning with A and ending with C.	AC, ABCD, AXXC, or XABC
AB?	ABA through ABZ	AB, ABCE, or XAB
?BC	ABC through XBC	AB, ABCD, BC, or XXBC
A*C	AAC, AC, ABC, AXXC, etc.	XA or ABCD
A*	Anything starting with A	XAAA
*AB	Anything ending with AB	ABX
AB	AB anywhere in string	AXB
~*AB*	All strings without AB	AB, ABX, XAB, or XABX
'*AB	*AB	AB, XAB, or *ABC
[AB]C	AC or BC	ABC, or XAC
[~AB]C	XC or YC	AC, BC, or XXC
[A-J]C	AC, BC, through JC	ABC, AJC, or MC
[-A-J]C	Any character not in the range A-J, followed by C.	AC, BC, or JC

AUTOCAD GENERAL ERROR RECOVERY AND POSSIBLE CAUSES

Almost all errors are caused by corruption of one of the following:

1. The drawing file that AutoCAD is reading
2. The temporary files that AutoCAD has generated
3. AutoCAD's working environment under MS WINDOWS.

Drawing files can be corrupted due to several reasons: disk drives may need cleaning and alignment, a voltage spike during a read or write to disk can corrupt data, the disk drive may be highly fragmented, over-heated, etc. Remember that you cannot recover the drawing file in question using a binary/hex editor to patch the data, or one of the popular unerase utilities under MS-DOS, like Norton Utilities. Norton's Disk Doctor also will not recover corrupted drawing files since it only relocates all the readable bytes to another area of the disk, ignoring the unreadable ones. AutoCAD drawing files are extremely sensitive and as much as one misplaced bytes can render the file unreadable. The hex dump that follows the Error message is merely a traceback of internal addresses, telling the AutoCAD programmer the sequence of most recent function calls that preceded the error. It holds little significance for the general customer.

Temporary files can be corrupted at run-time due to the reasons above, and also due to improper configuration. For example, if you are running AutoCAD on a machine with EXTended memory, ensure that AutoCAD has detected the presence of any RAM disks or partitioned EXPanded memory. If it has failed to do so, then any data that AutoCAD has paged into its Extended I/O page space runs the risk of being over-written by other information that is being written to the RAM disk or the "other memory partition".

Under MS-DOS, AutoCAD establishes and maintains a tight working environment consisting of memory blocks, data resources and software interrupts. Should an ill-behaved TSR program or a device driver alter this carefully maintained state without AutoCAD's knowledge, any data that AutoCAD is operating on runs the risk of being corrupted during execution.

Whenever these error messages occur, AutoCAD is almost certainly reporting a genuine case of data or environment corruption. On rare occasion, this may point back to a software bug within AutoCAD. These cases are almost always repeatable and occur due to a specific sequence of events; e.g., if drawing a circle and trimming it to 1/4" of its radius always generates an error in any drawing, then you may have discovered a software bug.

What do I do if I encounter one of these errors ?

First of all, don't panic. If the drawing file itself is corrupted, you will encounter the error while calling up the drawing on any machine or copy of AutoCAD. In this situation, you can either: return to the backup of the drawing file in question (backing up your data on a regular basis is critical), or use the procedure outlined in Appendix F of the Reference Manual under "Disaster Handling".

Softdesk Macros Help File

(Specific products required where indicated)

Macro Description

" - Transparent Osnap toggle
3M - 3D Mesh
3P - 3D Polyline
AC - Arc
AD - Attribute Define
AE - Area
AR - Array
BA - Break @
BF - Break First
BL - Block
BR - Break
BX - Box (ACAD13)
C3 - 3 Point Circle
CC - Continuous Copy
CE - Change Entity
CF - Chamfer
CH - Change
CI - Circle
CL - Change Layer (Pro-Tools)
CM - Copy Multiple
CN - Cone (ACAD13)
CO - Copy
CP - Change Property
CY - Cylinder (ACAD13)
D - Draw by Example (Pro-Tools)
DAL - Aligned dimension
DAN - Angular dimension
DBA - Baseline dimension
DCE - Center marks
DCO - Continue dimensioning
DDI - Diameter dimension
DHO - Horizontal dimension
DI - Distance
DIV - Divide
DLE - Dimension Leader (Pro-Tools)
DO - Doughnut
DOB - Oblique dimension
DOR - Ordinate dimension
DRA - Radius dimension
DRO - Rotate dimension
DS - Plot Daystamping (Pro-Tools)
DV - Dview
DVE - Vertical dimension
EA - Attribute Edit
EB - Edit Block (Pro-Tools)
EH - Edit Hatch
EL - Erase Last
ELP - Ellipse
EM - Edit Multi-Line
EP - Edit Polyline
ER - Erase
ES - Edit Spline (ACAD13)
ESU - Edge Surface
ET - Edit Text
EXP - Explode
EXT - Extend
F0 - Fillet Radius 0
FA - 3Dface
FI - Fillet Set Radius
FR - Fillet Radius
GL - Group Level
GM - Group Modifier
GP - Group Plan Type
GR - Grid
GT - Group Trade
GU - Glue (Pro-Tools)
GV - Group View
GX - Group Toggle On/Off
HA - Boundary Hatch
HD - Dynamic Hatch
HE - Help Catalogue
HI - Hide
IN - Insert
IP - Isoplane Toggle
L1 - Layer Isolate
LA - Layer Command
LC - Layer Properties
LD - Layer Dialogue
LF - Layer Off
LG - Lengthen (ACAD13)
L - Line
LI - List
LK - Layer Lock
LL - List Layer (Building Base)
LO - Layer On
LS - Layer Set
LSP - Load Lisp
LSU - Ruled Surface
LT - Layer Thaw
LU - Layer Unlock
LVP - Viewport Layer Controls
LZ - Layer Freeze
MB - Make Block (Pro-Tools)
ME - Measure
MI - Mirror
ML - Multi-Line
MN - Menu Command
MO - Move
MS - Mspace
MV - Mview
OF - Offset
OP - Oops
OS - Osnap
PA - Pan
PE - Pedit
PG - Polygon
PL - Pline
PN - Plan
PO - Point
PR - Print/Plot
PS - Pspace
QC - Quick Copy (Pro-Tools)
QM - Quick Move (Pro-Tools)
QU - Quit
RB - Redefine Block (Pro-Tools)
RC - Rectangle

RE - Redrawall
RG - Regenall
RL - Ray Line
RO - Rotate
ROC - Rotate Copy
RQ - Rotate Quick (Building Base)
RS - Reset Settings
RSU - Revolution Surface
SA - Save
SC - Scale
SD - Change Softdesk Product
SE - Select
SK - Sketch
SN - Snap
SO - Solid
SM - Symbol Manager
SP - Spell
SPH - Sphere (ACAD13)
SR - Snap Rotate
SS - Build Selection Set
ST - Stretch
STR - Stretch Remove (Building Base)
STS - Stretch Select (Building Base)
SV - System Variables
SY - Set Style
TS - Text Small
TI - Tilemode Toggle
TL - Text Large
TM - Text Medium
TO - Torus (ACAD13)
TQ - Text Quality
TR - Trim
TT - Text Title
TX - Text Medium
TXF - Text X-Fine (Building Base)
UB - Undo Back
UC - UCS
UM - Undo Mark
UP - UCS Previous
UV - UCS View
UW - UCS World
VA - View ALL
VI - View
VP - Vports
VR - View Restore
VS - Vslide
VT - Vpoint
WB - Wblock
WC - Window Copy
WD - Wedge (ACAD13)
WE - Window Erase
WH - Window Change
WM - Window Move
WP - Window Chprop
WR - Window Rotate
WS - Window Scale
XL - Infinite Line
XP - Explode
XSU - Extruded Surface
XT - Extend
YC - Layer Copy (Pro-Tools)
YE - Layer Erase (Pro-Tools)
YH - Layer Change
YM - Layer Move
YP - Layer Chprop
YR - Layer Rotate
YS - Layer Scale
ZA - Zoom All
ZC - Zoom Center
ZD - Zoom Dynamic
ZE - Zoom Extents
ZF - Zoom Left
ZI - Zoom In
ZL - Zoom Limits
ZM - Zoom View Max
ZO - Zoom Out
ZP - Zoom Previous
ZW - Zoom Window

Linetypes are to confirm to the following definations

```
*BORDER,__ __ . __ __ . __ __ . __ __ . __ __ . __ __ . __ __ .
A,.5,-.25,.5,-.25,0,-.25
*BORDER2,__.__.__.__.__.__.__.__.__.__.__.__.__.__.__.__.__.__.__.__.__.__
A,.25,-.125,.25,-.125,0,-.125
*BORDERX2,____ ____ . ____ ____ . ____ ____ . ____ ____ .
A,1.0,-.5,1.0,-.5,0,-.5

*CENTER,____ _ ____ _ ____ _ ____ _ ____ _ ____ _ ____ _ ____ _ ____ _
A,1.25,-.25,.25,-.25
*CENTER2,___ _ ___ _ ___ _ ___ _ ___ _ ___ _ ___ _ ___ _ ___ _ ___ _ _
A,.75,-.125,.125,-.125
*CENTERX2,________ __ ________ __ ________ __ ________ __ ____
A,2.5,-.5,.5,-.5

*DASHDOT,__ . __ . __ . __ . __ . __ . __ . __ . __ . __ . __ . __ . _
A,.5,-.25,0,-.25
*DASHDOT2,_._._._._._._._._._._._._._._._._._._._._._._._._._._._._._._._.
A,.25,-.125,0,-.125
*DASHDOTX2,____ . ____ . ____ . ____ . ____ . ____ . ____
A,1.0,-.5,0,-.5

*DASHED,__ __ __ __ __ __ __ __ __ __ __ __ __ __ __ __ __ __ __ __ __ __
A,.5,-.25
*DASHED2,_ _ _ _
```

```
*CENTER4,___ _ ___ _ ___ _ __ (1/2 of Center2)__ _ ___ _ ___ _ ___ _ _
A,.375,-.0625,.0625,-.0625
*CENTER8,___ _ ___ _ ___ _ __ (1/2 of Center4)__ _ ___ _ ___ _ ___ _ _
A,.1875,-.03125,.03125,-.03125

;; Auto-Arch CenterF is like ACAD Center, but has finer spacing around dash
*CENTERF,_____ _ _____ (Finer short dashes than Center) _____
A,1.25,-.125,.125,-.125
;; Auto-Arch CenterF2 is like ACAD Center2, but has finer spacing around dash
*CENTERF2,___ _ ___ _ ___ _ ___ _ ___ _ ___ _ ___ _ ___ _ ___ _ ___ _ _
A,0.75,-0.0625,0.0625,-0.0625
;; Auto-Arch additions for finer linetypes.
*CENTERF4,___ _ ___ _ ___ _ __ (1/2 of CenterF2)__ _ ___ _ ___ _ ___ _ _
A,.375,-.03125,.03125,-.03125
*CENTERF8,___ _ ___ _ ___ _ __ (1/2 of CenterF4)__ _ ___ _ ___ _ ___ _ _
A,.1875,-.0015625,.0015625,-.0015625

;; Auto-Arch additions for finer linetypes.
*DASHED4,_ _ _ _ _ _ _ _ (1/2 of Dashed2)_ _ _ _ _ _ _ _ _ _ _ _ _ _ _ _
A,.125,-.0625
*DASHED8,_ _ _ _ _ _ _ _ (1/2 of Dashed4)_ _ _ _ _ _ _ _ _ _ _ _ _ _ _ _
A,.0625,-.03125


*DEMOx2,____      ____      ____      ____      ____
A,.250,-.5
*DEMO,__   __   __   __   __   __   __   __   __   __   __
A,.125,-.25
*DEMO2,_ _ _ _ _ _ _ _ _ _ _ _ _ _ _ _ _ _ _ _ _ _ _ _
A,.0625,-.125
*DEMO4,_ _ _ _ _ _  (1/2 of Demo2) _ _ _ _ _ _ _ _ _ _ _
A,.0625,-.125
*DEMO8,_ _ _ _ _ _  (1/2 of Demo4) _ _ _ _ _ _ _ _ _ _ _
A,.03125,-.0625

*INVISIBLE,.       (Dot at endpoints only)            .
A,0,-1000

;; Auto-Arch additions for finer linetypes.
*DOT4,....................(1/2 of Dot2)...............................
A,0,-.06125
*DOT8,....................(1/2 of Dot4)...............................
A,0,-.03125
*DOT16,...................(1/2 of Dot8)...............................
A,0,-.0015625

*HIDDEN4,_ _ _ _ _ _ _ _ (1/2 of Hidden2)_ _ _ _ _ _ _ _ _ _ _ _ _ _ _ _
A,.0625,-.03125
*HIDDEN8,_ _ _ _ _ _ _ _ (1/2 of Hidden4)_ _ _ _ _ _ _ _ _ _ _ _ _ _ _ _
A,.03125,-.015

*PHANTOM4,___ _ _ ___ _ _ (1/2 of Phantom2)__ _ _ ___ _ _ ___ _ _ ___ _ _
A,.3125,-.0625,.0625,-.0625,.0625,-.0625
*PHANTOM8,___ _ _ ___ _ _ (1/2 of Phantom4)__ _ _ ___ _ _ ___ _ _ ___ _ _
A,.15625,-.03125,.03125,-.03125,.03125,-.03125

*CONTOUR,_______  _______  _______  _______  _______  _______  _______  _______
A,.375,-.09375
*CONTOUR2,____ ____ ____ ____ ____ ____ ____ ____ ____ ____ ____ ____
A,.25,-.0625
*COLDWR,___ _ ____ _ _____ _ _____ _ _____ _ ____
A,.25,-0.075,0.075,-0.075
*HOTWR,___ _ _ ___ _ _ ___ _ _ ___ _ _ ___ _ _ ___
```

```
A,.25,-0.075,0.075,-0.075,0.075,-0.075
*HCW,_____ _ _ _ _____ _ _ _ _____ _ _ _ _____
A,1,-0.125,0.125,-0.125,0.125,-0.125,0.125,-0.125
*BOUNDARY,___________ __ __ ___________ __ __ ______
A,1.75,-0.125,0.125,-0.125,0.125,-0.125
*BOUNDARY2,_____ _ _ _____ _ _ _____ _ _ _____ _ _ _____
A,1,-0.0625,0.0625,-0.0625,0.0625,-0.0625
*STREAM,_________ . . ___________ . . ___________
A,1,-0.125,0,-0.125,0,-0.125
*PNEUM,__ ___ ___ ___ ___ ___ ___ ___ ___ ___ __
A,0.2,-0.1,0.2,-0.1
*WASTE,__ __ __ __ __ __ __ __ __ __ __ __ __ __
A,.25,-.125
*2DASHES,____ _ _ _____ _ _ ____ _ _ ____ _ _ ____
A,0.75,-0.25,0.1,-0.25,0.1,-0.25
*EWIREUP,__ . __ . __ . __ . __ . __ . __ . __ .__
A,.25,-.075,0,-.075
*EWCELL,___ ___ . ___ ___ . __ __ . __ __ . __ __
A,.25,-.075,.25,-.075,0,-.075

;; Additional linetype for details
*EVENDASH,--  --  --  --  --  --  --  --  --  --  --
A,.125,-.125

;; Additional Plumbing linetypes
*DCW,Domestic Cold Water ___ _ _____ _ ____
A,1.25,-0.06,0.08,-0.06
*DCW2,Domestic Cold Water __ _ _____ _ _____ _ ____
A,.625,-0.03,0.04,-0.03
*DCWX2,Domestic Cold Water _____ ___ _____
A,2.5,-0.12,0.16,-0.12
*DHW,Domestic Hot Water ___ _ _ _____ _ _ ____
A,1.25,-0.06,0.08,-0.06,0.08,-0.06
*DHW2,Domestic Hot Water __ _ _ _____ _ _ ____ _ _ __
A,.625,-0.03,0.04,-0.03,0.04,-0.03
*DHWX2,Domestic Hot Water _____ ___ ___ ___ _____
A,2.5,-0.12,0.16,-0.12,0.16,-0.12
*DHWR,Domestic Hot Wtr Return _____ __ __ __ _____
A,1.25,-0.06,0.08,-0.06,0.08,-0.06,0.08,-0.06
*DHWR2,Domestic Hot Wtr Return ___ _ _ _ _____
A,.625,-0.03,0.04,-0.03,0.04,-0.03,0.04,-0.03
*DHWRX2,Domestic Hot Wtr Return ____ ___ ____ ____ ____
A,2.5,-0.12,0.16,-0.12,0.16,-0.12,0.16,-0.12
*VENT,Sanitary Vent Pipe __ __ __ __ __ __ __ __ __ __
A,0.16,-0.08
*VENT2,Sanitary Vent Pipe _ _ _ _ _ _ _ _ _ _ _ _ _ _ _
A,0.08,-0.04
*VENTX2,Sanitary Vent Pipe ____  ____  ____  ___
A,0.32,-0.16
*COND,Steam Condensate __ __ __ __ __ __ __ __ __ __ __
A,0.16,-0.08
*COND2,Steam Condensate _ _ _ _ _ _ _ _ _ _ _ _ _ _ _
A,0.08,-0.04
*CONDX2,Steam Condensate ____  ____  ____  ____
A,0.32,-0.16
```

TEXT HEIGHT CONVERSION CHART

Drawing Scale	Plotted Text Height	Text Input Scale, in inches
3/32" = 1'-0"	3/32"	13.5
3/32" = 1'-0"	1/8"	18
3/32" = 1'-0"	1/4"	36
1/8" = 1'-0"	3/32"	9
1/8" = 1'-0"	1/8"	12
1/8" = 1'-0"	1/4"	24
3/16" = 1'-0"	3/32"	6.75
3/16" = 1'-0"	1/8"	9
3/16" = 1'-0"	1/4"	18
1/4" = 1'-0"	3/32"	4.5
1/4" = 1'-0"	1/8"	6
1/4" = 1'-0"	1/4"	12
3/8" = 1'-0"	3/32"	3
3/8" = 1'-0"	1/8"	4
3/8" = 1'-0"	1/4"	8
1/2" = 1'-0"	3/32"	2.25
1/2" = 1'-0"	1/8"	3
1/2" = 1'-0"	1/4"	6
3/4" = 1'-0"	3/32"	1.5
3/4" = 1'-0"	1/8"	2
3/4" = 1'-0"	1/4"	4
1 ½" = 1'-0"	3/32"	.75
1 ½" = 1'-0"	1/8"	1
1 ½" = 1'-0"	1/4"	2
3" = 1'-0"	3/32"	.375
3" = 1'-0"	1/8"	.5
3" = 1'-0"	1/4"	1

METRICATION CHART

Fraction Inches	Dec. Inches	Millimeters	Fraction Inches	Dec. Inches	Millimeters
1/64	0.0156	0.3962	33/64	0.5156	13.0962
1/32	0.0312	0.7925	17/32	0.5312	13.4925
3/64	0.0469	1.1913	35/64	0.5469	13.8913
1/16	0.0625	1.5875	9/16	0.5625	14.2875
5/64	0.0781	1.9837	37/64	0.5781	14.6837
3/32	0.0937	2.3800	19/32	0.5937	15.0800
7/64	0.1094	2.7788	39/64	0.6094	15.4788
1/8	0.1250	3.1750	5/8	0.6250	15.8750
9/64	0.1406	3.5712	41/64	0.6406	16.2712
5/32	0.1562	3.9675	21/32	0.6562	16.6675
11/64	0.1719	4.3663	43/64	0.6719	17.0663
3/16	0.1875	4.7625	11/16	0.6875	17.4625
13/64	0.2031	5.1587	45/64	0.7031	17.8587
7/32	0.2187	5.5550	23/32	0.7187	18.2550
15/64	0.2344	5.9538	47/64	0.7344	18.6538
1/4	0.2500	6.3500	3/4	0.7500	19.0500
17/64	0.2656	6.7462	49/64	0.7656	19.4462
9/32	0.2812	7.1425	25/32	0.7812	19.8425
19/64	0.2969	7.5413	51/64	0.7969	20.2413
5/16	0.3125	7.9375	13/16	0.8125	20.6375
21/64	0.3281	8.3337	53/64	0.8281	21.0337
11/32	0.3437	8.7300	27/32	0.8437	21.4300
23/64	0.3594	9.1288	5/64	0.8594	21.8288
3/8	0.3750	9.5250	7/8	0.8750	22.2250
25/64	0.3906	9.9212	57/64	0.8906	22.6212
13/32	0.4062	10.3175	29/32	0.9062	23.0175
27/64	0.4219	10.7163	59/64	0.9219	23.4163
7/16	0.4375	11.1125	15/16	0.9375	23.8125
29/64	0.4531	11.5087	61/64	0.9531	24.2087
15/32	0.4687	11.9050	31/32	0.9687	24.6050
31/64	0.4844	12.3038	63/64	0.9844	25.0038
1/2	0.5000	12.7000	1	1.0000	25.4000

Inches X 25.40 = Millimeters
Feet X .3048 = Meters
Yards X .9144 = Meters

Millimeters X .03937 = Inches
Meters X 3.281 = Feet
Meters X 1.0936 = Yards

	INSERTION CONVERSION SCALE TABLE - IMPORTED DWG/EXISTING DWG														
IMPORTED	1"=50'	1"=40'	1"=30'	1"=20'	1"=10'	1/8"=1'	3/16"=1'	1/4"=1'	3/8"=1'	1/2"=1'	3/4"=1'	1"=1'	1.5"=1'	3"=1'	1"=1'
EXISTING															
1"=50'	1.0	1.25	1.67	2.5	5.0	6.25	9.375	12.5	18.75	25.0	37.5	50.0	75.0	150.0	600.0
1"=40'	0.8	1.0	1.33	2.0	4.0	5.0	7.5	10.0	15.0	20.0	30.0	40.0	60.0	120.0	480.0
1"=30'	0.6	0.75	1.0	1.5	3.0	3.75	5.625	7.5	11.25	15.0	22.5	30.0	45.0	90.0	360.0
1"=20'	0.4	0.5	0.667	1.0	2.0	2.5	3.75	5.0	7.5	10.0	15.0	20.0	30.0	60.0	240.0
1"=10'	0.2	0.25	0.333	0.5	1.0	1.25	1.875	2.5	3.75	5.0	7.5	10.0	15.0	30.0	120.0
1/8"=1'	0.16	0.2	0.267	0.4	0.8	1.0	1.5	2.0	3.0	4.0	6.0	8.0	12.0	24.0	96.0
3/16"=1'	0.1067	0.1333	0.1778	0.2667	0.5333	0.6667	1.0	1.33	2.0	2.67	4.0	5.33	8.0	16.0	64.0
1/4"=1'	0.08	0.1	0.1333	0.2	0.4	0.5	0.75	1.0	1.5	2.0	3.0	4.0	6.0	12.0	48.0
3/8"=1'	0.0533	0.0667	0.0889	0.1333	0.2667	0.333	0.5	0.6667	1.0	0.0417	2.0	2.667	4.0	8.0	32.0
1/2"=1'	0.04	0.05	0.0667	0.1	0.2	0.25	0.375	0.5	0.75	1.0	1.5	2.0	3.0	6.0	24.0
3/4"=1'	0.0267	0.0333	0.0444	0.0667	0.1333	0.1667	0.25	0.3333	0.5	0.6667	1.0	1.3	2.0	4.0	16.0
1"=1'	0.02	0.025	0.033	0.05	0.1	0.125	0.1875	0.25	0.375	0.5	0.75	1.0	1.5	3.0	12.0
1.5"=1'	0.0133	0.0167	0.0222	0.0333	0.0667	0.0833	0.125	0.1667	0.25	0.3333	0.5	0.6667	1.0	2.0	8.0
3"=1'	0.0067	0.0083	0.0111	0.0167	0.0333	0.0417	0.0625	0.0833	0.125	0.1667	0.25	0.3333	0.5	1.0	4.0
1"=1"	0.0017	0.0021	0.0028	0.0042	0.0083	0.0104	0.0156	0.0208	0.0313	0.0417	0.0625	0.0833	0.125	0.25	1.0

	DRAWING HEIGHT CONVERSION CHART - PLOTTED IN. = DRAWING FT.													
DWG SCALE	1"=50'	1"=40'	1"=30'	1"=20'	1"=10'	1/8"=1'	3/16"=1'	1/4"=1'	3/8"=1'	1/2"=1'	3/4"=1'	1"=1'	1.5"=1'	3"=1'
ELEMENT HGT														
1/16" Ft:	3.125	2.5	1.875	1.25	0.625	0.5	0.333333	0.25	0.166667	0.125	0.083333	0.0625	0.09375	0.1875
In:	37.5	30	22.5	15	7.5	6	4	3	2	1.5	1	0.75	1.125	2.25
1/8" Ft:	6.25	5	3.75	2.5	1.25	1	0.666667	0.5	0.333333	0.25	0.166667	0.125	0.1875	0.375
In:	75	60	45	30	15	12	8	6	4	3	2	1.5	2.25	4.5
3/16" Ft:	9.375	7.5	5.625	3.75	1.875	1.5	1	0.75	0.5	0.375	0.25	0.1875	0.28125	0.5625
In:	112.5	90	67.5	45	22.5	18	12	9	6	4.5	3	2.25	3.375	6.75
1/4" Ft:	12.5	10	7.5	5	2.5	2	1.333333	1	0.666667	0.5	0.333333	0.25	0.375	0.75

	In:	150	120	90	60	30	24	16	12	8	6	4	3	4.5	9
3/8"	**Ft:**	18.75	15	11.25	7.5	3.75	3	2	1.5	1	0.75	0.5	0.375	0.5625	1.125
	In:	225	180	135	90	45	36	24	18	12	9	6	4.5	6.75	13.5
1/2"	**Ft:**	25	20	15	10	5	4	2.666667	2	1.333333	1	0.666667	0.5	0.75	1.5
	In:	300	240	180	120	60	48	32	24	16	12	8	6	9	18
3/4"	**Ft:**	37.5	30	22.5	15	7.5	6	4	3	2	1.5	1	0.75	1.125	2.25
	In:	450	360	270	180	90	72	48	36	24	18	12	9	13.5	27
1"	**Ft:**	50	40	30	20	10	8	5.333333	4	2.666667	2	1.333333	1	1.5	3
	In:	600	480	360	240	120	96	64	48	32	24	16	12	18	36

Attachment "A"

City of Tucson / Architecture and Engineering

Confirmation of Receipt

I have received a copy of the City of Tucson / Architecture and Engineering AutoCAD standard and guidelines dated mm/dd/yyyy and understand as an architectural / engineering consulting firm working for and/or contracted with the City of Tucson / Architecture and Engineering Division that I/we must abide by these policies.

_____ _____

Signature of Receiver representing the A & E firm Date

_____

A & E firm name and address

PLEASE RETURN THIS FORM TO:

AE-Archivist@tucsonaz.gov
Joseph D. Varelas
4004 S. Park Ave., Bldg. 2
Tucson, AZ. 85714
(520) 837-6375
joseph.varelas@tucsonaz.gov

TABLE OF CONTENTS

I. INTRODUCTION

II. SECTION 010000 GENERAL REQUIREMENTS

III. SECTION 012300 ADD ALTERNATES:

IV. SECTION 018634 FACILITY SERVICES PERFORMANCE REQUIREMENTS ENERGY AND WATER EFFICIENCY

V. SECTION 013500 SPECIAL PROCEDURES

I. INTRODUCTION

This Division defines design and construction requirements particular to the City of Tucson and its various Departments. This Division of the Design and Construction Standards does not replace requirements of applicable federal, state, county statutes and/or City of Tucson codes and ordinances. This Division as well as the entire Design and Construction Standards are supplementary requirements, but are mandatory requirements just as existing statutes, codes, and ordinances when preparing the project documents and constructing the facility.

II. SECTION 010000 GENERAL REQUIREMENTS

All City shops and appropriate City Departments must review, check, and respond to plans and specifications as early as possible in the design phase. The A&E project manager will thoroughly review all submitted plans and distribute them for review by the other appropriate City Departments and the City shop personnel. Depending on the size of the project, the City Project Manager will schedule half day design reviews at the end of Schematic Design, Design Development, and 95% Construction Documents. (See the Project Management Manual for further details.). Each comment provided by the City of Tucson shall be responded to by the consultant. The City Project Manager shall ensure that each comment is addressed and in the case of conflicts shall be responsible for their resolution.

Building demolition: With the exception of the Community Services Division, all City of Tucson demolition activities shall, in every instance, be coordinated through Development Services Department. All City and County permits must be obtained.

Designer must keep ease of maintenance and access in mind throughout review.

The City Project Manager is responsible for ensuring that an Archeological/Cultural Resource Assessment Report is prepared prior to any digging on any construction site, this includes digging for exploratory information or subsurface core samples.

Ensure there are provisions to protect existing facilities and new construction.

Check specific Department standards for Police, Fire, Parks and Recreation, and others.

All Police and City Court projects will require background checks for all A/E, A/E consultants and construction workers.

All Police and Fire projects will require that the drawings be secured:

SD & DD – Note on all the drawings sheets; "CONFIDENTIAL – DO NOT COPY - NOT FOR DISTRIBUTION".

CD & PERMIT SET– Note on all the drawing sheets; "CONFIDENTIAL – NOT FOR PUBLIC VIEWING".

Ask the DSD reviewer to place a "NOTICE" in the system.

Test the system:

Check the DSD web site for:

Post permit
Mid-construction
Post construction rev5/2/08

Walkway canopies, railings, and similar work shall be designed to not allow possible access by vandals, burglars, etc. to secure areas and rooftops. Consideration should be given to using materials that reduce vandalism and graffiti.

Survey drawings must show existing utilities.

All consultants shall look up, on the City of Tucson Development Services website, all the latest applicable codes prior to starting the design of a new City project.

Design Consultants and Job Order Contractors with design projects shall be provided a set of City Standards at the beginning of each project.

Consideration should be given to the use of recycled products, as well as having a construction site recycling program.

Plans should include provisions for sheltered exterior areas for smokers, away from pedestrian traffic and at least 20 feet from a building entrance and mechanical air intake equipment.

2-year material and construction warranties are required on all construction projects, commencing on the date of substantial completion. This excludes specific warranties for roofing (20 years) and other materials and equipment with specific warranties greater than two years.

Provide to the City six sets of shop drawings and/or submittals as required.

The City of Tucson Fire Department must be contacted early in design if the facility is expected to use or store hazardous materials or other hazardous waste. Ensure that these storage locations meet the City of Tucson Fire Department requirements for storage and personal protection (eye wash/ emergency showers, etc.) and are secure with the proper fencing, canopies, and separation.

All rules and regulations governing dust control will be strictly enforced.

Acceptable Products - Specifications will list a minimum of three acceptable products in order to allow for competition. The Project Manager and Design Consultant will work with Procurement to justify any products with less than three acceptable products. The City prefers not to include an 'or equal' statement for most products. Contract provisions allow for pre-approved substitutions to be submitted during the bidding period. The design consultant should clearly indicate in their specifications that substitutions will not be allowed after the bids have been accepted. The design consultant and project manager will determine where 'or equal' products will be allowed before the specifications are finalized.

Record Documents – The contractor is required to maintain at the project jobsite a set of record documents that are 'redlined' to indicate changes to the work. The design consultant and Project Coordinator will verify during site inspection that the record documents are in fact being 'redlined'. At the end of the project the contractor will submit to the design consultant for review the 'redlined' documents. The design consultant will then update the project document files to reflect the 'as-built' conditions and turn the files and 'redlined' documents over to the project coordinator (or Project manager) at the end of the project.

Temporary Utilities – contractor to provide and pay for utilities required for the project unless special arrangements are made with the City.

Operations and Maintenance Manuals – The contractor shall provide 6 sets of O&Ms in hardcopy as well as one set in electronic format. Of the submitted copies, one hardcopy copy to the City Project Coordinator and the rest to the design consultant for review. The O&Ms shall be indexed and tabulated by division. Once approved, a hardcopy and softcopy will be submitted to City Facility Management's Planner. Copies shall also be archived by the A/E Division.

Generally, irrigation sprinkler heads shall be located 10 feet away from fence and building lines. Turf growth along fence and building lines should be discouraged. Areas of turf should be limited, abandoned areas shall be blocked out.

Consultants are expected to review and comment on RFIs, shop drawings and supplemental instructions within 5 days. The City Project Manager is expected to review these same items concurrently.

The following contaminates are not allowed in any construction materials for use in any new construction for the City of Tucson:

a. Asbestos
b. Contaminated Soils
c. Lead
d. Polychloride Biphenyl (PCB)
e. Mold

III. SECTION 012300 ADD ALTERNATES:

Make sure "Alternate" work numbers agree in both plans and specifications.

Always list Add Alternate in order of highest priorities first.

IV. SECTION 018634 FACILITY SERVICES PERFORMANCE REQUIREMENTS -ENERGY AND WATER EFFICIENCY:

General - The facilities designed under this Contract shall be designed for maximum efficiency in the use of both energy and water. On April 18, 2006, the City of Tucson Mayor and Council adopted LEED Silver as the minimum requirement for new construction. In addition the resolution requires a minimum of 7 points for new construction (9 points for existing buildings) combined from EA1 (Optimize Energy Performance) and EA2 (Renewable Energy) credits, and the design must demonstrate that 5% of the total annual lighting, mechanical system and

domestic water heating energy consumption is offset by the use of solar energy. Documentation shall be provided by using the U.S. Green Building LEED templates. A copy of the latest version of the project checklist may be downloaded from the U.S. Green Building web site, and shall be used by the design team and the construction team to validate compliance with LEED Silver standards; LEED NC (New Construction) for new facilities; LEED EB (Existing Building) for major reconstruction and remodeling; and LEED CI (Commercial Interiors).

The Consultant shall provide written technical analysis of energy conservation measures at each phase of the project. Energy saving strategies should be devices which are built in the project and cannot be easily defeated.

The City expects a 30 year life for its buildings. Building shell materials and wise use of glass are preferred strategies. NOTE -Day lighting is only beneficial if lighting controls are used.

Construction and Commissioning:
The City will gain the 'Enhanced Commissioning Credit under the LEED Program. This requires the City Project Manager to hire a third party commissioning Agent (CA) – The City PM is responsible for ensuring the commissioning agent has been contracted and has reviewed the project basis of design and design documents and will schedule regular site visits during construction per the latest version of LEED. The design consultant is required to include the CA's review of the basis of design, all comments during design, preliminary commissioning plans and preliminary commissioning specifications in the final report. The CA will review and comment to the design consultant on the final report. All systems to be commissioned will be identified and noted by the design consultant. The CA will make periodic site visits and reports during construction. The final phase of construction will be the actual commissioning of each energy and control system identified in all the reports and will be commissioned by the Third Party Commissioning Agent and certified as operational.

Lighting:
Provide the optimum solar orientation of the building's windows to best use day lighting or passive heating and an efficient configuration of interior spaces to maximize use of day lighting.

Provide motion and light sensors for all spaces including conference and rest rooms.

Provide high efficiency sky lighting in interior rooms.

Provide high efficiency lighting.