EL SUR RESTAURANT
SITE DEVELOPMENT PACKAGE
DP18-0037

5602 EAST 22ND STREET
TUCSON, ARIZONA 85711

GENERAL NOTES:

A. ZONING AND LAND USE

1. EXISTING ZONING IS C-1 LOCAL COMMERCIAL - A RESTRICTIVE COMMERCIAL ZONE, LIMITED TO RETAIL SALES WITH NO OUTSIDE DISPLAY/STORAGE. OFFICE AND RESIDENTIAL DEVELOPMENT PERMITTED. RESTAURANTS PERMITTED.

2. GROSS LOT AREA + EXPANSION:

EXISTING LOT	= 7,868 S.F.
ADDED LOT	= 7,563 S.F.
TOTAL LOT AREA	= 15,431 S.F.

LOT EXPANSION = 96%

3. THE ADMINISTRATIVE SITE ADDRESS IS 5602 E 22ND STREET.
4. ASSESSOR'S PARCEL NUMBER IS: 131-10-008A .
5. THIS PROJECT IS GOVERNED BY UDC 2013 SECTION 5.4, MAJOR STREETS AND ROUTES (MS&R) SETBACK ZONE.

B. DRAINAGE NOTES.

1. THE DEVELOPER, ANY SUCCESSORS AND ASSIGNS, WILL HOLD THE CITY OF TUCSON, ITS OFFICERS, EMPLOYEES, AND AGENTS HARMLESS FROM ANY AND ALL CLAIMS FOR DAMAGES RELATED TO THE USE OF THIS DEVELOPMENT AS SHOWN HEREON, NOW AND IN THE FUTURE, BY REASON OF FLOODING, FLOWAGE, EROSION, OR DAMAGE CAUSED BY WATER, WHETHER SURFACE FLOOD OR RAINFALL
2. DRAINAGE WILL REMAIN IN ITS NATURAL STATE AND WILL NOT BE ALTERED, DISTURBED, OR OBSTRUCTED.

C. STREETS AND ROADS NOTES.

1. NO STRUCTURE OR VEGETATION SHALL BE LOCATED OR MAINTAINED SO AS TO INTERFERE WITH THE SIGHT VISIBILITY TRIANGLES IN ACCORDANCE WITH DEVELOPMENT STANDARD 3-01.0. 2. TOTAL MILES OF NEW PUBLIC STREETS IS ZERO. 3. TOTAL MILES OF NEW PRIVATE STREETS IS ZERO.

D. UTILITY NOTES.

1. ANY RELOCATION OR MODIFICATION OF EXISTING UTILITIES AND/OR PUBLIC IMPROVEMENTS NECESSITATED BY THE PROPOSED DEVELOPMENT WILL BE AT NO EXPENSE TO THE PUBLIC.
2. ANY WASTEWATER DISCHARGED INTO THE PUBLIC SANITARY SEWERAGE SYSTEM SHALL MEET THE REQUIREMENTS OF PIMA COUNTY ORDINANCE NO. 1991-140, AS CURRENTLY AMENDED.

E. TRAILS NOTE.

1. THE EASTERN PIMA COUNTY TRAILS SYSTEM MASTER PLAN DOES NOT SHOW ANY TRAILS ON OR ADJACENT TO THE DEVELOPMENT SITE.

SITE NOTES:

1. THE EXISTING BUILDINGS AND STRUCTURES LOCATED ON THIS SITE WILL REMAIN. NO ADDITIONAL SCOPE OF WORK IS BEING PROPOSED.
2. THE FOLLOWING DEVELOPMENT CRITERIA APPLIES: CRITERIA EXISTING SITE AREA (S.F.) 0 15,358 BUILDING HEIGHT 75' MAX 12' & 11' PERIMETER YARDS ARE APPLICABLE TO THIS EXISTING DEVELOPMENT. THE SITE IS LOCATED IN AN ESTABLISHED AREA.
3. EXISTING AND PROPOSED USES IS: FOOD SERVICE SUBJECT TO UDC USE SPECIFIC STANDARDS 4.9.4.M.1 & .5, 4.9.13.O, ADMINISTRATIVE AND PROFESSIONAL OFFICE USE SUBJECT TO UDC USE SPECIFIC STANDARDS 4.9.13.O.
4. THIS USE IS SUBJECT TO SECTION 6-101 OUTDOOR LIGHTING CODE.
5. MOTOR VEHICLE AND BICYCLE REQUIREMENTS: MOTOR VEHICLE SPACE REQUIREMENTS: ONE (1) SPACE PER 100 S.F. GFA OF FOOD SERVICE. BICYCLE PARKING REQUIRED: 2 SHORT TERM, 2 LONG TERM.
6. LOADING ZONE REQUIREMENTS PER SECTION 7.5.5-A NO LOADING ZONE REQUIRED FOR THIS PROJECT.
7. NO ADDITIONAL SIGNAGE IS PROPOSED FOR THIS PROJECT.
8. AS SHOWN ON FIRM PANEL 2303 (EFFECTIVE DATE JUNE 16, 2011) THE SITE IS WITHIN AN UN-SHADED ZONE X (AREAS TO BE OUTSIDE THE 500 YEAR FLOOD PLAIN).
9. THE GOVERNING ACCESSIBILITY CODE IS 2012 IBC CHAPTER 11 AND ICC 117.1 FOR PRIVATE PROPERTY.
10. BASED ON THE 2012 IBC THE OCCUPANCY CLASSIFICATION FOR THE EXISTING BUILDINGS ON THIS SITE IS BUSINESS GROUP B. THE CONSTRUCTION TYPE IS TYPE V-B.
11. THIS DEVELOPMENT IS SUBJECT TO EASEMENTS, COVENANTS, CONDITIONS, AND RESTRICTIONS AS RECORDED IN DOCKET 11254 AT PAGE 2386.
12. THE TOPOGRAPHIC INFORMATION FOR THIS PROJECT WAS OBTAINED FROM A SURVEY PREPARED AND SEALED BY ROBIN E. SETTLEMEYER (RLS #26932), AND DATED JULY 2, 2017. THE PARCEL GEOMETRIC AND EASEMENT DATA FOR THIS PROJECT WAS OBTAINED FROM THE SAME LAND SURVEY REFERENCE.
13. THIS DEVELOPMENT PLAN, WHEN APPROVED, SHALL SERVE AS THE TYPE 2 GRADING PERMIT FOR THIS PROJECT.
14. THERE ARE NO NEW SITE SANITARY SEWERS PROPOSED FOR THIS PROJECT.
15. ALL MATERIALS AND WORKMANSHIP ARE TO BE IN ACCORDANCE WITH PIMA COUNTY/CITY OF TUCSON STANDARD SPECIFICATIONS FOR PUBLIC IMPROVEMENTS (PC/COT SSPI), EDITION OF 2003, EXCEPT AS MODIFIED HEREBY.
16. ALL CONSTRUCTION AND TESTING METHODS SHALL BE IN CONFORMANCE WITH PC/COT SSPI, EDITION OF 2003, EXCEPT AS MODIFIED HEREBY.
17. A STAMPED SET OF APPROVED PLANS SHALL BE KEPT IN AN EASILY ACCESSIBLE LOCATION ON THE JOBSITE AT ALL TIMES OR DURING CONSTRUCTION.
18. CONTRACTOR SHALL COMPLY WITH ALL APPLICABLE OCCUPATIONAL SAFETY AND HEALTH ADMINISTRATION REGULATIONS.
19. CONTRACTOR SHALL CALL BLUE STAKE (1-800-782-5348) TO VERIFY LOCATION OF ALL UTILITIES PRIOR TO COMMENCEMENT OF CONSTRUCTION.
20. CONTRACTOR SHALL OBTAIN ALL PERMITS REQUIRED BY GOVERNMENTAL AGENCIES.
21. UPON COMMENCEMENT OF WORK, TRAFFIC CONTROL DEVICES SHALL BE POSTED AND MAINTAINED BY THE CONTRACTOR UNTIL SUCH TIME AS THE WORK IS COMPLETED. ALL WARNING SIGNS, BARRICADES, ETC., SHALL BE IN ACCORDANCE WITH THE MANUAL OF UNIFORM TRAFFIC CONTROL DEVICES ADOPTED BY THE STATE OF ARIZONA PURSUANT TO A.R.S 28-650.
22. THE CONTRACTOR SHALL BE RESPONSIBLE FOR THE CARE AND MAINTENANCE OF EXISTING IMPROVEMENTS AND VEGETATION IN THE WORK AREA. PAVEMENT, CURBS, CART PATHS AND ANY OTHER OBSTRUCTIONS DAMAGED DURING CONSTRUCTION ARE TO BE REPLACED BY THE CONTRACTOR. ANY UNDERGROUND PIPES, IRRIGATION LINES, IRRIGATION CONTROLS, DRAINS, STRUCTURES, OR OBSTRUCTIONS NOT SHOWN ON THESE PLANS SHALL BE MOVED, ALTERED, OR REPAIRED BY THE CONTRACTOR WHEN ENCOUNTERED, AS DIRECTED BY THE ENGINEER, AND IS A DEFINITE PART OF THIS PROJECT.
23. IT SHALL BE THE RESPONSIBILITY OF THE CONTRACTOR AND/OR THE SURVEYOR PROVIDING THE CONSTRUCTION LAYOUT TO VERIFY THE BENCHMARK AND COMPARE THE SITE CONDITIONS WITH THE PLANS AND SHALL NOTIFY THE ENGINEER OF ANY DISCREPANCIES OBSERVED. SHOULD ANY BENCHMARK, GRADE OR DESIGN INDICATED ON THE PLANS BE SUSPECT, THE ENGINEER SHALL BE NOTIFIED OF SAID BENCHMARK, GRADE OR DESIGN PROBLEM AT LEAST TWENTY-FOUR HOURS BEFORE CONSTRUCTION IS SCHEDULED TO BEGIN ON THE AFFECTED AREA.

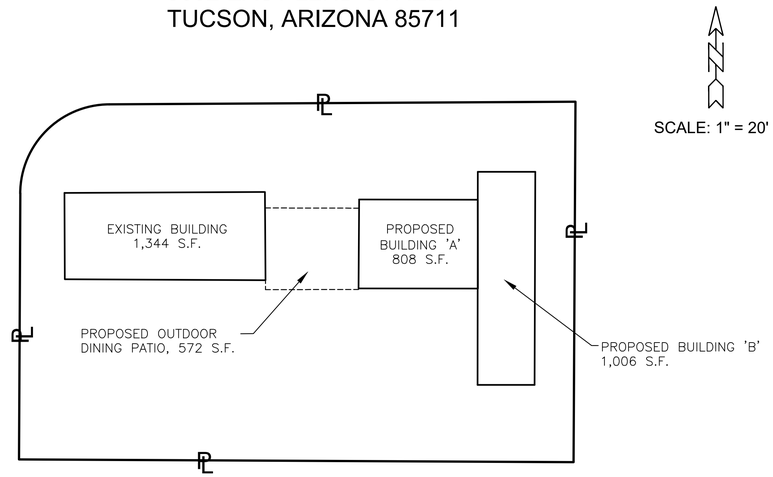

SCALE: 1" = 20'

LOCATION MAP:

SEC. 24, T-14-S,
R-14-E
G. & S.R.B. & M.

1" = 3 MILES

LEGEND:

- PROPERTY LINE
- EXISTING STREET LIGHT
- TRAFFIC FLOW ARROW
- EXISTING ASPHALT PAVING
- EXISTING PEDESTRIAN TILED ACCESS
- STEEL FENCE
- WM EXISTING WATER METER
- EXISTING FIRE HYDRANT
- EXISTING WATER VALVE
- OHE EXISTING OVERHEAD ELECTRIC
- P EXISTING POWER POLE
- G EXISTING 2" GAS
- SLOPE DIRECTION

PARKING CALCULATIONS:

USE: FOOD SERVICE AND OFFICE

PARKING CALCULATIONS FOOD SERVICE:
1 SPACE PER 100 S.F. 2,724/100 = 27 REQUIRED

PARKING CALCULATIONS OFFICE:
1 SPACE PER 300 S.F. 1,006/300 = 3 REQUIRED

HANDICAP SPACES REQUIRED = 2 REQUIRED
= 3 PROVIDED (1 VAN ACCESSIBLE)

BICYCLE PARKING:
SHORT TERM SPACES = 4 REQUIRED
= 4 PROVIDED
LONG TERM SPACES = 4 REQUIRED
= 10 PROVIDED (6 EXTRA)

PARKING REDUCTIONS
EXTRA BICYCLE PARKING PROVIDED
6 LONG TERM SPACES = 1 SPACE REDUCTION
EXTRA H.C. SPACE PROVIDED = 2 SPACE REDUCTION

TOTAL PARKING REQUIRED WITH REDUCTIONS = 27 SPACES
TOTAL PARKING SPACES PROVIDED = 27 SPACES

VARIANCES REQUIRED:

A) NONCOMPLIANCE OF PARKING DESIGN ON NORTH SIDE OF PROPERTY REQUIRING CARS TO BACK INTO FRONTAGE ROAD.
B) PEDESTRIAN ACCESS FROM TWO SPACES AT NORTH SIDE PARKING ON EAST END NOT POSSIBLE.
C) LANDSCAPE BUFFER AT NORTH AND WEST SIDES OF PROPERTIES NOT POSSIBLE DUE TO EXISTING CONDITIONS.
D) CANOPY TREES AT EXISTING PARKING AREAS ON NORTH AND SOUTH SIDES OF PROPER, NOT POSSIBLE DUE TO EXISTING SPACE LIMITATIONS.
E) PEDESTRIAN ACCESS PATH FROM PARKING SPACES AT SOUTH SIDE OF PROPERTY BETWEEN BUILDING A' SOUTH ENTRANCE AND BUILDING 'B' ENTRANCE.
G) DIRECT ACCESS INTO PARKING PARKING SPACES FROM A MAJOR STREET.

TSMR REQUIREMENTS:

F) UNABLE TO PROVIDE 5' PEDESTRIAN SIDEWALK ALONG 22ND STREET.
G) MS&R SIDEWALKS NOT POSSIBLE DUE TO EXISTING CONDITIONS.

SITE NOTES:

1. TOTAL FLOOR AREA OF EXISTING BUILDINGS IS 1,344 S.F. GFA
2. EXISTING AND PROPOSED AREA & USES OF BUILDINGS ARE:

EXISTING BUILDING 'A'	=	1,344 S.F. GFA FOOD SERVICE	- Std. 4.9.4.M.1 & .5, 4.9.13.O
		TOTAL EXISTING: 1,344 S.F.	
ADD BUILDING 'B'	=	808 S.F. GFA FOOD SERVICE	- Std. 4.9.4.M.1 & .5, 4.9.13.O
ADD OUTDOOR DINING	=	572 S.F. GFA FOOD SERVICE	- Std. 4.9.4.M.1 & .5, 4.9.13.O
ADD BUILDING 'C'	=	1,006 S.F. GFA OFFICE	- Std. 4.9.13.O
		TOTAL ADDED: 2,386 S.F.	

3. BUILDING EXPANSION CALCULATIONS

EXISTING GFA	=	1,344 S.F.
ADDED GFA	=	2,386 S.F.
BUILDING EXPANSION	=	177.5%

4. THE EXISTING BUILDING WILL BE EXPANDED BY EXISTING BUILDING TO EAST. SEE ABOVE FOR BUILDING EXPANSION CALCULATION.

PROJECT PHASING:

THIS PROJECT WILL NOT BE PHASED.

AREA OF DISTURBANCE:

1,400 S.F. OR 0.061 ACRES

WASTE CALCULATION:

SEE SHEET S2 FOR WASTE STREAM CALCULATION.

CUT: 10 CY
FILL: 15 CY

SHEET INDEX

1 – S1 COVER SHEET
2 – S2 SITE LAYOUT
3 – S3 SITE DETAILS
4 – S4 LANDSCAPE PLAN
5 – S5 LANDSCAPE NOTES/DETAILS

CERTIFICATE NO. 6380 STEVEN M. CORRALES, JR. Date Signed 2-26-19

EXPIRES 6/30/20

SCE@SWCONSULTINGCE.COM

PROJECT OWNER
BOUCK JERRY F &
SHARON J CP/RS
7501 N. CAMINO DE OESTE
TUCSON, AZ. 85741

SOUTHWEST CONSULTING ENGINEERING
STEVEN M CORRALES, JR, PE, RLS
CONSULTING ENGINEERS / LAND SURVEYORS / LAND PLANNERS
2510 W. CALLE MORADO TUCSON, AZ 85745
(520) 241-2621
sce@swconsultingce.com

CITY OF TUCSON — DEVELOPMENT PACKAGE PDSD APPROVAL

☐ Site/Dev Plan	☐ SCZ
☐ Tentative Plat	☐ FRZ
☐ Grading	☐ HDZ
☐ SWPPP	☐ WASH
☐ FUP	☐ Other

DVPKG MGR _____ Date _____
Zoning _____ Date _____
Engineering _____ Date _____
H/C Site _____ Date _____
Fire _____ Date _____
Landscape _____ Date _____
PL/ME _____ Date _____
Revision # _____ ☐ per letter in SIRE

DP18-0037
5602 EAST 22ND STREET

DEVELOPEMNT PACKAGE
EL SUR RESTAURANT
-
LOTS 7 AND 8, BLOCK 1 OF NORTH GATE,
BOOK 10, M.&P., PAGE 3 - Sec 24, T 14S, R 14E

COVER SHEET		S1
DESIGNED BY: CPC	DATE: SEPT-19	SHEET 1 of 5
DRAWN BY: CPC		
CHECKED BY: SMC		SCALE: 1"=20'

SCALE: 1" = 10'

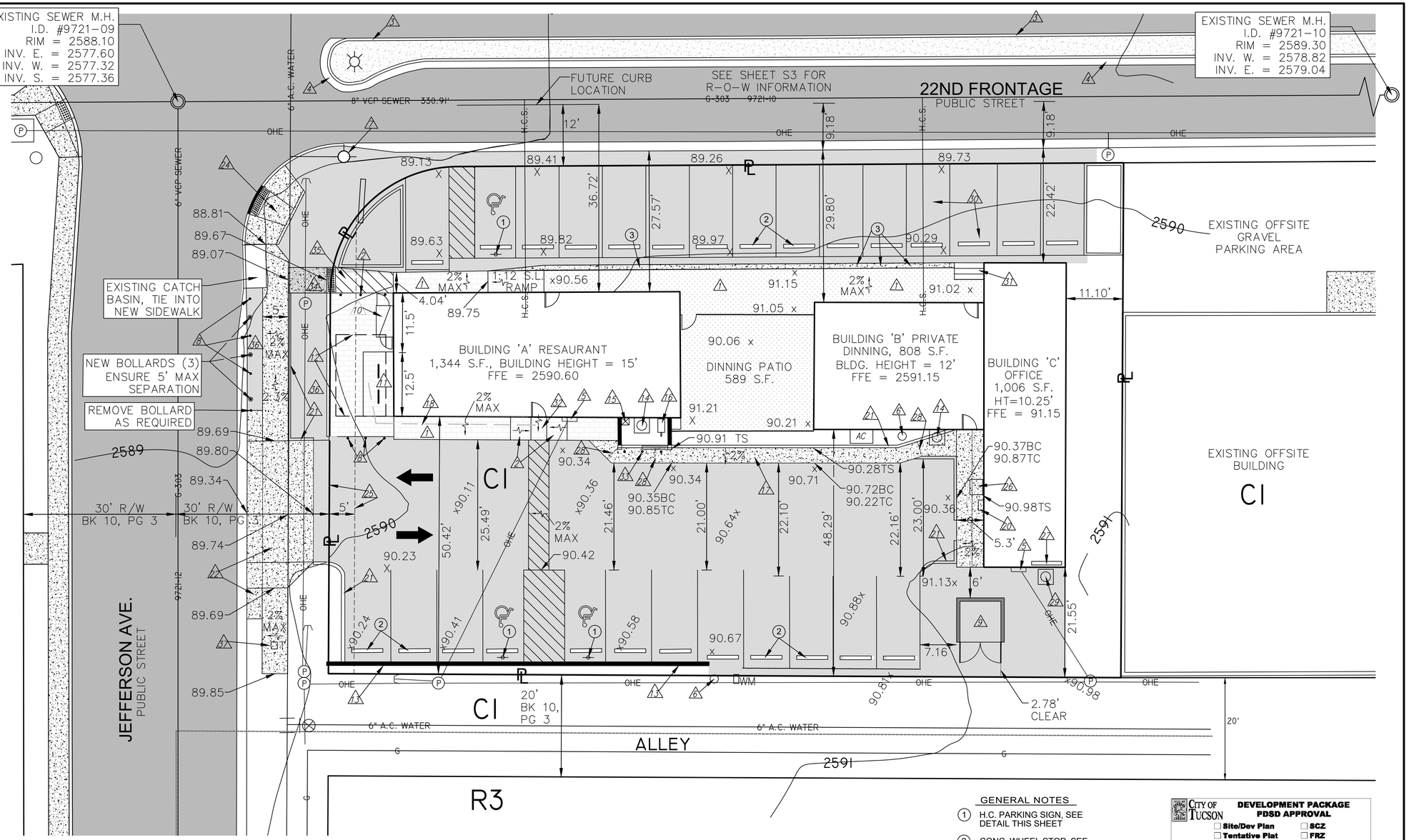

NOTES

1. EXISTING PEDESTRIAN ACCESS SIDEWALK
2. REMOVE EXISTING BOLLARDS
3. EXISTING CURBED TRAFFIC MEDIAN
4. EXISTING CURB AND GUTTERED TRAFFIC MEDIAN
5. EXISTING ELECTRIC SERVICE ENTRANCE ENSURE 25' HEIGHT WIRE CLEARANCE OVER TRASH AREA
6. EXISTING GAS METER
7. EXISTING FIRE HYDRANT
8. EXISTING CONC. BOLLARDS
9. PROPOSED GARBAGE DUMPSTER AND ENCLOSURE, SEE DETAIL SHEET S3
10. LONG TERM BICYCLE PARKING SEE DETAIL SHEET S3
11. SHORT TERM BICYCLE PARKING SEE DETAIL SHEET S3
12. EXISTING 10' x 16' STORAGE BUILDING, TO BE REMOVED
13. EXISTING 4' CMU WALL TO REMAIN
14. EXISTING WATER HEATER AND CABINET TO BE RELOCATED TO SOUTHERN BUILDING C AREA, NOTE 29
15. EXISTING MOP SINK
16. EXISTING GREASE TRAP
17. NEW 3' CONC. PEDESTRIAN ACCESS W/ 2% MAX HORIZONTAL SLOPE
18. 47' DISTANCE FROM SHORT TERM BIKE TO PUBLIC ENTRANCE
19. RELOCATE TELEPHONE BOX AS REQUIRED
20. REMOVE AIR CONDITIONER FROM PEDESTRIAN ACCESS AREA
21. NEW 6" CONC. VERTICAL CURB, TYPE 2 PER PAG STD. 209
22. NEW CONC. ACCESS APRON PER PAG STD. 206
23. NEW 4' WIDE x 7.56' PEDESTRIAN ACCESS.
24. NEW CURB ACCESS RAMP, PER PAG STD. 207, SHEET 1 OF 10
25. 5' ELECTRIC UTILITY EASEMENT, BOOK 10, PAGE 3 OF MAPS AND PLATS
26. REMOVE A.C. UNIT AND REPLACE ON ROOF
27. 3-LONG TERM BICYCLE PARKING RACKS, SEE DETAILS SHEET S3.
28. 3' MINIMUM CLEARANCE
29. NEW WATER HEATER LOCATION
30. REPLACE EXISTING HANDICAP PARKING AND ACCESS AISLE WITH STANDARD PARKING SPACES
31. REPLACE EXISTING RAMP W/ 3 - 4" x 1'-1" RISERS
32. 3' WIDE ACCESS @ 12:1 MAX SLOPE
33. REMOVE 3-BOLLARDS AND REQUIRED PORTION OF CMU WALL TO REPLACE WITH CURB AND 3' WIDE ACCESS
34. NEW 5' x 7.56' CONCRETE ACCESS @ 0.8% SLOPE
35. STRIPED ACCESS, ENSURE ADA SLOPE COMPLIANCES
36. REMOVE EXISTING A.C. AND REPLACE WITH D.G.
37. RELOCATE EXISTING TELEPHONE BOX AS REQUIRED

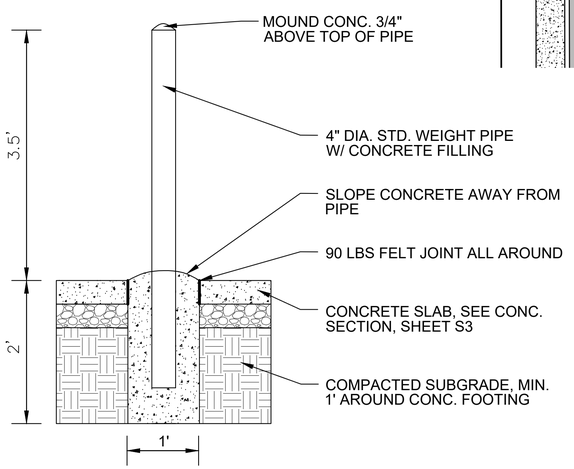

CONCRETE BOLLARD

TYPICAL SECTION (NTS)

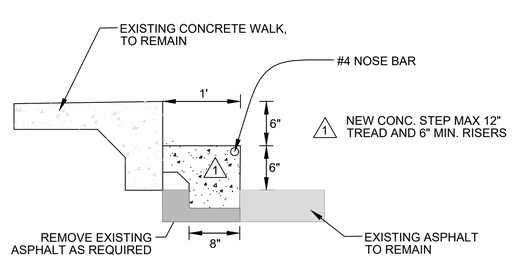

NEW CONCRETE STEP

SECTION (NTS)

ANNUAL WASTE CALCULATION:

USE:	= FOOD SERVICES
BUILDING S.F.	= 2,741 S.F. x .0057 T. = 15.6237 TONS
15.6237/52	= 0.300456 TONS / WEEK
0.300456 x 2000 LBS	= 600.912 LBS / WEEK
600.912 / 3 LBS/GAL	= 200.304 GAL. / WEEK
USE:	= OFFICE SERVICES
BUILDING S.F.	= 1,006 S.F. x .0013 T. = 1.3078 TONS
1.3078/52	= 0.02515 TONS / WEEK
0.02515 x 2000 LBS	= 50.3 LBS / WEEK
50.3 / 3 LBS/GAL	= 16.766 GAL. / WEEK
TOTAL	= 217.07 GA. / WEEK

1 – 2 CUBIC YARD METAL CONTAINER TO BE USED.

NOTE: 2 C.Y. CONTAINER
= (2 C.Y./WK) x (202 GAL./C.Y.) = 404 GAL/WEEK

GENERAL NOTES

1. H.C. PARKING SIGN, SEE DETAIL THIS SHEET
2. CONC. WHEEL STOP, SEE DETAIL THIS SHEET
3. NEW CONC. STEP, SEE DETAIL THIS SHEET

BC = BOTTOM CURB ELEVATION
TC = TOP CURB ELEVATION
TS = TOP SIDEWALK ELEVATION

EXPIRES 6/30/20
SCE@SWCONSULTINGCE.COM

SOUTHWEST CONSULTING ENGINEERING
STEVEN M CORRALES, JR, PE, RLS
CONSULTING ENGINEERS / LAND SURVEYORS / LAND PLANNERS
2510 W. CALLE MORADO TUCSON, AZ 85745
(520) 241-2621
sce@swconsultingce.com

CITY OF TUCSON
DEVELOPMENT PACKAGE
PDSD APPROVAL

- ☐ Site/Dev Plan ☐ SCZ
- ☐ Tentative Plat ☐ FRZ
- ☐ Grading ☐ HDZ
- ☐ SWPPP ☐ WASH
- ☐ FUP ☐ Other

DVPKG MGR ____ Date ____
Zoning ____ Date ____
Engineering ____ Date ____
H/C Site ____ Date ____
Fire ____ Date ____
Landscape ____ Date ____
PL/ME ____ Date ____
Revision # ____ ☐ per letter in SIRE

DP18-0037
5602 EAST 22ND STREET

DEVELOPEMNT PACKAGE
EL SUR RESTAURANT

LOTS 7 AND 8, BLOCK 1 OF NORTH GATE, BOOK 10, M.&P., PAGE 3 - Sec 24, T 14S, R 14E

SITE LAYOUT		S2
DESIGNED BY: CPC	DATE: SEPT-19	SHEET 2 of 5
DRAWN BY: CPC		
CHECKED BY: SMC		SCALE: 1"=10'

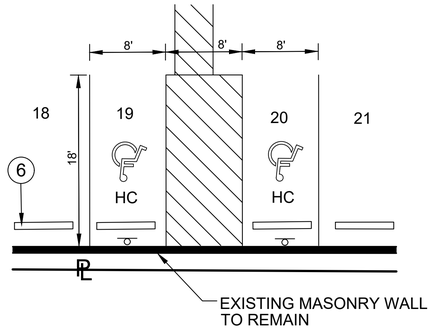

SPACES 19 & 20 - VAN ACCESSIBLE HC

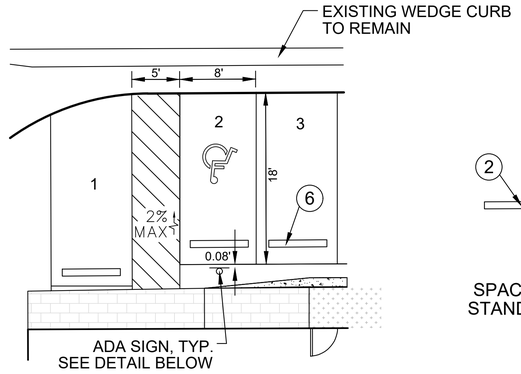

SPACE 2 - ADA PARKING SPACE

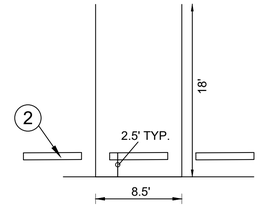

SPACES 4 - 11, 13 & 14, 15-17
STANDARD PARKING SPACES

SCALE: 1" = 20'

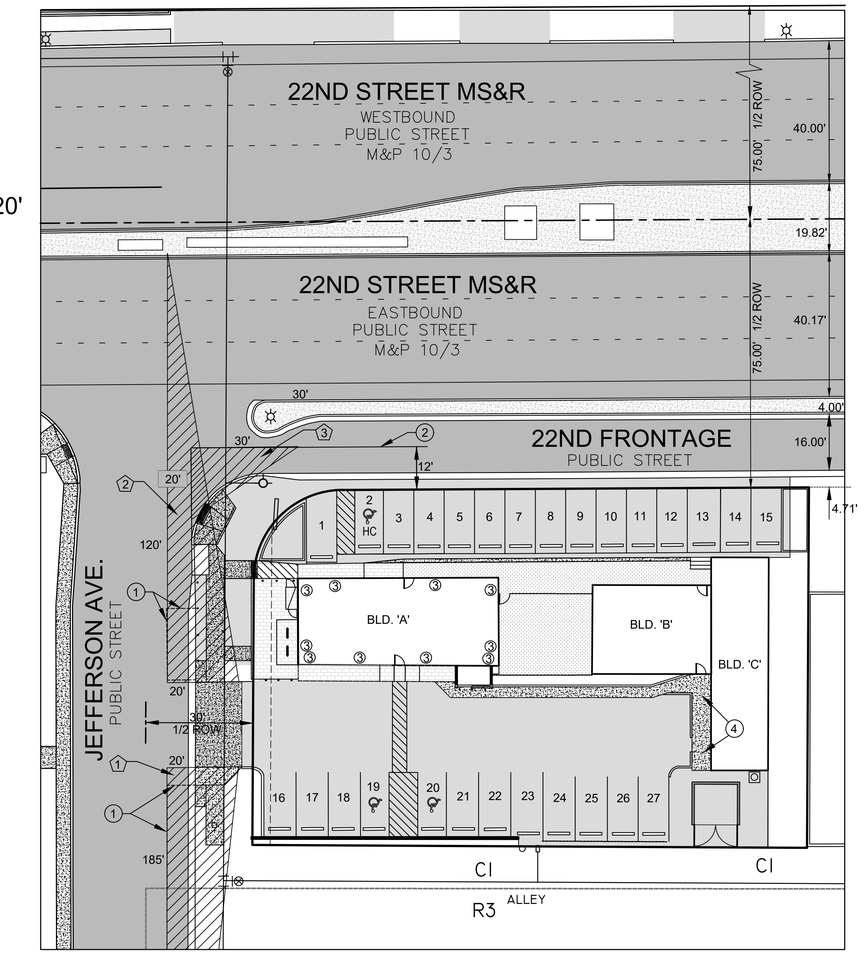

SITE VISIBILITY TRIANGLES:

EXISTING SITE VISIBILITY TRIANGLE PER CITY OF TUCSON STANDARDS, TECHNICAL STANDARDS MANUAL 10-01.5.0.

1. NEAR SIDE TRIANGLE = 20' x 185'
2. FAR SIDE TRIANGLE = 20' x 120'
3. PEDESTRIAN TRIANGLE = 20' x 30'

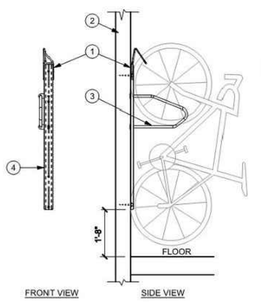

KEYNOTES THIS DETAIL:

1. VERTICAL MOUNT BIKE RACK PER MANUFACTURER MANUFACTURER: BIKE FIXATION BY SARIS MODEL NUMBER: 6006 COLOR: BLACK
2. STANDARD STUD OR CONCRETE WALL
3. 3/4" SOLID STEEL LOCKING LOOP
4. MOUNT MULTIPLE RACKS AT 1'-6" SPACING

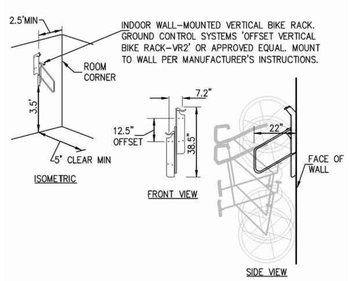

LONG TERM BICYCLE PARKING

3 RACKS FOR 6 BICYCLE SPACES
SEE LONG TERM LOCATION DETAIL BELOW
NTS

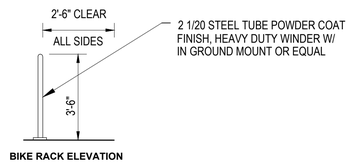

BIKE RACK ELEVATION

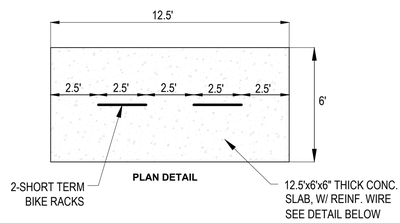

PLAN DETAIL

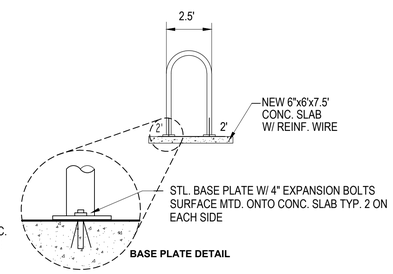

BASE PLATE DETAIL

SHORT TERM BICYCLE PARKING

SEE SHEET S2 FOR LOCATION
NTS

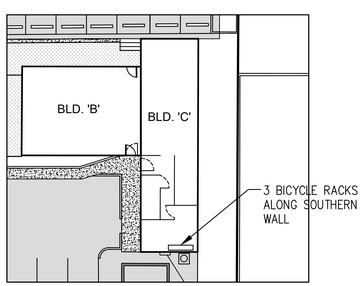

LONG TERM BICYCLE LOCATION

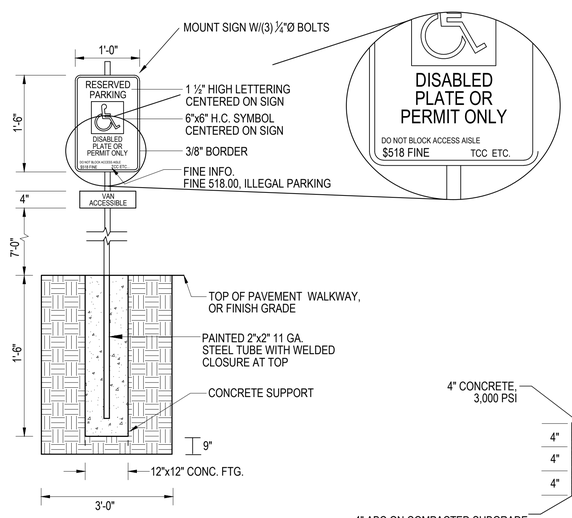

HANDICAP SIGN DETAIL

2 - EACH

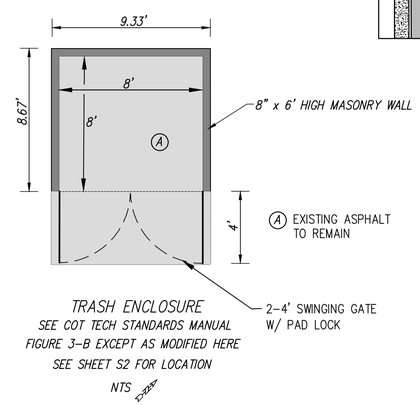

TRASH ENCLOSURE
SEE COT TECH STANDARDS MANUAL
FIGURE 3-B EXCEPT AS MODIFIED HERE
SEE SHEET S2 FOR LOCATION
NTS

GENERAL NOTES

1. 8' WIDE PARALLEL PARKING
2. MS&R FUTURE CURB LOCATION
3. 4" x 4" SQUARE ROOF DRAIN
4. NEW 27' x 6' ROOF OVERHANG
5. TRASH BIN LOCATION

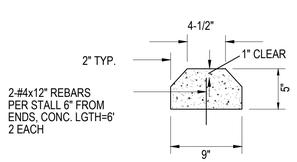

CONCRETE WHEEL STOP

TYPICAL SECTION (NTS)

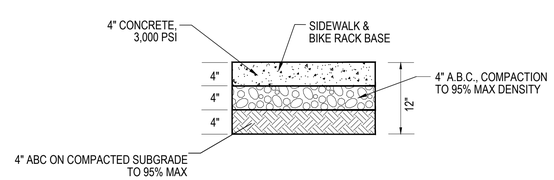

CONCRETE SECTION

SECTION (NTS)

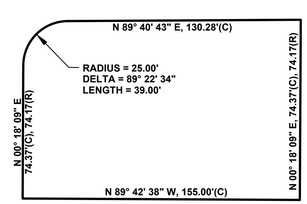

BOUNDARY INFORMATION

SECTION (NTS)

CITY OF TUCSON — DEVELOPMENT PACKAGE PDSD APPROVAL

☐ Site/Dev Plan	☐ SCZ
☐ Tentative Plat	☐ FRZ
☐ Grading	☐ HDZ
☐ SWPPP	☐ WASH
☐ FUP	☐ Other

DVPKG MGR _____ Date _____
Zoning _____ Date _____
Engineering _____ Date _____
H/C Site _____ Date _____
Fire _____ Date _____
Landscape _____ Date _____
PL/ME _____ Date _____
Revision # _____ ☐ per letter in SIRE

EXPIRES 6/30/20
SCE@SWCONSULTINGCE.COM

SOUTHWEST CONSULTING ENGINEERING
STEVEN M CORRALES, JR, PE, RLS
CONSULTING ENGINEERS / LAND SURVEYORS / LAND PLANNERS
2510 W. CALLE MORADO TUCSON, AZ 85745
(520) 241-2621
sce@swconsultingce.com

DP18-0037
5602 EAST 22ND STREET

DEVELOPEMNT PACKAGE
EL SUR RESTAURANT

LOTS 7 AND 8, BLOCK 1 OF NORTH GATE, BOOK 10, M.&P., PAGE 3 - Sec 24, T 14S, R 14E

SITE DETAILS		S3
DESIGNED BY: CPC	DATE:	SHEET 3 of 5
DRAWN BY: CPC	SEPT-19	SCALE: 1"=20'
CHECKED BY: SMC		

LANDSCAPING PLAN NOTES :

1. THE ASSESSORS TAX PARCEL NUMBER IS 131-10-008A
2. SUBJECT PROPERTY CONTAINS 33,207 S.F. OR 0.762 ACRES MORE OR LESS.
3. SQUARE FOOTAGE OF RETAURANT AND COVERED PATIO IS 2,741 S.F. (0.063 ACRES MORE OR LESS).
4. THE SQUARE FOOTAGE OF THE OFFICE BUILDING IS 1,006 S.F. (0.023 ACRES MORE OR LESS).
5. THE EXISTING ZONING IS C1.
6. LANDSCAPE AREAS SHALL HAVE UNDERGROUND DRIP IRRIGATION SYSTEM.
7. MATERIALS WITHIN SITE VISIBILITY TRIANGLES SHALL BE PLACED AS TO NOT INTERFERE WITH A VISIBILITY PLANE DESCRIBED BY TWO HORIZONTAL LINES LOCATED 30 INCHES AND 72 INCHES ABOVE FINISHED GRADE OF THE ROADWAY SURFACE.
8. ALL PLANT MATERIALS TO BE ON C.O.T. DROUGHT TOLERANT PLANT LIST.
9. ALL LANDSCAPED AREAS ARE TO BE DEPRESSED 9" FOR WATER HARVESTING.
10. ALL LANDSCAPED AREAS TO HAVE 2" DECOMPOSED GRANITE.

MAINTENANCE NOTES :

1. ALL MAINTENANCE SHALL BE THE RESPONSIBILITY OF THE OWNER.
2. MAINTENANCE SHALL BE PERFORMED ON A MONTHLY BASIS AS FOLLOWS:
   A. PRUNING AND CLIPPING FOR PEDESTRIAN VEHICULAR USE.
   B. REPLACEMENT OF DEAD AND UNHEALTHY PLANTS WITH PLANTS OF THE SAME SIZE AND TYPE.
   C. MAINTENANCE OF IRRIGATION SYSTEM.
3. THE WATER HARVESTING AREAS SHALL BE KEPT AT THE MINIMUM 9 INCH DEPRESSION.
4. THE DECOMPOSSED GRANITE AREAS SHALL BE KEPT AT THE SPECIFIED AREAS AND REPLENISHED AS REQUIRED.

LANDSCAPE PLAN KEY NOTES

1. PAVED PARKING AREA (20,125 SQ. FT. INCLUDING DRIVEWAY)
2. NEW 6" CONC. CURB PER PC/COT SD 209
3. 9" WATER HARVESTING AREA, (5,770 S.F. OR 4,328 C.F.)

SITE VISIBILITY TRIANGLES

SEE SHEET S5

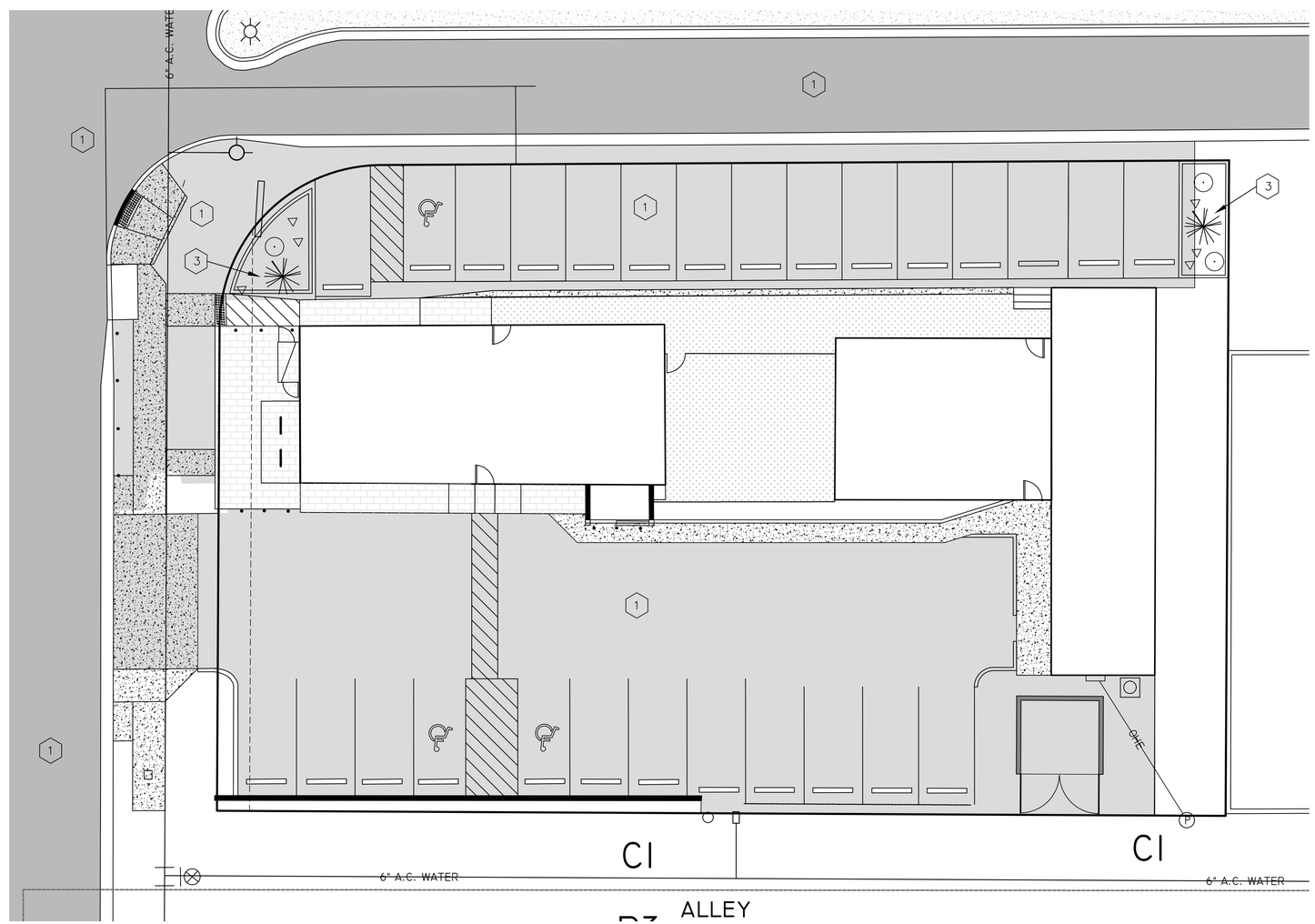

SCALE: 1" = 10'

LANDSCAPE PLAN KEY NOTES
SEE SHEET L1

LANDSCAPE LEGEND & INVENTORY				
KEY	BOTANICAL NAME	COMMONL NAME	SIZE	AMOUNT
⊛	Cercidium Microphyllum	FOOTHILLS PALO VERDE	15 GAL	0
✳	Prosposis Chilensis	CHILEAN MESQUITE	15 GAL	2
⊙	Nerium Oleander	OLEANDER	5 GAL	3
△	Caesalpinia Pulcherrima	RED BIRD OF PARADISE	1 GAL	7

NORTH LANDSCAPE BOARDER AREA A

(10 FT. x 170 FT. YARD AREA)

Trees Required 6
Trees Provided 0

Shrubs Required 7
Shrubs Provided 0

Accents Required 11
Shrubs Provided 0

Decomposed Granite Required
Decomposed Granite Not Provided

42" x 170± Decorative Masonry Wall Required
42" x 0' Decorative Masonry Wall Provided

35% Canopy Cover Required = 595 S.F.
Provided = 0 S.F.

WEST LANDSCAPE BOARDER AREA B

(10 FT. x 75 FT. YARD AREA)

Canopy Trees Required 8
Canopy Trees Provided 0

Shrubs Required 8
Shrubs Provided 0

Accents Required 12
Shrubs Provided 0

Decomposed Granite Required
Decomposed Granite Not Provided

35% Canopy Cover Required = 595 S.F.
Provided = 0 S.F.

PARKING TREE REQUIREMENTS
SECTION 7.6.4.B

PARKING SPACES PROVIDED = 27
TREES REQUIRED = 7
TREES PROVIDED = 8

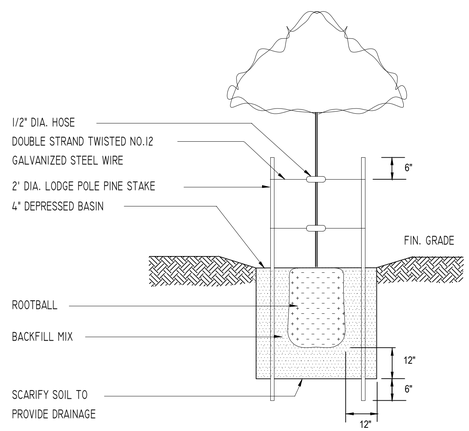

TREE PLANTING W/ DOUBLE STAKE

CITY OF TUCSON — DEVELOPMENT PACKAGE
PDSD APPROVAL

☐ Site/Dev Plan ☐ SCZ
☐ Tentative Plat ☐ FRZ
☐ Grading ☐ HDZ
☐ SWPPP ☐ WASH
☐ FUP ☐ Other

DVPKG MGR _____ Date _____
Zoning _____ Date _____
Engineering _____ Date _____
H/C Site _____ Date _____
Fire _____ Date _____
Landscape _____ Date _____
PL/ME _____ Date _____
Revision # _____ ☐ per letter in SIRE

CERTIFICATE NO. 53180 STEVEN M. CORRALES, JR. ARIZONA, U.S.A.

EXPIRES 6/30/20
SCE@SWCONSULTINGCE.COM

SOUTHWEST CONSULTING ENGINEERING
STEVEN M CORRALES, JR, PE, RLS
CONSULTING ENGINEERS / LAND SURVEYORS / LAND PLANNERS
2510 W. CALLE MORADO TUCSON, AZ 85745
(520) 241-2621
sce@swconsultingce.com

DP18-0037
5602 EAST 22ND STREET

DEVELOPEMNT PACKAGE
EL SUR RESTAURANT
-
LOTS 7 AND 8, BLOCK 1 OF NORTH GATE, BOOK 10, M.&P., PAGE 3 - Sec 24, T 14S, R 14E

LANDSCAPE PLAN | S4

DESIGNED BY: CPC
DRAWN BY: CPC
CHECKED BY: SMC
DATE: SEPT-19
SHEET 4 of 5
SCALE: 1"=10'

IRRIGATION NOTES :

1. THE PLAN IS SCHEMATIC, ACTUAL LOCATION OF IRRIGATION LINES AND EQUIPMENT MAY VERY.
2. MAINLINES ARE TO BE SCH 40 PVC. DRIP LINES ARE TO BE 1/2" POLYETHYLENE.
3. ALL MAINLINES, LATERALS, VALVES ETC. SHALL BE PLACED WITHIN PLANTING AREAS WHENEVER POSSIBLE.
4. THE ENTIRE IRRIGATION SYSTEM SHALL SATISFY ALL LOCAL AND STATE CODE REQUIREMENTS.
5. THE IRRIGATION SYSTEM SHALL BE INSTALLED PER THE MANUFACTURER'S SPECS.

INSTALLATION NOTES :

1. RIGID IRRIGATION PIPES & FLEXIBLE IRRIGATION LINES LOCATED UNDER PAVED SURFACES SHALL BE CONTAINED IN 4" ABS PIPE SLEEVES.
2. NON-PRESSURE LINES:
   POLYETHYLENE ARE TO BE BURIED 8" DEEP.
   PVC ARE TO BE BURIED 12" DEEP AT A MINIMUM.
3. PRESSURE LINES:
   CONSTANT MUST BE BURIED A MINIMUM OF 24" DEEP.
   INTERMITTENT MUST BE BURIED A MINIMUM 18" DEEP.
4. USE OF DETERGENTS OR LUBRICANTS IS STRICTLY PROHIBITED.

GENERAL HARVESTING NOTES:

1. THE GENERAL SITE FLOW IS SHEET FLOW FROM EAST TO WEST.
2. WATER HARVESTING IS PROPOSED IN THE TWO LANDSCAPE AREAS. THESE AREAS SHALL BE DEPRESSED 9" TO RETAIN WATER.
3. THE PLANTS USED FOR THIS SITE SHALL BE DROUGHT TOLERANT TO REDUCE THE DEMAND ON POTABLE WATER.
4. THE PROPERTY OWNER SHALL RETAIN THE SERVICES OF A QUALIFIED MAINTENANCE COMPANY TO ENSURE THAT THE IRRIGATION SYSTEM REMAINS OPERATIONAL AND FUNCTIONING PROPELY.
5. THE ESTIMATED WATER DEMAND IS ???? GALLONS PER YEAR.

PASSIVE HARVESTING NOTES:

1. A RAINBIRD ESP-SMT SMART MODULAR CONTROLLER WITH WEATHER BASED PROGRAMMING AND TIPPING RAIN GUAGE LOCATED AT THE ROOFLINE CAPABLE OF TURNING OFF IRRIGATION DURING RAIN STORMS.
2. MONTHLY RAIN DATA WILL BE MONITORED BY THE ESP-SMT SMART MODULAR CONTROLLER.
3. MONTHLY IRRIGATION DATA WILL BE RECORDED ON A SEPARATE WATER METER AND OBTAINED BY TUCSON WATER.

IRRIGATION LEGEND / SCHEMATIC

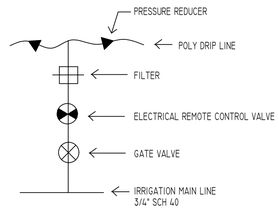

TYPICAL DETAIL AT EACH TREE LOCATION

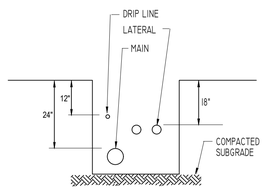

IRRIGATION TRENCHING DETAIL

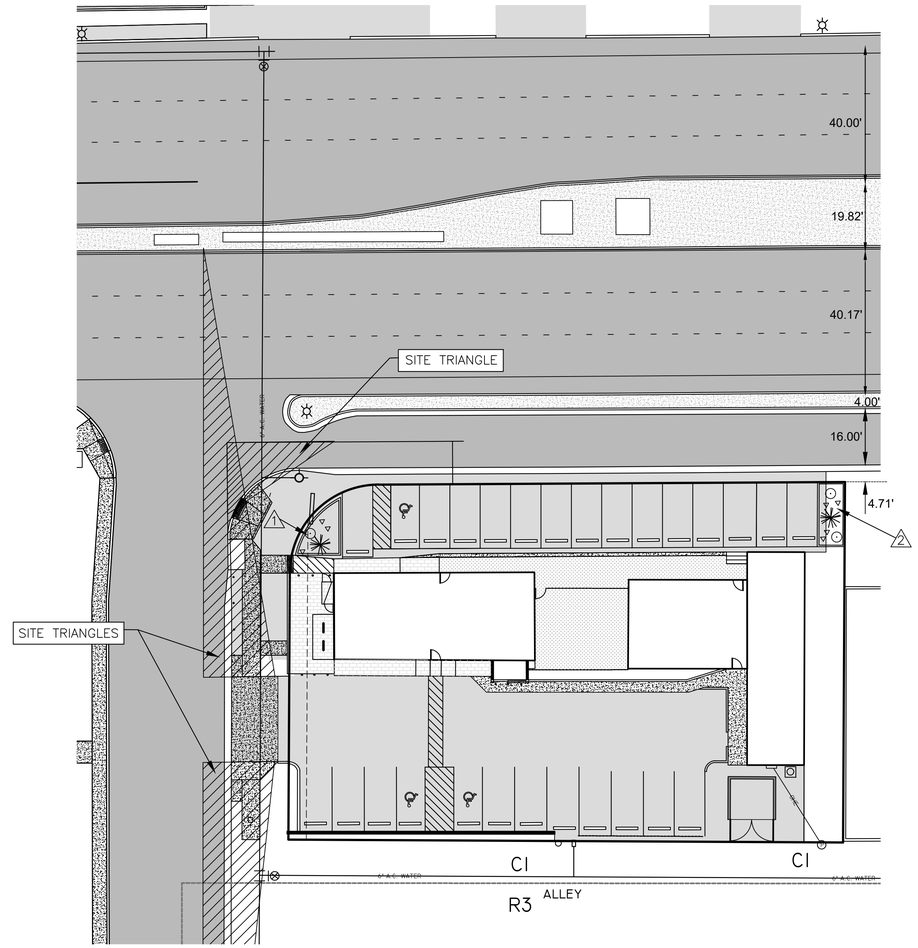

SCALE: 1" = 20'

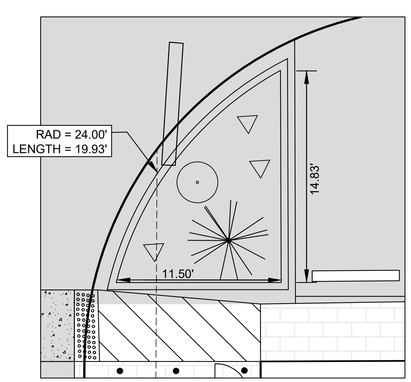

1 LANDSCAPE AREA #1
MEDIAN PLANTER

SCALE: 1" = 5'

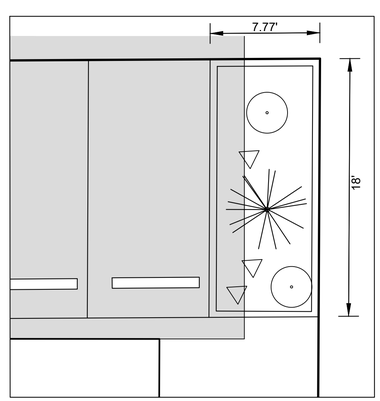

2 LANDSCAPE AREA #2
MEDIAN PLANTER

SCALE: 1" = 5'

CITY OF TUCSON — DEVELOPMENT PACKAGE / PDSD APPROVAL

- ☐ Site/Dev Plan
- ☐ Tentative Plat
- ☐ Grading
- ☐ SWPPP
- ☐ FUP
- ☐ SCZ
- ☐ FRZ
- ☐ HDZ
- ☐ WASH
- ☐ Other

DVPKG MGR ____ Date ____
Zoning ____ Date ____
Engineering ____ Date ____
H/C Site ____ Date ____
Fire ____ Date ____
Landscape ____ Date ____
PL/ME ____ Date ____
Revision # ____ ☐ per letter in SIRE

DP18-0037
5602 EAST 22ND STREET

CERTIFICATE NO. 6380 STEVEN M. CORRALES, JR. — Expires 6/30/19

EXPIRES 6/30/20
SCE@SWCONSULTINGCE.COM

CALL TWO WORKING DAYS BEFORE YOU DIG
1-(800)-782-5348
BLUE STAKE CENTER CALL COLLECT

SCE — SOUTHWEST CONSULTING ENGINEERING
STEVEN M CORRALES, JR, PE, RLS
CONSULTING ENGINEERS / LAND SURVEYORS / LAND PLANNERS
2510 W. CALLE MORADO TUCSON, AZ 85745
(520) 241-2621
sce@swconsultingce.com

DEVELOPEMNT PACKAGE
EL SUR RESTAURANT
-
LOTS 7 AND 8, BLOCK 1 OF NORTH GATE, BOOK 10, M.&P., PAGE 3 - Sec 24, T 14S, R 14E

LANDSCAPE NOTES/DETAILS	S5
DESIGNED BY: CPC	DATE: SEPT-19
DRAWN BY: CPC	SHEET 5 of 5
CHECKED BY: SMC	SCALE: 1"=20'

Front

Offsite North

East

22nd St
Jefferson Ave
1200 S
ONE WAY
BREAKFAST
$4.99
SPEED LIMIT
25

West

Rear

Offsite South