GRESHAM & BEACH
ARCHITECTS INC.
177 NORTH CHURCH AVENUE
SUITE 755
TUCSON . ARIZONA . 85701
TEL.520.882.0698
FAX.520.882.0989

95% CONSTRUCTION DOCUMENTS
NOT FOR CONSTRUCTION

City of Tucson

EL PUEBLO ACTIVITY CENTER ADDITION

Tucson, Arizona

CITY OF TUCSON
FACILITIES DESIGN & MANAGEMENT DIVISION
EL PUEBLO ACTIVITY CENTER
5100 S. MISSIONDALE RD.
TUCSON, AZ

REVISIONS

Number	Date	By

Designed	RAB/JC
Drawn	MLN
Checked	JC
Date	21 NOV 08
Job Number	27010.00

ABBREVIATIONS

@	AT
A/C	AIR CONDITIONING
AB	ANCHOR BOLT
ABC	AGGREGATE BASE COURSE
AC	ACOUSTICAL CEILING
ADJ	ADJACENT
AFF	ABOVE FINISH FLOOR
AGG	AGGREGATE
ALT	ALTERNATE
ALUM	ALUMINUM
ANCH	ANCHOR, ANCHORAGE
ANOD	ANODIZED
BD	BOARD
BFF	BELOW FINISH FLOOR
BLDG	BUILDING
BLK(G)	BLOCK(ING)
BM	BENCH MARK
BO	BOTTOM OF
BOT	BOTTOM
BRG	BEARING
BRK	BRICK
BSMT	BASEMENT
BUR	BUILT UP ROOFING
CMWP	COMPOSITE METAL WALL PANEL
C	CHANNEL
C/C	CENTER TO CENTER
CAB	CABINET
CB	CHALK BOARD,CATCH BASIN
CEM	CEMENT
CG	CORNER GUARD
CI	CAST IRON
CIP	CAST IN PLACE
CJ	CONTROL JOINT
CLG	CEILING
CLR	CLEAR(ANCE)
CMP	CORRUGATED METAL PIPE
CMTS	COMMENTS
CMU	CONCRETE MASONRY UNIT
CO	CLEAN OUT
COL	COLUMN
COMB	COMBINATION
CONC	CONCRETE
CONN	CONNECTION
CONST	CONSTRUCTION
CONT	CONTINUOUS OR CONTINUE
CORR	CORRIDOR,CORRUGATED
CPT	CARPET
CSK	COUNTERSINK
CT	CERAMIC TILE
CU	CUBIC
CU FT	CUBIC FOOT (FEET)
CW	COLD WATER
D	DEPTH
DEMO	DEMOLISH, DEMOLITION
DF	DRINKING FOUNTAIN
DIA	DIAMETER
DIAG	DIAGONAL
DIM	DIMENSION
DISP	DISPENSER
DN	DOWN
DO	DITTO
DP	DAMPPROOFING
DR	DOOR
DS	DOWNSPOUT
DTL	DETAIL
DWG	DRAWING
DWC	DRYWALL CHANNELS (HAT)
E	EAST
EA	EACH
EF	EACH FACE
EJ	EXPANSION JOINT
ELEC	ELECTRIC(AL)
ELEV	ELEVATION,ELEVATOR
EMER	EMERGENCY
EP	EPOXY PAINT
EQ	EQUAL
EQUIP	EQUIPMENT
ES	EXPOSED STRUCTURE
EST	ESTIMATE
EW	EACH WAY
EWC	ELECTRIC WATER COOLER
EXC	EXCAVAT(E)(ION)
EXH	EXHAUST
EXIST	EXISTING
EXP	EXPANSION
EXT	EXTERIOR
EIFS	EXT. INSULATION FINISH SYSTEM
F	FAHRENHEIT
FA	FIRE ALARM
FAB	FABRICATE
FD	FLOOR DRAIN
FDN	FOUNDATION
FE(C)	FIRE EXTINGUISHER(CABINET)
FF	FINISH FLOOR
FHC	FIREHOSE CABINET
FHR	FIREHOSE RACK
FIN	FINISH(ED)
FLA	FLASHING
FLEX	FLEXIBLE
FLUOR	FLUORESCENT
FO	FACE OF
FP	FIREPROOF
FR	FIRE RETARDANT
FRP	FIBER REINFORCED PLASTIC
FT	FOOT,FEET
FTG	FOOTING
FUR	FURRED(ING)
FUT	FUTURE
GA	GAGE,(GUAGE)
GALV	GALVANIZED
GC	GENERAL CONTRACT(OR)
GD	GRADE
GL	GLASS, GLAZING
GWB	GYPSUM WALLBOARD
GYP	GYPSUM
HW	HIGH IMPACT WOOD FIBER PANEL
H(T)	HEIGHT
HB	HOSE BIBB
HC	HOLLOW CORE
HDBD	HARDBOARD
HD	HEAVY DUTY
HDWD	HARDWOOD
HDWR	HARDWARE
HM	HOLLOW METAL
HORZ	HORIZONTAL
HP	HIGH POINT
HR	HOUR
HVAC	HEATING/VENTILATING/ AIR CONDITIONING
HW	HOT WATER
ICMWP	INSULATED COMPOSITE METAL WALL PANEL
ID	INSIDE DIAMETER
IE	INVERT ELEVATION
IN	INCH(ES)
INCL	INCLUDING
INSUL	INSULATION
INT	INTERIOR
JC	JANITORS CLOSET
JST	JOIST
JT	JOINT
KD	KNOCKED DOWN
KIT	KITCHEN
KO	KNOCK OUT
KP	KICK PLATE
L	LENGTH,LONG
LAM	LAMINATE
LAB	LABORATORY
LAV	LAVATORY
LF	LINEAL FEET
LH	LEFT HAND
LL	LIVE LOAD
LLH	LONG LEG HORIZONTAL
LLV	LONG LEG VERTICAL
LP	LOW POINT
LT	LIGHT
LTWT	LIGHTWEIGHT
LVR	LOUVER
MAS	MASONRY
MAX	MAXIMUM
MATL	MATERIAL
MED	MEDIUM
MECH	MECHANICAL
MET	METAL
MEZZ	MEZZANINE
MFR	MANUFACTURER
MH	MANHOLE
MIN	MINIMUM
MISC	MISCELLANOUS
MO	MASONRY OPENING
MOD	MODULAR
MOV	MOVABLE
MTD	MOUNTED
MWP	METAL WALL PANEL (SYSTEM)
N	NORTH
NA	NOT APPLICABLE
NIC	NOT IN CONTRACT
NOM	NOMINAL
NRC	NOISE REDUCTION COEFFICIENTS
NTS	NOT TO SCALE
NO	NUMBER
OA	OVERALL
OC	ON CENTER(S)
OD	OUTSIDE DIAMETER
OFCI	OWNER FURNISHED CONTRACTOR INSTALLED
OFF	OFFICE
OFOI	OWNER FURNISHED OWNER INSTALLED
OH	OVERHEAD,OPPOSITE HAND
OPG	OPENING
OPP	OPPOSITE
ORD	OVERFLOW ROOF DRAIN
P	PAINT(ED)
PAR	PARALLEL
PART	PARTITION
PART BD	PARTICLE BOARD
PC	PIECE
PCC	PRECAST CONCRETE
PCF	POUNDS PER CUBIC FOOT
PREFAB	PERFORATE(D)
PERIM	PERIMETER
PERP	PERPENDICULAR
PF	PREFABRICATED
PJ	PANEL JOINT
PL	PLASTER,PLATE,PROPERTY LINE
PLBG	PLUMBING
PLAM	PLASTIC LAMINATE
PLF	POUNDS PER LINEAL FOOT
PNL	PANEL
PO	POWER OPERATED
PR	PAIR
PSF	POUNDS PER SQUARE FOOT
PSI	POUNDS PER SQUARE INCH
PT	POINT
PTD	PAPER TOWEL DISPENSER
PTR	PAPER TOWEL RECEPTOR
PVC	POLYVINYL CHLORIDE
PVMT	PAVEMENT
PWD	PLYWOOD
QT	QUARRY TILE
QTR	QUARTER
QTY	QUANTITY
(R)	RECESSED
R	RADIUS,RISER ROUND
RA	RETURN AIR
RB	RESILIENT BASE
RCP	REINFORCED CONCRETE PIPE, REFLECTED CEILING PLAN
RD	ROOF DRAIN
RE(F)	REFERENCE
RELO	RELOCATION
REPL	REPLACE
RES	RESILIENT
REV	REVISION(S),REVISED
RF	RIGID FIBERGLASS
RFG	ROOFING
RH	RIGHT HAND
RM	ROOM
RO	ROUGH OPENING
ROW	RIGHT OF WAY
REQ'D	REQUIRED
RWL	RAINWATER LEADER
(S)	SEALED, SOUTH
SC	SURFACE MOUNTED
SCHED	SOLID CORE
SECT	SCHEDULE
SD	SECTION
SDG	STORM DRAIN
SF	SIDING
SHT	SQUARE FEET
SHWR	SHEET
SIM	SHOWER
SM	SIMILAR
SP	SHEET METAL
SPECS	SOUNDPROOF
SPKR	SPECIFICATIONS
SPL	SPEAKER
SQ	SPECIAL
SS	SQUARE
SST	SERVICE SINK
ST	STAINLESS STEEL
STC	STEEL, STREET
STD	SOUND TRANSMISSION COEFFICIENT
STOR	STANDARD
STRUC	STORAGE
	STRUCTURAL
SUSP	SUSPENDED
SV	SEAMLESS VINYL
SW	SWITCH
SWR	SEWER
SYM	SYMMETRY(ICAL)
T	THICKNESS, TEE
TD	TRENCH DRAIN
T&G	TONGUE AND GROOVE
TB	TACKBOARD
TEL	TELEPHONE
TEMP	TEMPERATURE,TEMPORARY
TERR	TERRAZZO
THK	THICK(NESS)
TO	TOP OF
TOC	TOP OF CONCRETE
TOIL	TOILET
TOP	TOP OF PARAPET
TOS	TOP OF STEEL
TOW	TOP OF WALL
TPD	TOILET PAPER DISPENSER
TV	TELEVISION
TYP	TYPICAL
UG	URINAL
UL	UNDERGROUND UNDERWRITERS LABORATORY
UNF	UNFINISHED
UNO	UNLESS NOTED OTHERWISE
VB	VAPOR BARRIER
VCT	VINYL COMPOSITION TILE
VERT	VERTICAL
VNR	VENEER
VPL	VENEER PLASTER
VWC	VINYL WALL COVERING
W	WIDTH, WIDE, WEST
W/	WITH
W/O	WITHOUT
W/W	WALL TO WALL
WC	WATER CLOSET
WD	WOOD
WDW	WINDOW
WH	WALL HUNG, WATER HEATER
WI	WROUGHT IRON
WM	WIRE MESH
WP	WATERPROOFING
WR	WATER REPELLENT
WS	WEATHERSTRIP
WSCT	WAINSCOT
WT	WEIGHT
WWF	WELDED WIRE FABRIC
YD	YARD

SYMBOLS

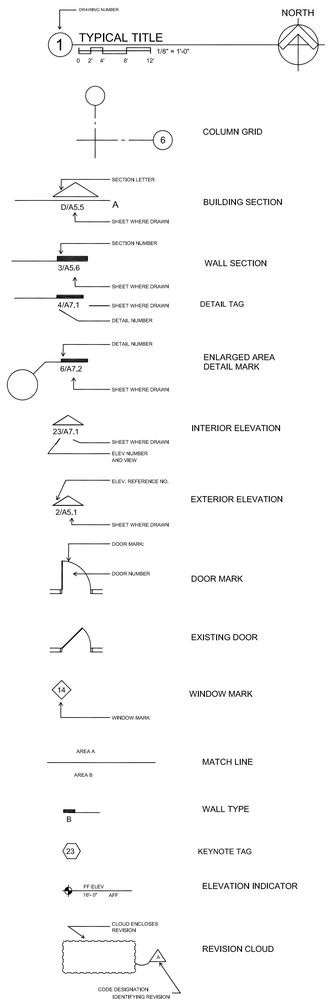

PROJECT DATA

GENERAL NOTES:

1. WE CERTIFY THAT TO THE BEST OF OUR KNOWLEDGE AND INFORMATION, AND IN ACCORDANCE WITH ACCEPTED PROFESSIONAL STANDARDS, WE HAVE COMPLIED WITH APPLICABLE PORTIONS OF THE ARIZONA HANDICAP CODES PERTAINING TO BUILDING ACCESSIBILITY FOR THE PHYSICALLY HANDICAPPED.
2. DRAWINGS SHALL NOT BE SCALED. ALL WORK SHALL BE LAID OUT IN ACCORDANCE WITH WRITTEN DIMENSIONS.
3. CONTRACTOR SHALL PERFORM ALL DEMOLITION REQUIRED FOR THE COMPLETE INSTALLATION OF THE WORK WHETHER OR NOT SUCH DEMOLITION IS INDICATED ON THE DRAWINGS.
4. DIMENSIONS SHOWN ARE FINISH TO FINISH UNLESS OTHERWISE NOTED.
5. DETAILS ARE APPLICABLE WHETHER OR NOT SPECIFICALLY REFERENCED.

MATERIALS

PLAN

- CMU
- STL. FRAME
- WD. FLOOR
- GLAZING
- GWB

ELEVATION

- SPLIT-FACE CMU

SECTION

- CMU
- GWB
- INSULATION BOARD
- CONCRETE
- RUBBER/VINYL
- ACT
- WD. CONTINOUS
- WD. PARTIAL
- PLYWOOD
- SOLID WOOD
- STEEL

CODE ANALYSIS

JOB ADDRESS: 5100 S MISSIONDALE RD ARCHITECT: Gresham & Beach Architects

SIGNATURE: _____ DATE: 06/17/08

CODE ANALYSIS DATA

TO FACILITATE PLAN REVIEW, ATTACH COMPLETED COPY TO APPLICATION/DRAWINGS

Summary of Governing Regulations

Code	Title	Edition	Local Amendments
Building Code	IBC	2006	Yes
Accessibility Code	ICC/ANSI A117.1	2003	Yes
Mechanical Code	IMC	2006	Yes
Electrical Code	NEC	2005	Yes
Plumbing Code	UPC	2006	Yes
Fire Prevention Code	IFC	2003	Yes
Zoning Code	COT LAND USE CODE	CURRENT	-
Energy Code	IECC	2006	Yes

General Building Summary

Height and Area

Building	Occupancy Group(s)	Type of Construction	Sprinkler System	Building Area Actual	Building Area Allowable	Bldg Ht (ft/# of Stories) Actual	Bldg Ht (ft/# of Stories) Allowable
	A-3	II	Yes	~8604	15,500	1	3

Mixed Occupancy

Separated Uses	Y (N)	Nonseparated Uses	Y N		
Fire Area	Occ Use	Fire Area	Occ Use	Fire Area	Occ Use	Fire Area	Occ Use

Special Uses and Occupancy

Separated Uses	Y (N)	Special Use

Allowable Area Calculation

(Provide additional calculations for each building or separated use)

Area Modifications (IBC 506)	
Allowable Area per Floor (Aa)	
Tabular Area per Floor (At)	
Area Increase for Frontage (If)	N/A
Area Increase for Sprinklers	N/A
Building Perimeter Public Way (F)	N/A
Entire Building Perimeter	N/A
Minimum Width of Public Way (W)	N/A
Allowable Area (Aa)	N/A
Unlimited Area for AFS	N/A

Occupant Load Requirements

Floor level		Teen Room	Music Room	Dance Room	Ceramics	Cer. Patio	Prep.	Storage	Total
Gross area		1482 sq. ft.	1233 sq. ft.	1327 sq. ft.	1452 sq. ft.	400 sq. ft.	1100 sq. ft.	310 sq. ft.	6904 sq. ft.
Occupancy		29	24	26	29	4	22	3	137
Req'd width	door	32" clr.	32" clr.	32" clr.	32" clr.	32" clr.	32" clr.	32" clr.	
Provided width	door	2 @ 42"	1 @ 42"	2 @ 42"	2 @ 42"	1 @ 42"	1 @ 48" 2 @ 80"	1 @ 42" 1 @ 72"	

DRAWING INDEX

NO.	SHEET	DESCRIPTION
		GENERAL
1		COVER SHEET
2	G1.0	GENERAL INFO./ DRAWING INDEX
3	G2.0	EXIT PLAN
		CIVIL
4	C-1.0	CIVIL GENERAL NOTES
5	C-1.1	PAVING AND GRADING PLAN
6	C-1.2	UTILITIES PLAN
		LANDSCAPE
7	L-0	GENERAL LANDSCAPE NOTES
8	L-1	NATIVE PLANT PRESERVATION PLAN
9	L-2	PLANTING PLAN
10	L-3	PLANTING DETAILS
11	L-4	IRRIGATION PLAN
12	L-5	IRRIGATION DETAILS
		ARCHITECTURAL
13	A0.1	ARCHITECTURAL SITE PLAN
14	A1.0	COMPREHENSIVE FLOOR PLAN/ DEMOLITION PLAN
15	A1.1	FLOOR PLAN NORTH
16	A1.2	FLOOR PLAN SOUTH
17	A1.3	ENLARGED FLOOR PLAN
18	A1.4	ENLARGED FLOOR PLAN
19	A2.1	SCHEDULES
20	A2.2	DOOR/ WINDOW DETAILS
21	A3.1	RCP NORTH
22	A3.2	RCP SOUTH
23	A3.3	CEILING DETAILS
24	A4.1	ROOF PLAN
25	A4.2	ROOF DETAILS
26	A5.1	EXTERIOR ELEVATIONS
27	A5.2	BUILDING SECTIONS
28	A6.1	INTERIOR ELEVATIONS
29	A6.2	INTERIOR ELEVATIONS
30	A8.1	WALL SECTIONS
31	A8.2	WALL SECTIONS
32	A9.1	MISC. DETAILS
33	A9.2	MILLWORK DETAILS
34	IA1.1	FINISH SCHEDULE/ FURNISHING PLAN
		STRUCTURAL
35	S-1	STRUCTURAL FOUNDATION/ FRAMING PLANS
36	S-2	GENERAL STRUCTURAL NOTES
37	S-3	STRUCTURAL DETAILS
38	S-4	STRUCTURAL DETAILS
		MECHANICAL
39	M-1.1	MECHANICAL PLAN
40	M-2.1	MECHANICAL SCHEDULES
41	M-3.1	MECHANICAL DETAILS
		PLUMBING
42	P-1.1	PLUMBING PLAN
		ELECTRICAL
43	E-00	ELECTRICAL SYMBOL LEGEND
44	E-1.1	POWER PLAN NORTH
45	E-1.2	POWER PLAN SOUTH
46	E-2.1	SPECIAL SYSTEMS PLAN NORTH
47	E-2.2	SPECIAL SYSTEMS PLAN SOUTH
48	E-3.1	LIGHTING PLAN NORTH
49	E-3.2	LIGHTING PLAN SOUTH
50	E-4.1	ELECTRICAL ONE LINE DIAGRAM
51	ED 1	ELECTRICAL DEMOLITION PLAN
52	T2.0	ITS PLAN NORTH
53	T2.1	ITS PLAN NORTH DETAILS

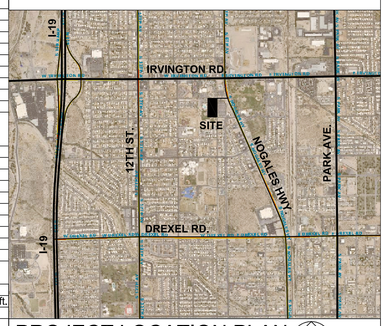

PROJECT LOCATION PLAN NORTH

GRESHAM BEACH ARCHITECTS INC.
177 NORTH CHURCH AVENUE SUITE 755
TUCSON . ARIZONA . 85701
TEL.520.882.0988
FAX.520.882.0989

95% CONSTRUCTION DOCUMENTS NOT FOR CONSTRUCTION

CITY OF TUCSON
FACILITIES DESIGN & MANAGEMENT DIVISION

EL PUEBLO ACTIVITY CENTER

5100 S. MISSIONDALE RD.
TUCSON, AZ

REVISIONS

Number	Date	By

Designed	RAB/JC
Drawn	MLN
Checked	JC
Date	21 NOV 08
Job Number	27010.00

GENERAL INFO./ DRAWING INDEX

G1.0

OF

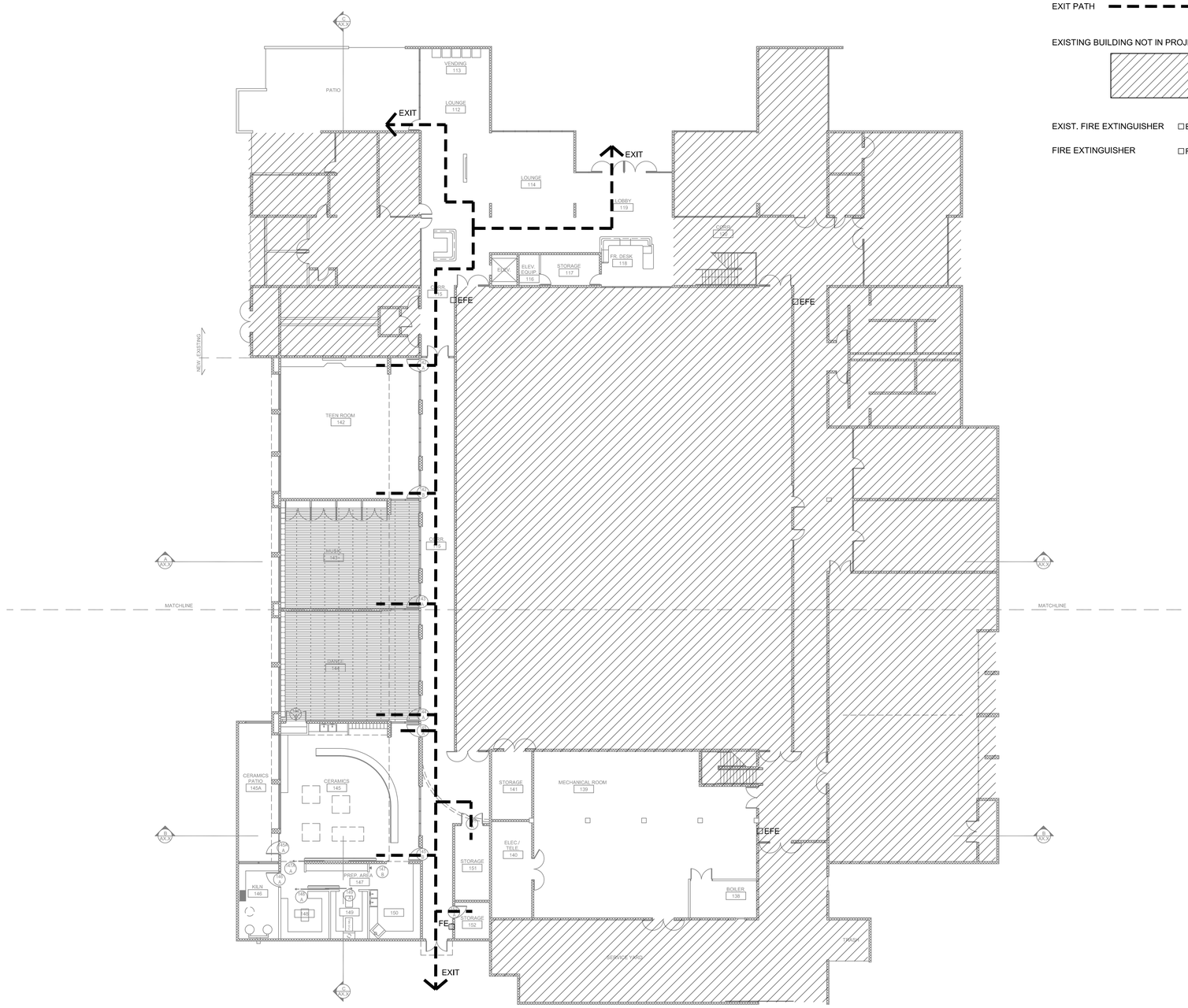

LEGEND

EXIT PATH

EXISTING BUILDING NOT IN PROJECT

EXIST. FIRE EXTINGUISHER ☐EFE

FIRE EXTINGUISHER ☐FE

1 **EXIT PLAN**

1/16" = 1'-0"

0 4' 8' 16' 24'

GRESHAM BEACH ARCHITECTS INC.
177 NORTH CHURCH AVENUE
SUITE 755
TUCSON, ARIZONA. 85701
TEL.520.882.0698
FAX.520.882.0989

95% CONSTRUCTION DOCUMENTS NOT FOR CONSTRUCTION

CITY OF TUCSON
FACILITIES DESIGN & MANAGEMENT DIVISION

EL PUEBLO ACTIVITY CENTER

5100 S. MISSIONDALE RD.
TUCSON, AZ

REVISIONS

Number	Date	By

Designed	RAB/JC
Drawn	MLN
Checked	JC
Date	21 NOV 08
Job Number	27010.00

EXIT PLAN

G2.0

OF

IMPROVEMENT PLANS FOR
EL PUEBLO ACTIVITIES CENTER
LOCATED WITHIN THE NW 1/4, SEC 01, T15S, R13E, G&SRM, PIMA COUNTY, ARIZONA

GENERAL NOTES

1. ALL CONSTRUCTION ACTIVITY AND TEST METHODS SHALL BE IN CONFORMANCE WITH PIMA COUNTY/CITY OF TUCSON STANDARD SPECIFICATIONS FOR PUBLIC IMPROVEMENTS (PC/COT SSPI) 2003 EDITION OR CURRENT EDITION.
2. DRAINAGE PIPE SHALL CONFORM TO PC/COT SSPI SECTION 5010R AS DIRECTED BY THE ENGINEER.
3. PIPE BEDDING SHALL CONFORM TO PC/COT STANDARD DETAIL 108.
4. AGGREGATE BASE COURSE SHALL CONFORM TO PC/COT SSPI SECTION 303.
5. ASPHALTIC CONCRETE SHALL CONFORM TO PC/COT SSPI SECTION 406. (INDICATE MIX TYPE).
6. ALL CONCRETE SHALL CONFORM TO PC/COT SSPI SECTION 1006, CLASS S, 3,000 PSI COMPRESSIVE STRENGTH AT 28 DAYS, UNLESS OTHERWISE SPECIFIED.
7. PAVEMENT SECTION DESIGN DOCUMENTATION, ARE IN ACCORDANCE TO THE APPROVED GEOTECHNICAL REPORT, REPORT NAME AND FIRM NAME, PROJECT NUMBER.
8. ALL DRAINAGE INFRASTRUCTURES, INDICATED ON THE PLANS, ARE IN ACCORDANCE TO THE APPROVED DRAINAGE REPORT APPROVED BY DEVELOPMENT SERVICES DEPARTMENT.
9. ALL CHANGES TO THESE PLANS MUST BE CLEARED BY THE CITY OF TUCSON CITY ENGINEER'S PERMITS AND CODES SECTION, PRIOR TO CONSTRUCTION.
10. THE CITY SHALL NOT BE HELD LIABLE FOR ANY ERRORS AND/OR OMISSIONS ON THESE PLANS. ITEMS NOT MEETING CITY STANDARDS SHALL BE REPAIRED/REPLACED AT NO COST TO THE CITY.
11. THE ENGINEER OF RECORD SHALL SUBMIT TO THE CITY FOR REVIEW ANY CHANGES TO THE APPROVED PLANS PRIOR TO CONSTRUCTION. ADDITIONALLY, THE ENGINEER OF RECORD SHALL CERTIFY ALL CHANGES MEETING ALL APPLICABLE STANDARDS, CODES, AND ORDINANCES.
12. AN EXCAVATION PERMIT SHALL BE OBTAINED FROM THE CITY OF TUCSON TRANSPORTATION DEPARTMENT PRIOR TO ANY WORK WITHIN THE PUBLIC RIGHT-OF-WAY.
13. A PRE-CONSTRUCTION FIELD MEETING SHALL BE CONDUCTED WITH THE CITY OF TUCSON TRANSPORTATION INSPECTOR PRIOR TO ANY WORK WITHIN THE PUBLIC RIGHT-OF-WAY.
14. THE EXTENT AND TYPE OF SURFACE TREATMENTS/REPAIRS INDICATED ON THE PLANS MAY NOT BE ALL INCLUSIVE OF THE WORK THAT IS NEEDED. ADDITIONAL REPAIRS, PAVING, OR REPLACEMENT MAY BE NEEDED DEPENDING ON FIELD CONDITIONS.
15. THE CONTRACTOR SHALL CONTACT AND/OR COORDINATE ANY WORK WITH COT STREETS & TRAFFIC MAINTENANCE DIVISION, MEDIAN ISLAND MAINTENANCE SECTION (791-5279, EXT. 234) PRIOR TO DISTURBING ANY COT/DOT LANDSCAPING OR IRRIGATION SYSTEMS. ADDITIONALLY, THE CONTRACTOR SHALL REPAIR OR REPLACE ANY DISTURBED COT/DOT LANDSCAPING OR IRRIGATION SYSTEMS, INCLUDING REPLACEMENT OF ANY DAMAGED PLANTS. CONTACT GARY WITTWER @ 400-2645 FOR INSPECTION AND PERMITS FOR LANDSCAPING. FOR IRRIGATION REMOVAL/REPLACEMENT CONTACT PAUL ROSENBOOM @ 237-7386.
16. THE PIA INSPECTOR SHALL VERIFY THAT THE "SAW-CUT" LINE IS LOCATED WITHIN COMPETENT PAVEMENT. ADJUSTMENTS TO THE PLAN SHALL BE DOCUMENTED AND AS-BUILT; A ONE FOOT MINIMUM SHALL BE PROVIDED."
17. CONTRACTOR SHALL OBTAIN ALL OTHER PERMITS AS REQUIRED BY LOCAL, STATE AND FEDERAL REQUIREMENTS.
18. A COPY OF THE APPROVED PLAN SHALL BE KEPT IN AN EASILY ACCESSIBLE LOCATION ON THE SITE AT ALL TIMES DURING CONSTRUCTION.
19. SIGNAGE AND STRIPING SHOULD BE COORDINATED WITH TRAFFIC ENGINEERING AND INSTALLED AT NO EXPENSE TO THE PUBLIC. CALL TRAFFIC ENGINEERING AT 791-4259 PRIOR TO THE INSTALLATION OR REMOVAL OF STRIPING AND SIGNAGE.
20. UPON COMMENCEMENT OF WORK, TRAFFIC CONTROL DEVICES SHALL BE POSTED AND MAINTAINED BY THE CONTRACTOR UNTIL SUCH TIME AS THE WORK IS COMPLETED. ALL WARNING SIGNS BARRICADES ETC. SHALL BE IN ACCORDANCE WITH THE MANUAL ON UNIFORM TRAFFIC CONTROL DEVICES ADOPTED BY THE STATE OF ARIZONA PURSUANT TO A.R.S. 28-650. CONTACT TRAFFIC ENGINEERING, 791-4259, 48-HOURS PRIOR TO PLACING OR REMOVING ANY SAID TRAFFIC CONTROL DEVICES.
21. CONTRACTOR SHALL CALL BLUE STAKE AS MANDATED BY THE ARIZONA REVISED STATUTES AT 1-800-782-5348 BEFORE ANY CONSTRUCTION BEGINS TO VERIFY LOCATION OF EXISTING UTILITIES SHOWN OR NOT SHOWN. EXISTING UTILITY LOCATIONS SHOWN HEREON ARE ONLY APPROXIMATE. IT IS THE CONTRACTOR'S RESPONSIBILITY TO CONFIRM HORIZONTAL AND VERTICAL LOCATION OF ALL UTILITIES WITHOUT DAMAGING SAME. DAMAGED UTILITIES SHALL BE REPAIRED AT NO EXPENSE TO THE CITY.
22. THE CONTRACTOR SHALL CONTACT AND/OR COORDINATE ANY WORK WITH COT STREETS & TRAFFIC MAINTENANCE DIVISION, ELECTRIC SHOP 791-3154 PRIOR TO RELOCATION OR PLACEMENT OF ANY STREET LIGHTING OR TRAFFIC FACILITIES. CONTACT ERNIE ENCINAS AT 791-3154 FOR STREET LIGHTING/TRAFFIC SIGNAL PLAN REVIEW.
23. THE CONTRACTOR SHALL COMPLY WITH ALL APPLICABLE OCCUPATIONAL SAFETY AND HEALTH ADMINISTRATION REGULATIONS.
24. FLOODPLAIN USE PERMIT NO._____ HAS BEEN ISSUED BY DEVELOPMENT SERVICES DEPARTMENT FOR WORK IMPACTING CITY AND FEMA FLOODPLAINS.

ABBREVIATIONS

AL CAP	ALUMINUM CAP	FH	FIRE HYDRANT	PC	POINT OF CURVATURE
APPROX	APPROXIMATE	FL	FLOW LINE	PCC	PORTLAND CEMENT CONCRETE / POINT OF COMPOUND CURVE
ARCH	ARCHITECTURAL	FND	FOUND	PG	PAGE
ASPH	ASPHALT	G	GUTTER	PI	POINT OF INTERSECTION
BC	BRASS CAP	GB	GRADE BREAK	PL	PROPERTY LINE
BLDG	BUILDING	GRND	GROUND	POB	POINT OF BEGINNING
BM	BENCH MARK	GV	GATE VALVE	PRV	PRESSURE REDUCING VALVE
BOT	BOTTOM	HCS	HOUSE CONNECTION SEWER	PT	POINT
CB	CATCH BASIN	HDWL	HEADWALL	POT	POINT OF TANGENT
CFS	CUBIC FEET PER SECOND	HORIZ	HORIZONTAL	CY	CUBIC YARD
CIP	CAST IRON PIPE	HP	HIGH POINT	PVC	POLYVINYLCHLORIDE PIPE
CL	CENTERLINE	IN	INCH	PVMT	PAVEMENT
CMP	CORRUGATED METAL PIPE	INV	INVERT	QTR	QUARTER
CMU	CONCRETE MASONRY UNIT	IP	IRON PIN OR IRON PIPE	RCP	REINFORCED CONCRETE PIPE
CONC	CONCRETE	JT	JOINT	RD	ROOF DRAIN
CR	CURB RETURN	L	LENGTH	REC	RECORD
CTR	CENTER	LAT	LATITUDE	R	RADIUS
DIA	DIAMETER	LF	LINEAR FOOT	ROW	RIGHT-OF-WAY
DIP	DUCTILE IRON PIPE	LONG	LONGITUDINAL	RT	RIGHT
DKT	DOCKET	LP	LOW POINT/LIGHT POLE	S	SOUTH
DTL	DETAIL	LS	LANDSCAPE	SE	SOUTHEAST
DW	DRIVEWAY	LT	LEFT	SEC	SECTION
DWG	DRAWING	M	MEASURED	SIM	SIMILAR
E	EAST	MATL	MATERIAL	SPEC	SPECIFICATION
EA	EACH	MAX	MAXIMUM	SS	SANITARY SEWER
ELEC	ELECTRICAL	MB	MAIL BOX	STA	STATION
ELEV	ELEVATION	ME	MATCH EXISTING	STD	STANDARD
ESMT	EASEMENT	MECH	MECHANICAL	SWK	SIDEWALK
EXIST	EXISTING	MH	MANHOLE	SW	SOUTHWEST
FFE	FINISH FLOOR ELEVATION	MIN	MINIMUM	T	TANGENT
FG	FINISH GRADE	MISC	MISCELLANEOUS	TC	TOP OF CONCRETE OR CURB
		MON	MONUMENT	TW	TOP OF WALL
		N	NORTH	TYP	TYPICAL
		NE	NORTHEAST	UG	UNDERGROUND
		NIC	NOT IN CONTRACT	VERT	VERTICAL
		NO	NUMBER	W	WEST
		NTS	NOT TO SCALE	WL	WATER LINE
		NW	NORTHWEST	WTR	WATER
		OC	ON CENTER		
		PC/COT	PIMA COUNTY & CITY OF TUCSON		

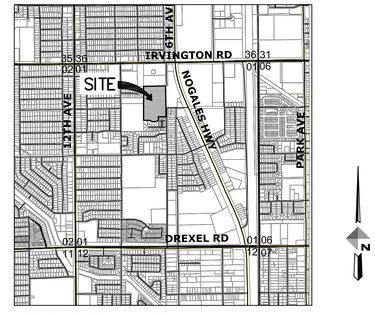

LOCATION MAP

SCALE: 3" = 1 MILE
LOCATED WITHIN THE NW 1/4, SEC 01, T15S, R13E, G&SRM, PIMA COUNTY, ARIZONA

OWNER/DEVELOPER

CITY OF TUCSON
FACILITIES DESIGN MANAGEMENT DIVISION
EL PUEBLO ACTIVITY CENTER
5100 S. MISSIONDALE RD.
TUCSON, AZ

SHEET INDEX

C1.0	CIVIL GENERAL NOTES, LOCATION MAP AND SITE LEGEND
C1.1	PAVING AND DRAINAGE PLAN
C1.2	UTILITIES PLAN

BASIS OF ELEVATION

THE BASIS OF ELEVATION FOR THIS SURVEY IS AN "X" ON N/W COR. OF C.B., S/W COR. OF IRVINGTON RD. AND ON MISSIONDALE RD TP# 921 IN THE CITY OF TUCSON BENCHMARK FIELD BOOK 2155 PAGE 5, HAVING AN ELEVATION OF 2479.794 (NAVD88).

LEGEND

FEATURE	NEW	EXISTING	FEATURE	NEW	EXISTING
MONUMENT			MANHOLE, SANITARY SEWER		
REBAR / ACP			SS CLEAN OUT		
MINOR CONTOUR LINE	40	40	TRAFFIC DIRECTIONAL ARROW		
MAJOR CONTOUR LINE	40	40	WATER MAIN	W	W
PROPERTY LINE			WATER METER	W	
RIGHT-OF-WAY LINE			FIRE HYDRANT		
CENTERLINE			RIP RAP		
AC PAVEMENT			GAS METER	G	
CURB			GAS LINE	G	G
CONCRETE SIDEWALK OR PAD			RETAINING WALL		
BUILDING EXTERIOR WALL			FENCE	x	x
BLOCK WALL			SWALES		
SLOPE ARROW			GRADE POINT	XX.XX	
SANITARY SEWER	S	S	GRADE BREAK		
BENCH MARK			LIMITS OF DISTURBANCE		
HEAVY DUTY AC PAVEMENT					

GRESHAM BEACH ARCHITECTS INC.
177 NORTH CHURCH AVENUE
SUITE 755
TUCSON, ARIZONA 85701
TEL. 520.882.0698
FAX. 520.882.0989

PRELIMINARY NOT FOR CONSTRUCTION
EXPIRES 12/31/09

DOWL HKM
166 W Alameda Street Tucson, Arizona 85701
Phone (520) 882-8696 Fax (520) 624-0384

COVER SHEET

CITY OF TUCSON
FACILITIES DESIGN & MANAGEMENT DIVISION
EL PUEBLO ACTIVITY CENTER
5100 S. MISSIONDALE RD.
TUCSON, AZ

REVISIONS

Number	Date	By

Designed	BMN
Drawn	BMN
Checked	JLO
Date	15 OCT 08
Job Number	T40506

C1.0

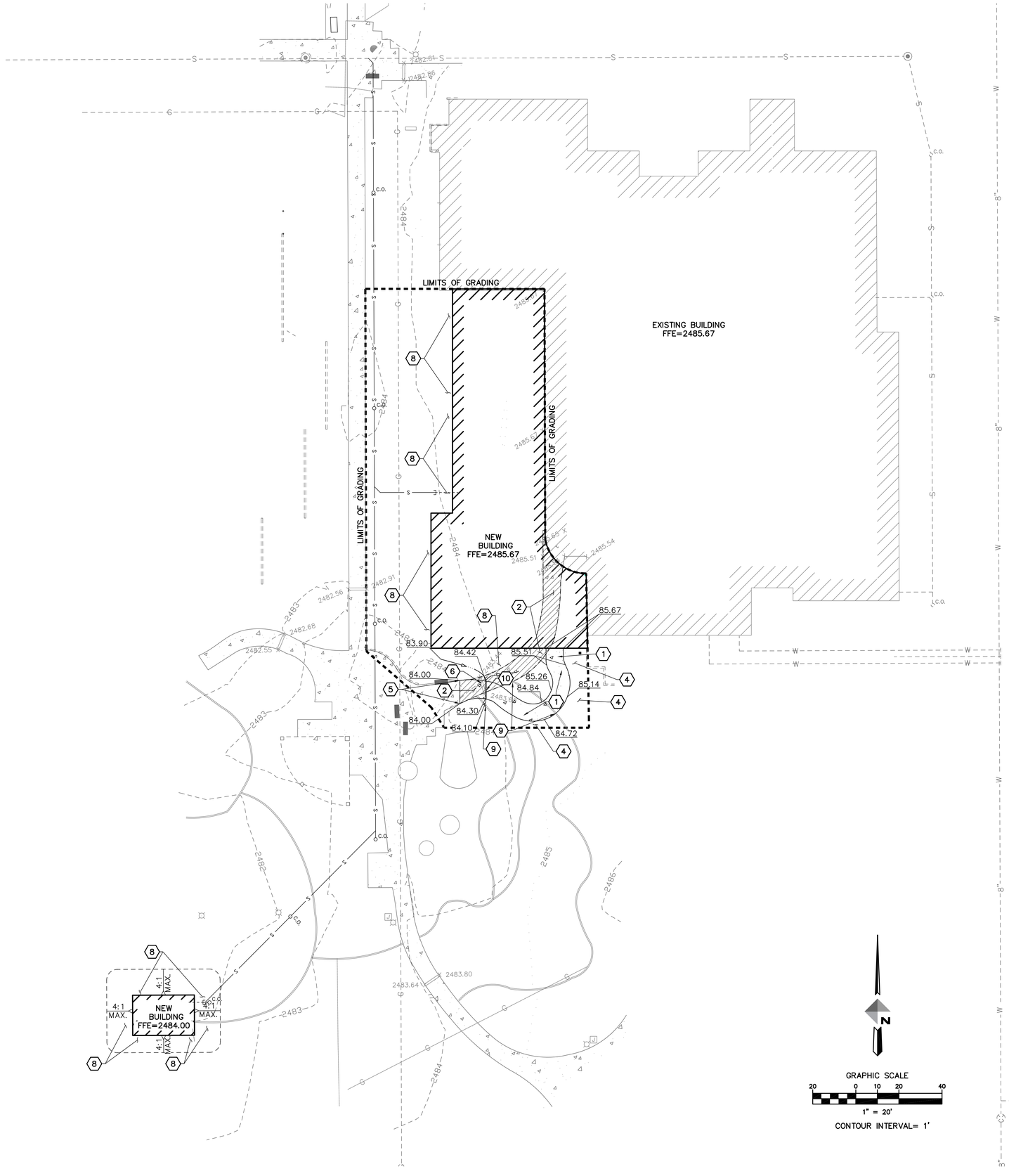

SITE KEY NOTES

1. CONSTRUCT CONCRETE SIDEWALK PER PC/COT STD DTL 200. SEE LANDSCAPE AND ARCHITECTURAL PLANS FOR COLOR AND SCORING.
2. SAWCUT AND REMOVE EXISTING CONCRETE SIDEWALK TO LIMITS SHOWN ON THIS PLAN.
3. HAND PLACE RIP-RAP, 12" THICK (D_{50}=6").
4. STRAIGHT GRADE LANDSCAPE AREA AT 4:1 MAXIMUM SLOPE FROM 2" BELOW TOP OF CURB OR SIDEWALK ELEVATION TO NEW ELEVATION SHOWN OR MATCH EXISTING GRADE. CO-ORDINATE ALL WORK WITH LANDSCAPE PLANS.
5. MATCH EXISTING GRADE.
6. REMOVE EXISTING SIDEWALK SCUPPER.
7. WATER HARVESTING AREA. SEE LANDSCAPE PLANS FOR DETAILS.
8. STRAIGHT GRADE LANDSCAPE AREA AT 4:1 MAXIMUM SLOPE FROM 2" BELOW FINISH FLOOR ELEVATION ALONG BUILDING EXTERIOR WALL TO NEW ELEVATION SHOWN OR TO MATCH EXISTING GRADE. CORDINATE ALL WORK WITH LANDSCAPE PLANS.
9. SAWCUT AND REMOVE EXISTING CONCRETE CURB TO LIMITS SHOWN ON THIS PLAN.
10. INSTALL NEW SIDEWALK SCUPPER PER PC/COT STD DTL 204.

GRESHAM BEACH ARCHITECTS INC.
177 NORTH CHURCH AVENUE
SUITE 755
TUCSON . ARIZONA . 85701
TEL.520.882.0698
FAX.520.882.0989

PRELIMINARY NOT FOR CONSTRUCTION
EXPIRES 12/31/09

DOWL HKM
166 W Alameda Street Tucson, Arizona 85701
Phone (520) 882-8696 Fax (520) 624-0384

PAVING AND GRADING PLAN

CITY OF TUCSON
FACILITIES DESIGN & MANAGEMENT DIVISION

EL PUEBLO ACTIVITY CENTER

5100 S. MISSIONDALE RD.
TUCSON, AZ

REVISIONS

Number	Date	By

Designed	BMN
Drawn	BMN
Checked	JLO
Date	15 OCT 08
Job Number	T40506

C1.1

GENERAL NOTES

1. DESIGN AND CONSTRUCTION CRITERIA BASED ON "UNIFORM STANDARD SPECIFICATIONS FOR PUBLIC WORKS CONSTRUCTION" PUBLISHED BY "PIMA COUNTY WASTEWATER MANAGEMENT" 2003 EDITION.
2. ALL TRENCHING AND BEDDING SHALL BE DONE IN ACCORDING TO PIMA COUNTY/COT STANDARD DETAIL WWM 104 FOR FLEXIBLE PIPE, WWM 105 FOR RIGID PIPE.
3. PRIVATE SEWER SHALL CONFORM TO THE 2006 EDITION OF THE INTERNATIONAL PLUMBING CODE AND LOCAL AMENDMENTS.
4. CONTRACTOR SHALL CONFIRM THE ELEVATION OF ALL CONNECTION POINTS TO THE EXISTING SEWER PRIOR TO EXCAVATING FOR THE INSTALLATION OF ANY NEW SEWER. MINOR ADJUSTMENT OF LOCATION, DEPTH, AND SLOPE IS TO BE COORDINATED BY THE CONTRACTOR TO MEET EXISTING CONDITIONS. IF SIGNIFICANT DISCREPANCIES ARE FOUND, THE ENGINEER SHALL BE CONTACTED FOR FURTHER INSTRUCTIONS.
5. ABS SEWER INSTALLATION SHALL CONFORM THE REQUIREMENTS OF IAPMO IS 11–"INSTALLATION STANDARD FOR ABS SEWER PIPE AND FITTINGS", WITH ASTM D2751–"STANDARD SPECIFICATION FOR ABS SEWER PIPE AND FITTINGS FORMING A PART OF THE INSTALLATION STANDARD.
6. PRIVATE SEWER TRENCHES SHALL BE A MAXIMUM OF 30 INCHES WIDE AND COMPLY WITH OSHA GUIDELINES. BEDDING (STD. SPEC. 501–3.02(A)) AND SHADING ((STD. SPEC. 501–3.04(A)(1)) MATERIAL SHALL SURROUND AND EXTEND AT LEAST 4 INCHES BELOW AND 6 INCHES ABOVE THE PIPE. MINIMUM COVER SHALL BE 24 INCHES.
7. PVC SEWER PLASTIC GRAVITY SEWER PIPE SHALL BE WITH INTEGRAL WALL BELL AND SPIGOT, JOINTS SHALL CONFORM TO ASTM D3034 FOR 4" THRU 15" SDR 35 AND F679 FOR 18" THRU 27". THE PIPE SHALL BE COLORED GREEN FOR IN–GROUND IDENTIFICATION AS SEWER PIPE. PVC SEWER LINE FITTINGS SHALL CONFORM TO ASTM D3034 FOR 4" TO 15" SDR35. FITTING JOINT DESIGN SHALL MEET THE WATERTIGHT PERFORMANCE REQUIREMENTS OF ASTM D3212 – "JOINTS FOR DRAIN AND SEWER PIPES USING FLEXIBLE ELASTOMERIC SEALS". GASKET MATERIAL USED FOR ELASTOMERIC SEALS IN PUSH–ON JOINTS SHALL CONFORM WITH ASTM F477.

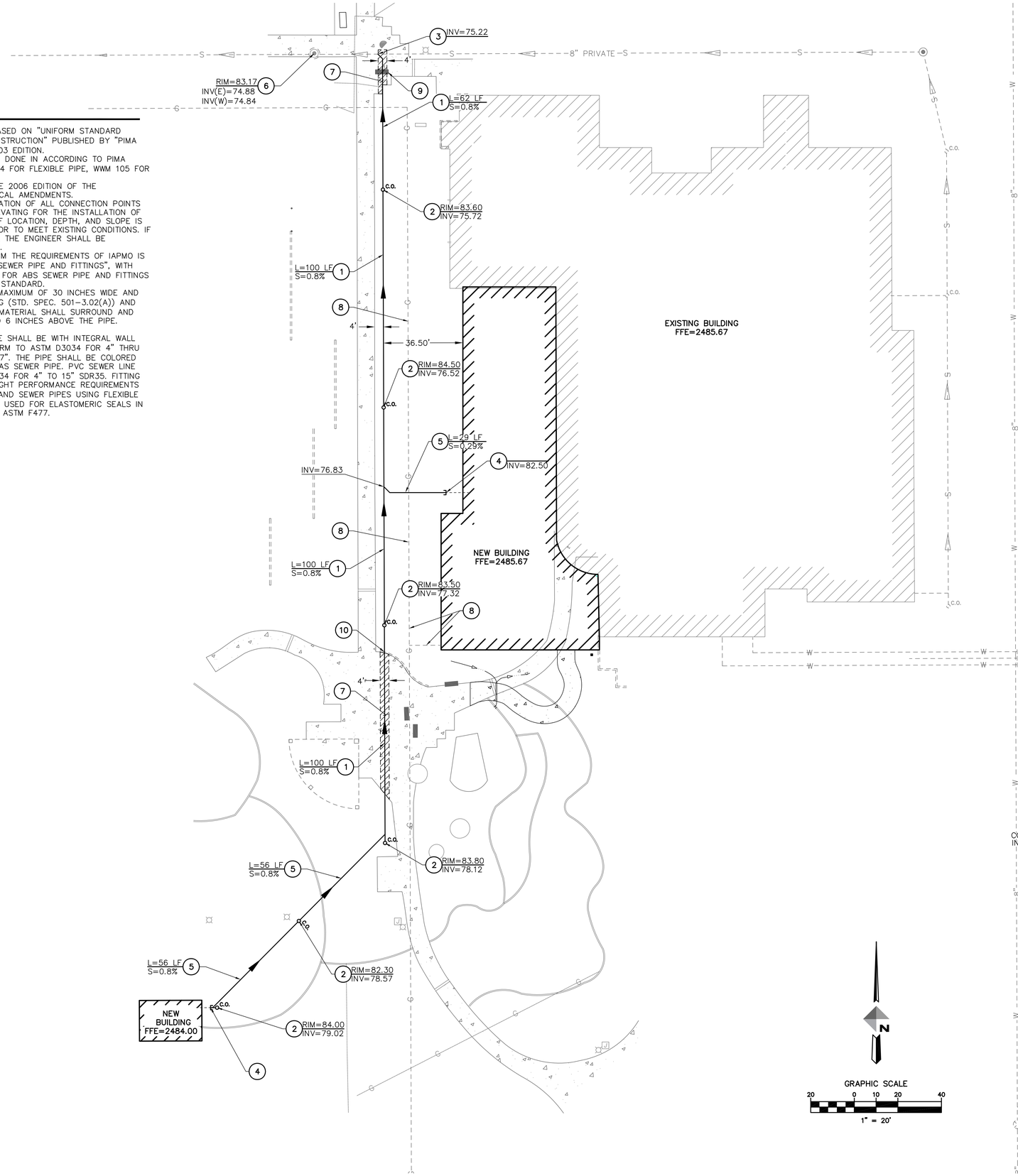

UTILITY KEY NOTES

1. INSTALL 6" P.V.C SDR–35 SANITARY SEWER LINE.
2. INSTALL SEWER CLEAN OUT PER DETAIL 1 ON THIS SHEET.
3. CONNECT TO EXISTING 8" SANITARY SEWER LINE WITH NECESSARY AND APPROPRIATE FITTINGS. CONTRACTOR TO VERIFY EXACT LOCATION AND ELEVATION PRIOR TO CONSTRUCTION.
4. INSTALL 4" CAP WITH A MARKER ABOVE GROUND. CAP AND MARKER TO BE REMOVED WHEN CONNECTION TO BUILDING PLUMBING IS MADE. SEE PLUMBING PLANS FOR CONTINUATION.
5. INSTALL 4" P.V.C SDR–35 SANITARY SEWER LINE.
6. EXISTING SANITARY SEWER MANHOLE.
7. SAWCUT REMOVE AND REPLACE EXISTING CONCRETE SIDEWALK IN KIND.
8. EXISTING GAS LINE TO BE RELOCATED ELSEWHERE BY OTHERS.
9. REMOVE AND SALVAGE EXISTING CONCRETE BENCH. REPLACE IN KIND UPON COMPLETION OF WORK.
10. TUNNEL UNDERNEATH EXISTING SITE WALL. PROTECT SITE WALL FROM DAMAGE.

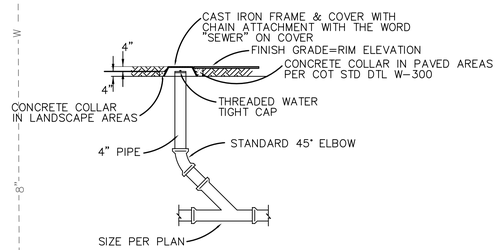

1 *SEWER CLEANOUT DETAIL*
NTS

GRAPHIC SCALE
20 0 10 20 40
1" = 20'

GRESHAM BEACH ARCHITECTS INC.
177 NORTH CHURCH AVENUE
SUITE 255
TUCSON, ARIZONA 85701
TEL.520.882.0698
FAX.520.882.0989

PRELIMINARY NOT FOR CONSTRUCTION
EXPIRES 12/31/09

DOWL HKM
166 W Alameda Street Tucson, Arizona 85701
Phone (520) 882–8696 Fax (520) 624–0384

UTILITIES PLAN

CITY OF TUCSON
FACILITIES DESIGN & MANAGEMENT DIVISION
EL PUEBLO ACTIVITY CENTER
5100 S. MISSIONDALE RD.
TUCSON, AZ

REVISIONS

Number	Date	By

Designed	BMN
Drawn	BMN
Checked	JLO
Date	15 OCT 08
Job Number	T40506

C1.2

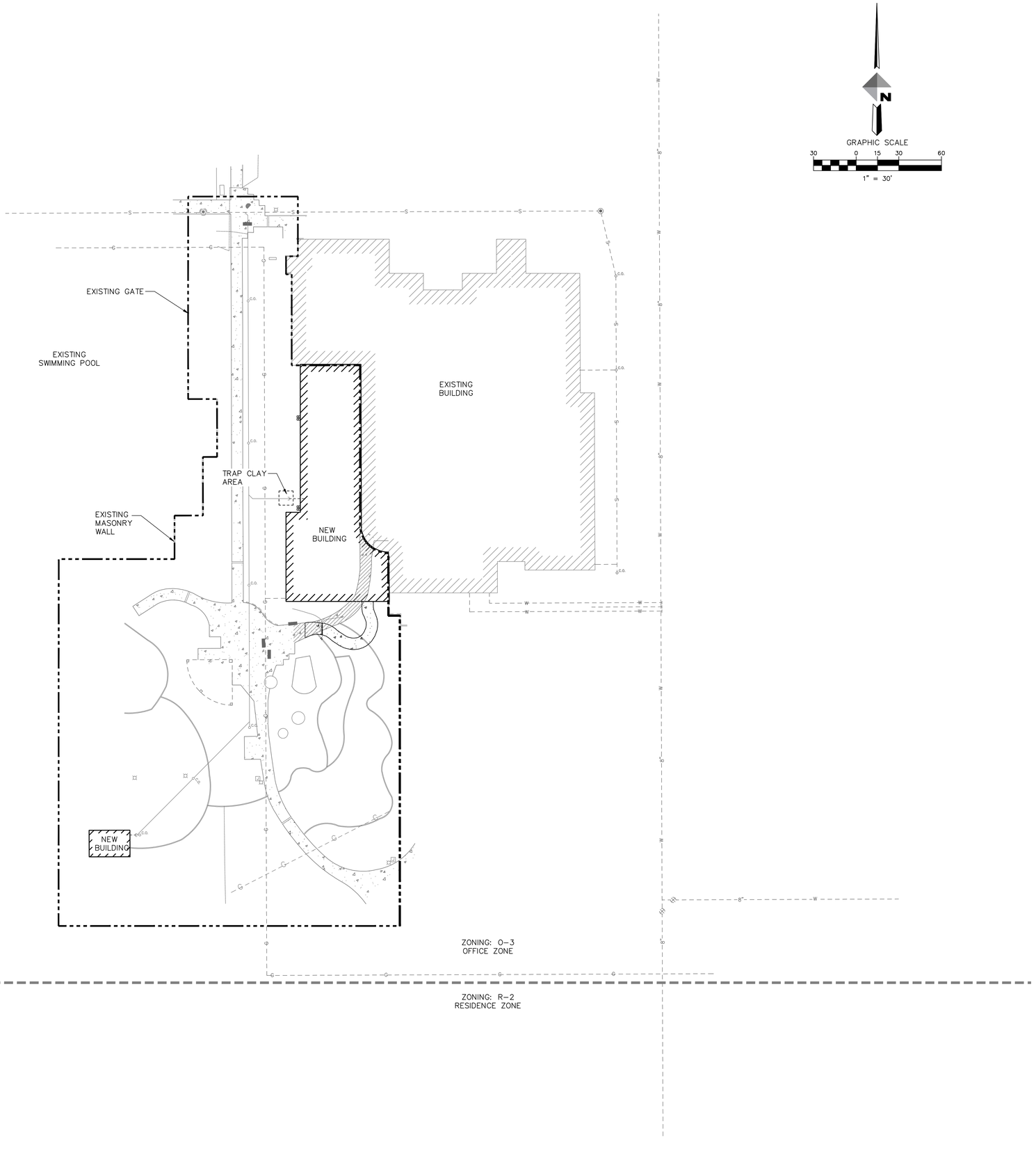

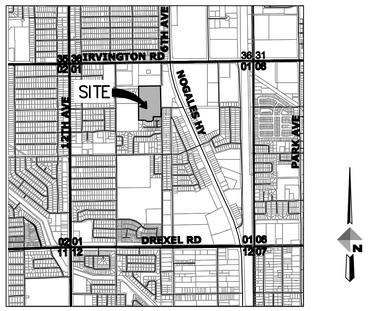

LOCATION MAP

SCALE: 3" = 1 MILE
LOCATED WITHIN THE NW 1/4, SEC 01, T15S, R13E, G&SRM, PIMA COUNTY, ARIZONA

GENERAL NOTES

1. ZONING/AREA: ZONING FOR SUBJECT PROPERTY IS O-3. THE TOTAL AREA OF THE PROJECT IS APPROXIMATELY 1.98 ACRES.
2. DUST CONTROL: ALL DISTURBED, GRADED OR BLADED AREAS NOT OTHERWISE IMPROVED SHALL BE TREATED WITH DECOMPOSED GRANITE 2" THICK TO REDUCE DUST POLLUTION COLOR AND SIZE TO MATCH EXISTING. ALL LANDSCAPE AND OPEN AREAS, AREAS BETWEEN THE PROPERTY LINE AND THE SIDEWALK AND AREAS BETWEEN THE SIDEWALK AND THE STREET CURB MUST RECEIVE DECOMPOSED GRANITE AT A 2" DEPTH. GROUND SURFACES IN PLANTING BEDS, PLANTERS, MEDIANS, OR TREE UNDER STORY WITHIN A LANDSCAPE AREA THAT ARE NOT COVERED WITH VEGETATION SHALL BE TREATED WITH THE SAME INORGANIC GROUND COVER EXCEPT AS NOTED ON THE PLANS. ALL COMMON AREAS SHOWN ON PLAN SHOULD BE TREATED AS MENTIONED. PEA GRAVEL SHOULD NOT BE USED IN FLOW CHANNELS, NOR ON SIDE SLOPES STEEPER THAN 4:1.
3. FINISH GRADING: FINISH GRADING OF THE LANDSCAPE AREAS AROUND THE BASE OF EACH TREE AND SHRUB SHALL BE DEPRESSED FROM EXISTING GROUND LEVEL 6" TO ENHANCE MOISTURE STORAGE FOR THE PLANT.
4. WATER HARVESTING: A SIMULATED ROCK BOTTOM STREAM & POOL SYSTEM, WITH 6" DEPRESSIONS WILL ASSIST IN WATER-HARVESTING. THESE AREAS WILL RECEIVE ROOF RUN-OFF FROM ROOF DRAINS IN ADDITION TO SURFACE RUN-OFF.
5. IRRIGATION: THE LANDSCAPE WILL BE IRRIGATED BY A PERMANENT UNDERGROUND DRIP IRRIGATION SYSTEM OPERATED BY AUTOMATIC CONTROLLER. (SEE IRRIGATION PLAN & DETAILS. SHEETS L-4, & L-5).
6. MAINTENANCE: ALL REQUIRED LANDSCAPING, IRRIGATION SYSTEMS, WALLS, SCREENING DEVICES, AND CURBING LANDSCAPE IMPROVEMENTS ON THE SITE OR WITHIN THE ABUTTING RIGHT-OF-WAY SHALL BE MAINTAINED AS SHOWN ON APPROVED PLANS.
7. NPPO: A NATIVE PLANT PRESERVATION PLAN WAS PREPARED FOR THIS PROJECT. SEE SHEET L-1.
8. STREET LANDSCAPE BORDER COVERAGE: THERE ARE NO STREET LANDSCAPE BORDERS ASSOCIATED WITH THIS PROJECT.

SHEET INDEX

SHEET #	DESCRIPTION
L-0	COVER
L-1	NATIVE PLANT PRESERVATION PLAN
L-2	PLANTING PLAN AND DETAILS
L-3	IRRIGATION PLAN AND DETAILS

LEGEND

PROJECT LIMITS
ZONING LINE

GRESHAM & BEACH
ARCHITECTS INC.
177 NORTH CHURCH AVENUE
SUITE 755
TUCSON, ARIZONA 85701
TEL.520.882.0698
FAX.520.882.0989

95% REVIEW SET
NOT FOR CONSTRUCTION

CITY OF TUCSON
FACILITIES DESIGN & MANAGEMENT DIVISION
EL PUEBLO ACTIVITY CENTER
5100 S. MISSIONDALE RD.
TUCSON, AZ

REVISIONS

Number	Date	By

Designed	DGM/SRL
Drawn	YAO
Checked	SRL
Date	14 APR 09
Job Number	27010.00

L-0
COVER

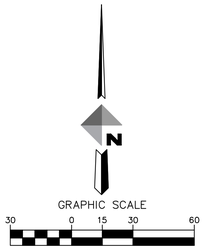

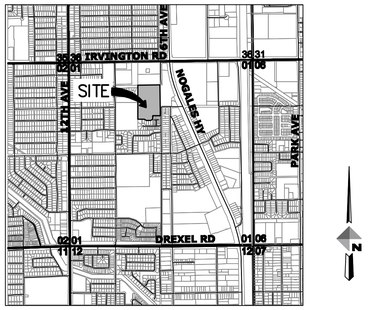

LOCATION MAP

SCALE: 3" = 1 MILE
LOCATED WITHIN THE NW 1/4, SEC 01, T15S, R13E,
G&SRM, PIMA COUNTY, ARIZONA

SALVAGE AND MITIGATION NOTES

1. AREA AND ZONING: THE TOTAL AREA OF THE PROJECT SITE IS APPROXIMATELY 1.98 ACRES. ZONING FOR THE SUBJECT PROPERTY IS O-3 (OFFICE ZONE).
2. METHODOLOGY: THIS NATIVE PLANT PRESERVATION ORDINANCE (NPPO) PLAN UTILIZES THE CITY OF TUCSON "PLANT INVENTORY METHODOLOGY."
3. GRADING: ALL SALVAGE WORK SHALL BE DONE PRIOR TO GRADING OF THE SITE.
4. TRANSPLANTING AND WATERING: A LICENSED CONTRACTOR SHALL PERFORM ALL SALVAGE AND TRANSPLANTING. TRANSPLANTING WILL BE PERFORMED BY TREE-SPADING AND WATER TRUCKS SHALL PROVIDE WATER TO TRANSPLANTED PLANTS UNTIL PERMANENT LINES ARE IN PLACE PER LANDSCAPE PLANS.
5. TEMPORARY HOLDING NURSERY: ALL TRANSPLANTED PLANTS WILL BE TRANSPLANTED TO THEIR PERMANENT LOCATION. NO TEMPORARY HOLDING NURSERY AREA WILL BE UTILIZED.
6. INJURED PLANTS: ANY PLANTS THAT DO NOT SURVIVE THE SALVAGE PROCESS SHALL BE REPLACED ON A ONE-TO-ONE BASIS (SAME SIZE AND SPECIES).
7. FLAGGING AND TAGGING: ALL VIABLE PROTECTED NATIVE PLANTS MUST BE TAGGED WITH AN EMBOSSED METAL TAG BEARING THE INVENTORY NUMBER. TAGGING MUST ALSO REMAIN IN PLACE FOR THE DURATION OF CONSTRUCTION. COLOR-CODED FLAGGING ON PLANTS CONTAINS A NUMBER THAT CORRESPONDS TO THE INVENTORY LIST (SEE BELOW).
   BLUE: TRANSPLANT ON-SITE
   WHITE: PRESERVE IN PLACE
   YELLOW: REMOVE FROM SITE
   FLAGGING AND TAGGING WILL BE MAINTAINED IN PLACE UNTIL FINAL INSPECTION.
8. MITIGATION PLANTS: ALL REPLACEMENT PLANTS USED TO SATISFY MITIGATION REQUIREMENTS SHALL BE AT LEAST 15 GALLON CONTAINERS FOR PALO VERDES AND MESQUITES. THE REPLACEMENT PLANTS SHALL BE PLANTED IN LOCATIONS ABLE TO SUPPORT THEIR LONG-TERM HEALTH AND SURVIVAL AND IN DENSITIES AND CONFIGURATIONS TO APPROXIMATE THE NATURAL CHARACTER OF THE SONORAN DESERT.
9. INSPECTION: THIS PROJECT REQUIRES A PRE-PERMIT INSPECTION PRIOR TO ANY SITE DISTURBANCE. THE CONTRACTOR/OWNER SHALL CALL FOR THE INSPECTION.
10. MONITORING: THE DEVELOPER WILL PROVIDE ON-SITE MONITORING TO BE PERFORMED PER GUIDELINES SET FORTH BY THE CITY OF TUCSON. COPIES OF THE MONITORING REPORTS SHALL BE PROVIDED TO THE LANDSCAPE ARCHITECT, CITY OF TUCSON DEVELOPMENT SERVICES DEPARTMENT.
11. ENDANGERED SPECIES ACT: THE PRESERVATION PLAN SHALL ALSO BE IN CONFORMANCE WITH THE FEDERAL ENDANGERED SPECIES ACT AND ARIZONA NATIVE PLANT LAW. THERE ARE NO FEDERAL ENDANGERED PLANT SPECIES OR STATE OF ARIZONA SAFEGUARDED PLANTS PRESENT WITHIN THE PROJECT LIMITS.
12. FENCING: EXISTING PLANTS TO BE PRESERVED IN PLACE AND AREAS DESIGNATED TO REMAIN UNDISTURBED SHALL BE FENCED PRIOR TO CONSTRUCTION PER CITY OF TUCSON DEVELOPMENT STANDARD 2-15.6. THE AREA TO BE FENCED SHALL BE BEYOND THE DRIP-LINE OF THE VEGETATION BY ONE-HALF (½) THE DISTANCE OF THE DRIP-LINE RADIUS. FOR SAGUAROS AND CACTI, THE AREA TO BE FENCED SHALL BE EQUAL TO THE DISTANCE OF ONE-HALF (½) THE HEIGHT OF THE PLANT. THE PRESERVATION OF A SUBSTANTIAL PORTION OF THE ROOT SYSTEM FOR EITHER UNDISTURBED NATURAL DESERT AREAS OF PROTECTED NATIVE PLANTS OR INDIVIDUAL PROTECTED NATIVE PLANTS PRESERVED IN PLACE WILL IMPROVE THE SURVIVAL RATE AND HEALTH OF THESE PLANTS AS WELL AS PRESERVE A PORTION OF THEIR ASSOCIATED PLANT COMMUNITY. NO PLANTS SHALL BE SALVAGED FROM WITHIN FENCED AREAS.
    A HIGHLY VISIBLE FENCE OR AT A MINIMUM A HIGHLY VISIBLE ROPE SHOULD BE PLACED SURROUNDING THE AREA WITH THE FOLLOWING SPECIFICATIONS:
    POSTS: AT LEAST 66" HIGH, T-POST (1.33G)
    ROPE: ⅜" HIGH VISIBILITY ROPE
    DISTANCE BETWEEN FENCE POSTS: 50' MAXIMUM
    DISTANCE BETWEEN ROPE AND GROUND: 4' MINIMUM
    DRIVE POSTS AT LEAST 1' INTO THE GROUND
    RED FLAGS EVERY 50'

NATIVE PLANT INVENTORY

ID NO.	BOTANICAL NAME	COMMON NAME	CALIPER (INCHES)	MULTI TRUNK	HEIGHT (FEET)	IN SITU VIABILITY	IN SITU NOTES	TRANSPLANT RATING	TRANSPLANT NOTES	DISPOSITION	DISPOSITION NOTES
1	Chilopsis linearis	DESERT WILLOW	7"	N	15'	HIGH	HEALTHY. SOME SPROUTS NEAR BASE NEED TRIMMING.	HIGH		PIP	
2	Parkinsonia florida	BLUE PALO VERDE	8"	N	15'	HIGH	VERY HEALTHY.	HIGH	NO INTERFERENCE FROM TREES OR BUILDING.	TOS	TRANSPLANT ELSEWHERE ON SITE.
3	Chilopsis linearis	DESERT WILLOW	4"	N	8'	LOW	NOT IN GOOD SHAPE. MANY SPROUTS OUT SIDE OF TRUNK. ONE SIDED GROWTH. LEAF DIE BACK AND DEAD PODS.	HIGH	UNHEALTHY.	TOS	
4	Chilopsis linearis	DESERT WILLOW	10"	N	15'	HIGH	VERY CURVED TRUCK. CLOSE TO BUILDING AND SWALE. SIGNIFICANT PRUNING.	MOD	PROXIMITY TO BUILDING AND CURVED TRUNK.	TOS	

INVENTORY TOTALS

TREES	QTY.	TOTAL VIABLE	PIP	TOS	MIT	REQUIRED PIP/TOS	%	PROVIDED PIP/TOS	%
Chilopsis linearis	3	3	1	2	0	1	30%	3	100%
Parkinsonia florida	1	1	0	1	0	1	30%	1	100%

PIP CREDIT CALCULATIONS

	SIZE RATIO	SAGUARO 6'-10' H 2:1	SAGUARO >10' H 3:1	OTHER CACTI ≥ 2' H/D 2:1	IRONWOOD 6-12" C 2:1	IRONWOOD >12" C 3:1	OTHER TREES 6-14" C 2:1	OTHER TREES >14" C 4:1	OCOTILLO ≥ 6'H 2:1	YUCCAS ≥ 4' H/D 2:1	SHRUBS ≥ 6' H 2:1	TOTAL CREDITS
TREES												
Chilopsis linearis							1					2
SHRUBS												
CACTI												
SUCCULENTS												

MITIGATION CALCULATIONS

	TOS	SUPPLEMENTS (VARIES)	MITIGATION (MIT)	RFS	REPLACEMENT (VARIES)	PIP CREDITS	NET MITIGATION	SIZE
TREES								
Chilopsis linearis	2	4	0	0	0	2	2	15-GAL
Parkinsonia florida	1	2	0	0	0	0	2	15-GAL

LEGEND

PROJECT LIMITS

INVENTORIED NATIVE PLANTS

② PRESERVE IN PLACE (PIP)

③ TRANSPLANT ON SITE (TOS)

④ REMOVE FROM SITE (RFS)

GRESHAM & BEACH
ARCHITECTS INC.
177 NORTH CHURCH AVENUE
SUITE 255
TUCSON, ARIZONA 85701
TEL.520.882.0698
FAX.520.882.0989

95% REVIEW SET
NOT FOR CONSTRUCTION

CITY OF TUCSON
FACILITIES DESIGN & MANAGEMENT DIVISION

EL PUEBLO ACTIVITY CENTER

5100 S. MISSIONDALE RD.
TUCSON, AZ

REVISIONS

Number	Date	By

Designed	DGM/SRL
Drawn	YAO
Checked	SRL
Date	14 APR 09
Job Number	27010.00

L-1
NATIVE PLANT PRESERVATION PLAN

T:\02 Civil Engineering\27#####A El Pueblo Activity Center Landscaping\27#####-NPPO.dwg, NPPO

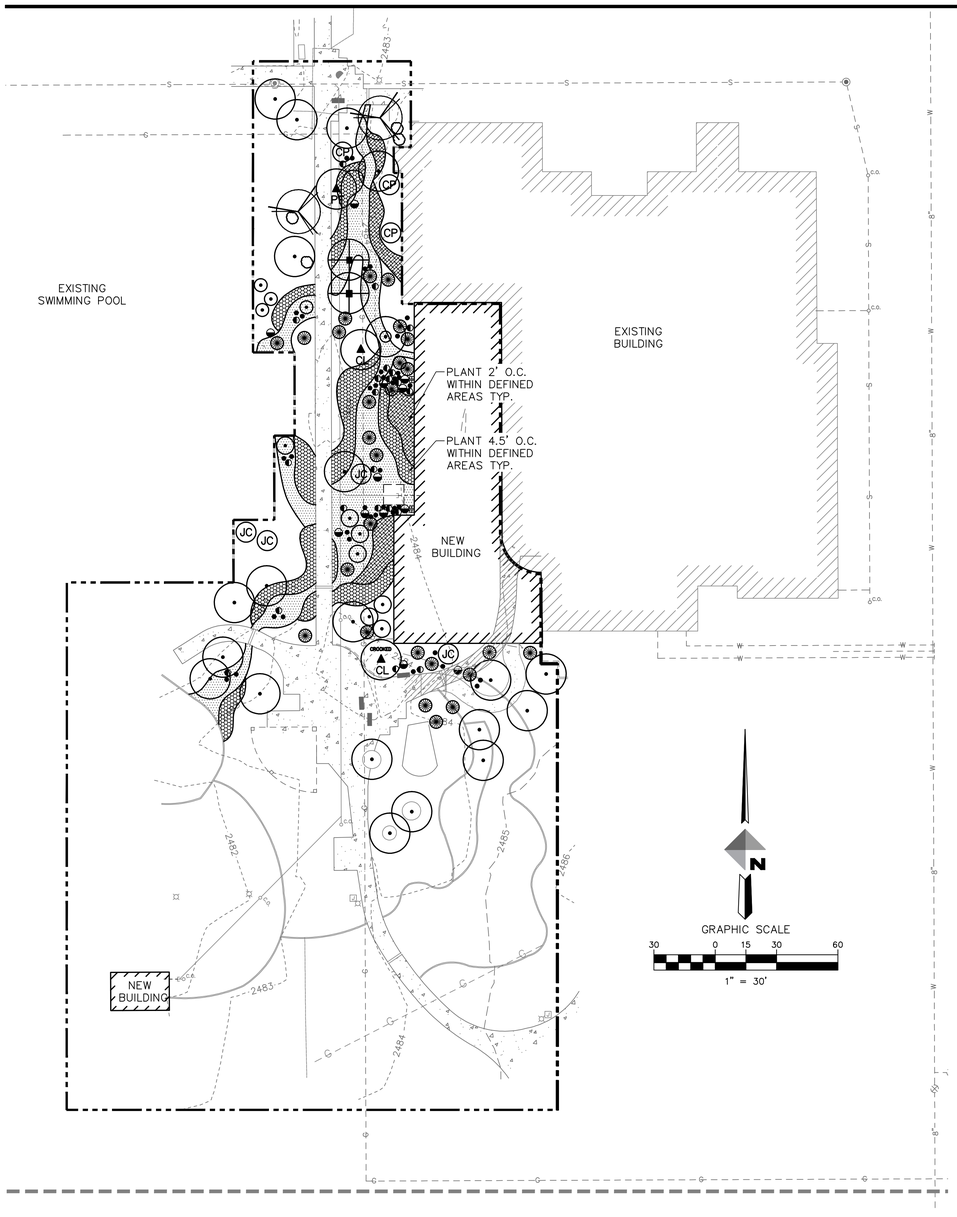

PLANT LEGEND

	BOTANICAL NAME	COMMON NAME	QTY	SIZE
	TREES			
CL	Chilopsis linearis	DESERT WILLOW	2	TRANSPLANTS (PER NPPO)
PF	Parkinsonia florida	BLUE PALO VERDE	1	TRANSPLANT (PER NPPO)
	Parkinsonia florida	BLUE PALO VERDE	2	15-GAL (PER NPPO)
	Chilopsis linears	DESERT WILLOW	2	15-GAL (PER NPPO)
	SHRUBS			
JC	Justicia californica	CHUPAROSA	4	5-GAL
CP	Calliandra californica	BAJA FAIRY DUSTER	3	5-GAL
	SUCCULENTS			
	Nolina microcarpa	BEARGRASS	12	5-GAL
	Herperaloe parviflora	RED YUCCA	26	5-GAL
	GROUND COVER			
	Dalea greggii	TRAILING INDIGO BUSH	40	1-GAL
	Verbena gooddingii	GOODDING-VERBENA	56	1-GAL
	BOULDER WEATHERED CATALINA GNEISS 4'		12	
	BOULDER WEATHERED CATALINA GNEISS 3'		21	
	BOULDER WEATHERED CATALINA GNEISS 2'		38	
	DECOMPOSED GRANITE 2" DEPTH SEE GENERAL NOTE #2 ON SHEET L-0			7,553 SF.
	GRAVEL MULCH WEATHERED CATALINA GNEISS ¾"-2", 4" DEPTH			3,396 SF.

LEGEND

- PROJECT LIMITS
- ZONING LINE
- TRANSPLANT ON SITE
- PRESERVE IN PLACE
- EXISTING TREE
- EXISTING SHRUB

NOTE: • 15 GAL AND 24" BOX (SMALL CALIPER) TO HAVE DOUBLE TIES BETWEEN STAKES. 24" AND LARGER TO HAVE SINGLE TIE BETWEEN STAKES.
• MULTI-TRUNKED TREES TO HAVE ALL MAJOR LEADERS STAKED OR SUPPORTED. ALL WIRE TO WRAP A MIN. OF 5 TIMES AROUND ITSELF

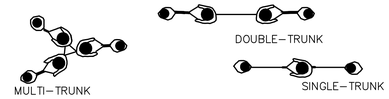

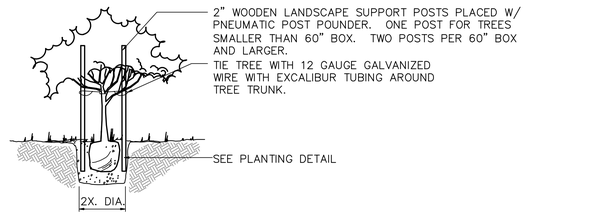

1 TYPICAL STAKING DETAIL
N.T.S.

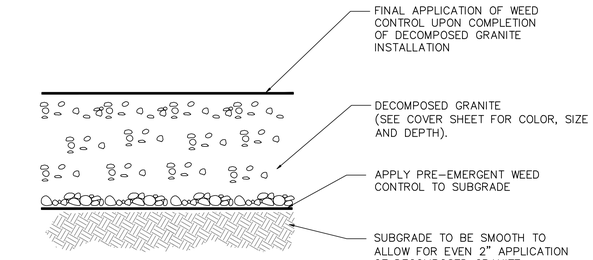

2 DECOMPOSED GRANITE
N.T.S.

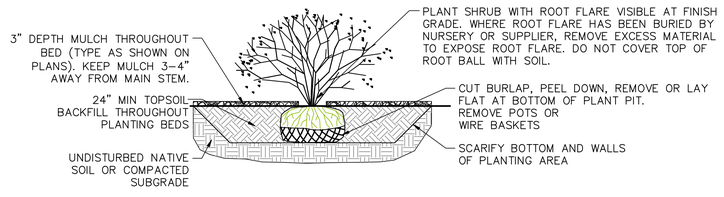

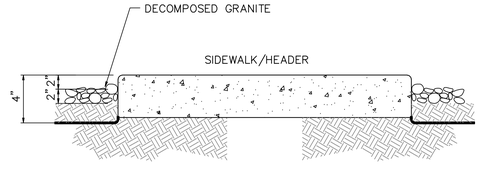

NOTE: FINISH GRADE TO BE 7" BELOW TOP OF WALK BEFORE INSTALLATION OF DECOMPOSED GRANITE

3 GRADING AT WALKS/HEADERS
N.T.S.

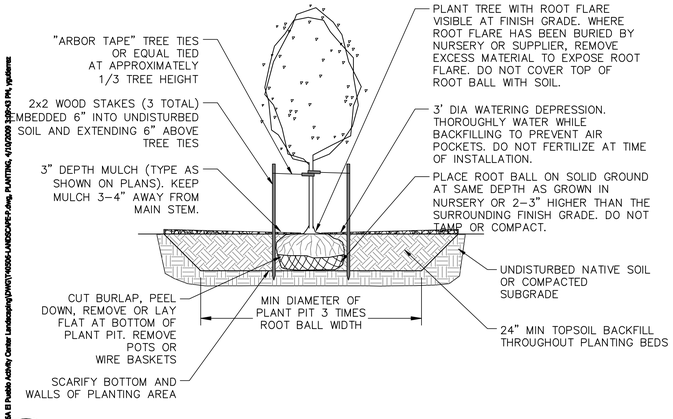

7 TREE PLANTING
N.T.S.

5 SHRUB PLANTING
N.T.S.

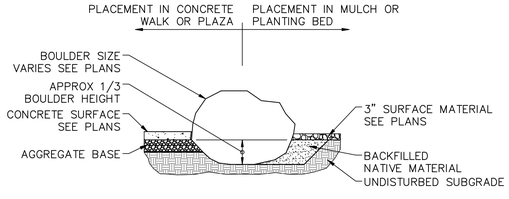

NOTES:

1. BOULDER SHALL BE PLACED TO CONVEY NATURAL APPEARANCE. GENERALLY BURYING APPROXIMATELY 1/3 OF THE BOULDER WILL ACHIEVE THAT AFFECT.
2. DEPTH OF EXCAVATION SHALL ACCOMMODATE BOULDER SIZE.
3. PLACEMENT OF BOULDERS SHALL BE FIELD VERIFIED BY PROJECT LANDSCAPE ARCHITECT.

6 GRADING AT WALKS/HEADERS
N.T.S.

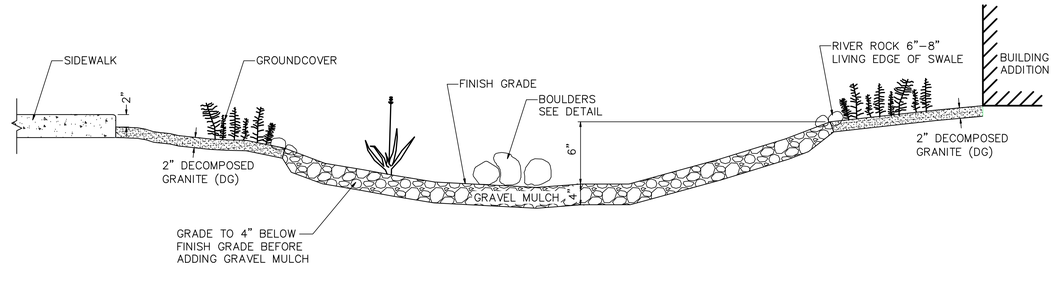

4 SIMULATED ROCK BOTTOM STREAM DETAIL
N.T.S.

GRESHAM BEACH ARCHITECTS INC.
177 NORTH CHURCH AVENUE
SUITE 255
TUCSON, ARIZONA 85701
TEL.520.882.0698
FAX.520.882.0988

95% REVIEW SET
NOT FOR CONSTRUCTION

CITY OF TUCSON
FACILITIES DESIGN & MANAGEMENT DIVISION
EL PUEBLO ACTIVITY CENTER
5100 S. MISSIONDALE RD.
TUCSON, AZ

REVISIONS		
Number	Date	By

Designed	DGM/SRL
Drawn	YAO
Checked	SRL
Date	14 APR 09
Job Number	27010.00

L-2
PLANTING PLAN AND DETAILS

T:\22 Civil Engineering\27000s\27010 El Pueblo ADMIN Center Landscaping\DWG\27010SS-LANDSCAPE-P.dwg, PLANTING, 4/10/2009 3:09:43 PM, ygutierrez

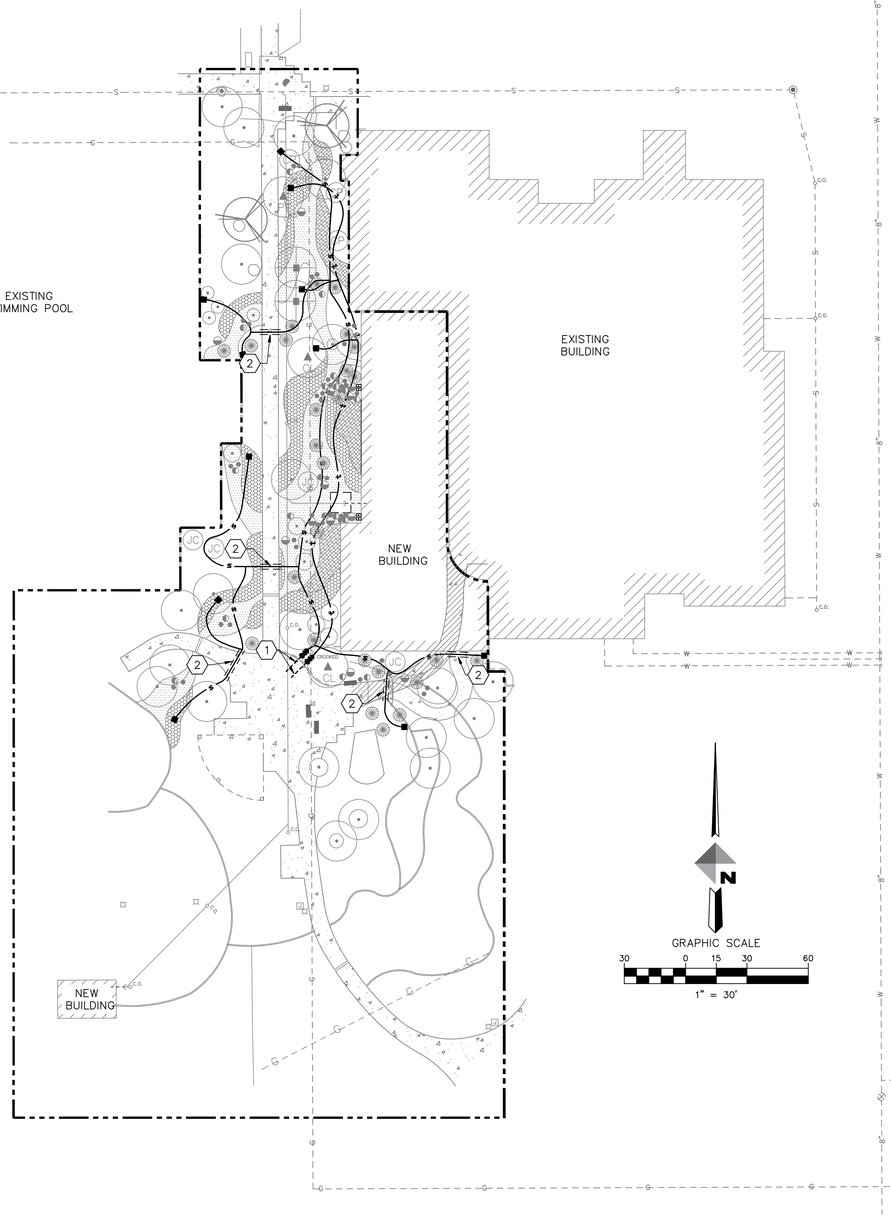

IRRIGATION NOTES

1. IRRIGATION PLANS ARE SCHEMATIC. ALL IRRIGATION EQUIPMENT SHALL BE LOCATED WITHIN LANDSCAPE AREAS AND WITHIN PROPERTY BOUNDARIES. CONTRACTOR IS RESPONSIBLE FOR 100% COVERAGE TO ALL PLANT MATERIAL. VALVES SHOWN WITHIN SWALES, RIGHT OF WAYS OR WITHIN LOTS ARE FOR DRAWING CLARITY. FINAL LOCATION OF THE CONTROLLER WILL BE APPROVED BY OWNER/LANDSCAPE ARCHITECT.
2. IRRIGATION EQUIPMENT TO BE APPROVED BY OWNER OR OWNER'S REPRESENTATIVE PRIOR TO INSTALLATION.
3. SLEEVES SHALL BE INSTALLED UNDER PAVING OR SIDEWALK AREAS AS INDICATED ON PLAN. SLEEVES TO EXTEND A MINIMUM OF 12" BEYOND EDGE OF PAVING OR CURB UNLESS SPACE DOES NOT PERMIT. ENDS OF SLEEVES SHALL BE TAPED SHUT TO PREVENT DIRT FROM BLOCKING SLEEVE. ENDS SHALL BE MARKED BY WIRE FLAG EXTENDING ABOVE GROUND ATTACHED TO END OF SLEEVE.
4. MAXIMUM LENGTH OF DISTRIBUTION TUBING: 8'0"
5. THE POLY-LINE SHALL BE LOCATED TO ENSURE THE MAXIMUM LENGTH OF DISTRIBUTION TUBING IS NOT EXCEEDED.
6. IRRIGATION SYSTEM IS DESIGNED FOR AVAILABLE STATIC PRESSURE OF 90 PSI. CONTRACTOR TO VERIFY PRESSURE PRIOR TO INSTALLATION AND REPORT ANY DIFFERENCES TO THE OWNER OR OWNER'S REPRESENTATIVE.
7. THESE PLANS ARE FOR APPROVAL PURPOSES ONLY. THESE PLANS ARE NOT CONSTRUCTION DOCUMENTS.
8. THESE PLANS ASSUME THAT ALL IRRIGATION WILL BE CONTROLLED BY ONE MASTER CONTROLLER.
9. STANDARD DETAILS TO BE USED: GATE VALVE: COT/PC STD DTL 401; QUICK COUPLER: COT/PC STD DTL 402; ELECTRIC/REMOTE CONTROL VALVE: COT/PC STD DTL 403; EMITTER LINE FLUSH: COT/PC STD DTL 407; TRENCHING: COT/PC STD DTL 400.
10. IRRIGATION LINES FOR NEW PLANTINGS WILL BE TIED INTO EXISTING IRRIGATION MAINLINE. NEW CONTROL VALVE ASSEMBLIES WILL BE INSTALLED TO ADDRESS WATER REQUIREMENTS OF THE NEW PLANTS, AND CONNECTED TO EXISTING CONTROLLER.

IRRIGATION EQUIPMENT SCHEDULE

- 1" MAINLINE SCHEDULE 40 PVC. (ASSUMED LOCATION, CONTRACTOR TO VERIFY
- EMITTER LATERAL POLYETHYLENE HARDIE DURA POL BLUE STRIPE –3/4" UNLESS OTHERWISE NOTED ON PLANS.
- SLEEVES
  40 PVC – INSTALL UNDER PAVING OR SIDEWALK, MIN 2 SIZES LARGER THAN LINE SIZE. (OR USE EXISTING SLEEVE. CONTRACTOR TO VERIFY).
- EMITTER ACCESS SLEEVE (NOT SHOWN)
  RAINBIRD SEB–6 FOR MULTI–OUT EMITTERS AND FLUSH CAP ASSEMBLIES
- EMITTERS
  SHRUBS: MULTI–OUTLET EMITTERS
  RAINBIRD XERI–BUG EMISSION DEVICE – XB–10–6 (BARB INLET) WITH ¼" DIST. TUBING
  TREES: MULTI–OUTLET EMITTERS
  RAINBIRD XERI–BUG EMISSION DEVICE – XB–10–6 (BARB INLET) WITH ¼" DIST. TUBING
- EMITTER SCHEDULE:
  TREES: 1 MULTI OUTLET EMITTER (XERIBUG XB–10–6)/PLANT
  SHRUBS: 1 MULTI OUTLET EMITTER (XERI–BUG XB–10–6)/4–5 PLANTS
- EMITTER LINE FLUSH CAP ASSEMBLY
  COMPRESSION OR THREADED FITTING W/HOSE THREADED CAP ASSEMBLY TO BE PLACED IN 6" ROUND BOX
- DRIP ZONE REMOTE CONTROL VALVE ASSEMBLY WITH PRESSURE REGULATING VALVE AND DRIP FILTER–RAINBIRD XCZ–100 COM (OR OTHER APPROVED EQUAL TO WORK WITH EXISTING CONTROLLER)
- REMOTE CONTROL VALVE RAINBIRD 100–PEB (OR OTHER APPROVED EQUAL TO WORK WITH EXISTING CONTROLLER)
- FILTER RAINBIRD RBY100CLSS W/ MESH FILTER ELEMENT SCZ100SS (OR OTHER APPROVED EQUAL TO WORK WITH EXISTING CONTROLLER)
- INLINE PRESSURE REDUCER RAINBIRD INSTALLED IN ROUND VALVE BOX (OR OTHER APPROVED EQUAL TO WORK WITH EXISTING CONTROLLER)

KEY NOTES

1. TIE INTO EXISTING IRRIGATION MAIN LINE.
2. SCHEDULE 40 PVC 4" SLEEVE UNDER EXISTING SIDEWALK OR USE EXISTING SLEEVE.

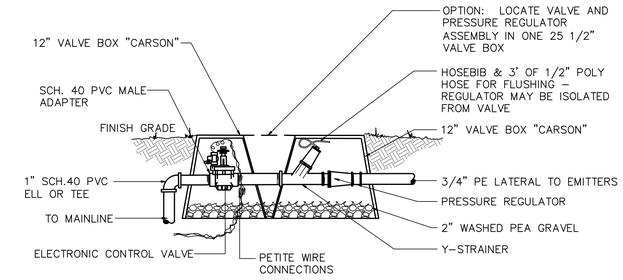

AS PER DETAIL:
- ALL FITTINGS TO BE 3/4" POLYETHELENE
- ADJUST PRESSURE REGULATOR FOR PROPER FLOW TO EMITTERS. PRESSURE IN LATERAL SHOULD NOT EXCEED 30 PSI.
- ALL WIRING TO BE INSTALLED AS PER LOCAL CODE: TAPE & BUNDLE WIRE EVERY 10': PROVIDE 2' EXPANSION CELLS AT EACH WIRE CONNECTION IN VALVE BOX.

1 Y-STRAINER/PRESSURE REGULATOR
N.T.S.

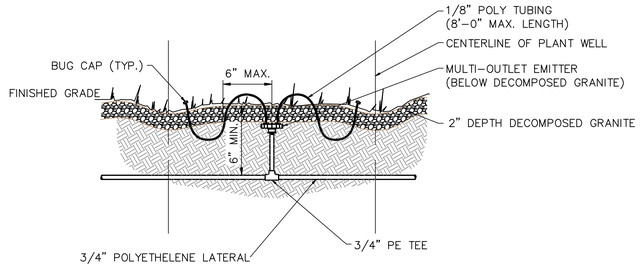

2 MULTI-OUTLET EMITTER (SHRUBS ONLY)
N.T.S.

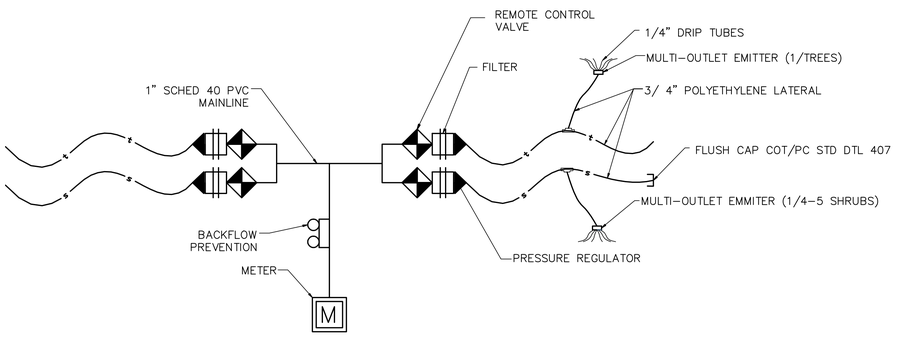

4 EMITTER & LATERAL LAYOUT
N.T.S.

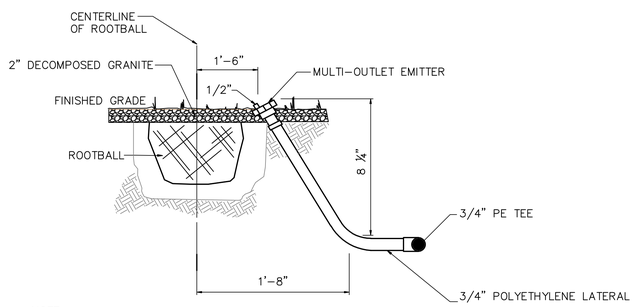

NOTE:
- EMISSION POINTS SHALL BE LOCATED UPHILL OF PLANT, THUS SUPPLYING WATER TO ROOTBALL.
- AT LEAST ONE EMITTER TUBE TO BE LOCATED WITHIN 4 INCHES OF PLANT CENTER LINE.
- THREE HOLES OPEN INITIALLY

3 MULTI-OUTLET EMITTER (TREES ONLY)
N.T.S.

GRESHAM BEACH
ARCHITECTS INC.
177 NORTH CHURCH AVENUE
SUITE 755
TUCSON, ARIZONA 85701
TEL.520.882.0698
FAX.520.882.0989

95% REVIEW SET
NOT FOR
CONSTRUCTION

CITY OF TUCSON
FACILITIES DESIGN & MANAGEMENT DIVISION
EL PUEBLO ACTIVITY CENTER
5100 S. MISSIONDALE RD.
TUCSON, AZ

REVISIONS		
Number	Date	By

Designed	DGM/SRL
Drawn	YAO
Checked	SRL
Date	14 APR 09
Job Number	27010.00

L-3
IRRIGATION PLAN AND DETAILS

T:\27010 City Engineering\27400004 El Pueblo Activity Center Landscaping\DWG\27400004-LANDSCAPE P.dwg, IRRIGATION, 4/16/2009 3:10:35 PM, ygutierrez

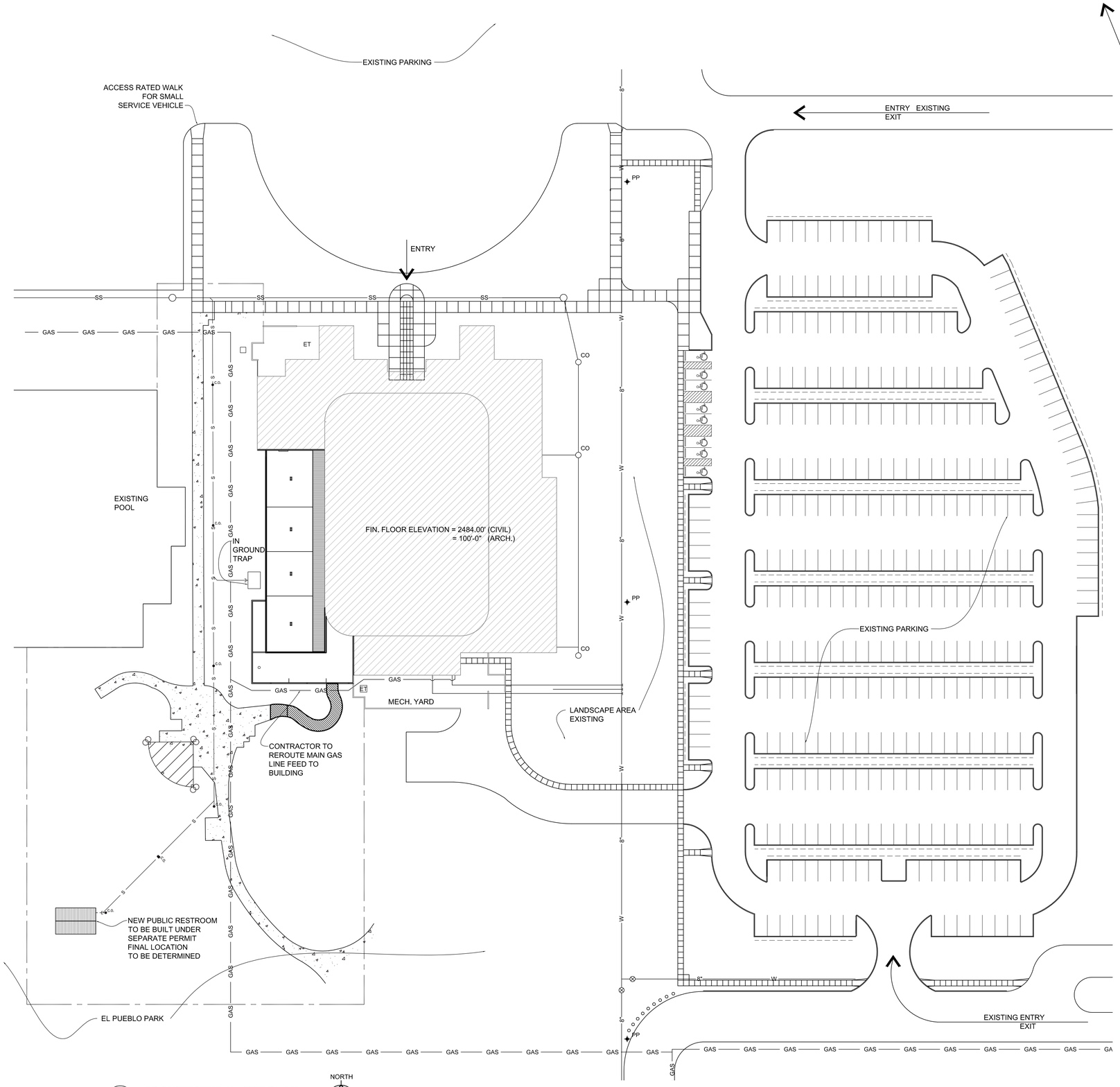

1 **ARCHITECTURAL SITE PLAN**
1" = 30'
0 15' 30' 60'

GENERAL NOTES

1. DIMENSIONS ARE TO FINISHED WALL FACE AND COLUMN CENTERLINE UNLESS NOTED OTHERWISE
2. REFER TO MECHANICAL AND ELECTRICAL DRAWINGS FOR EXTENT OF WORK
3. REFER TO CIVIL DRAWINGS FOR EXTENT OF WORK

LEGEND

- EXISTING SIDEWALK
- NEW ACCESSIBLE SIDEWALK
- SS — SS — EXISTING SEWER (TO BE VERIFIED BY SITE SURVEY)
- W — W — EXISTING WATER SUPPLY (TO BE VERIFIED BY SITE SURVEY)
- CO — EXISTING CLEANOUT
- EXISTING POWER POLE
- GAS — GAS — EXISTING GAS SUPPLY (TO BE VERIFIED BY SITE SURVEY)
- S — S — NEW SANITARY SEWER LINE
- ET — ELECTRICAL TRANSFORMER
- EXISTING BUILDING NOT INCLUDED IN NEW PROJECT
- PROJECT BOUNDRIES

GRESHAM BEACH ARCHITECTS INC.
177 NORTH CHURCH AVENUE
SUITE 755
TUCSON . ARIZONA . 85701
TEL.520.882.0698
FAX.520.882.0989

95% CONSTRUCTION DOCUMENTS NOT FOR CONSTRUCTION

CITY OF TUCSON
FACILITIES DESIGN & MANAGEMENT DIVISION

EL PUEBLO ACTIVITY CENTER

5100 S. MISSIONDALE RD.
TUCSON, AZ

REVISIONS

Number	Date	By

Designed	RAB/JC
Drawn	MLN
Checked	JC
Date	21 NOV 08
Job Number	27010.00

ARCHITECTURAL SITE PLAN

A0.1

OF

GENERAL NOTES

1. DIMENSIONS ARE TO FINISHED WALL FACE AND COLUMN CENTERLINE UNLESS NOTED OTHERWISE
2. REFER TO MECHANICAL AND ELECTRICAL DRAWINGS FOR EXTENT OF WORK
3. REFER TO INTERIOR ELEVATIONS FOR ADDITIONAL SCOPE OF WORK
4. REFER TO ROOM FINISH SCHEDULE FOR SPECIFIC SURFACE AND FINISH MATERIALS

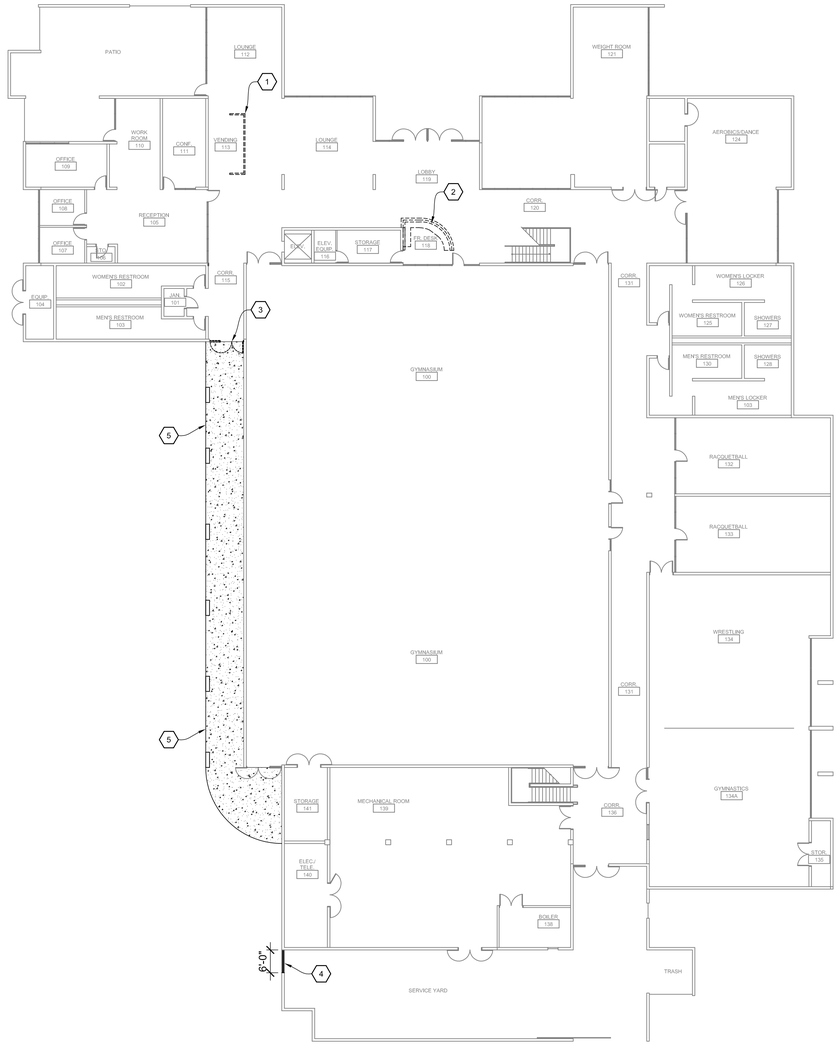

1 **DEMO PLAN** 1/16" = 1'-0"

NORTH

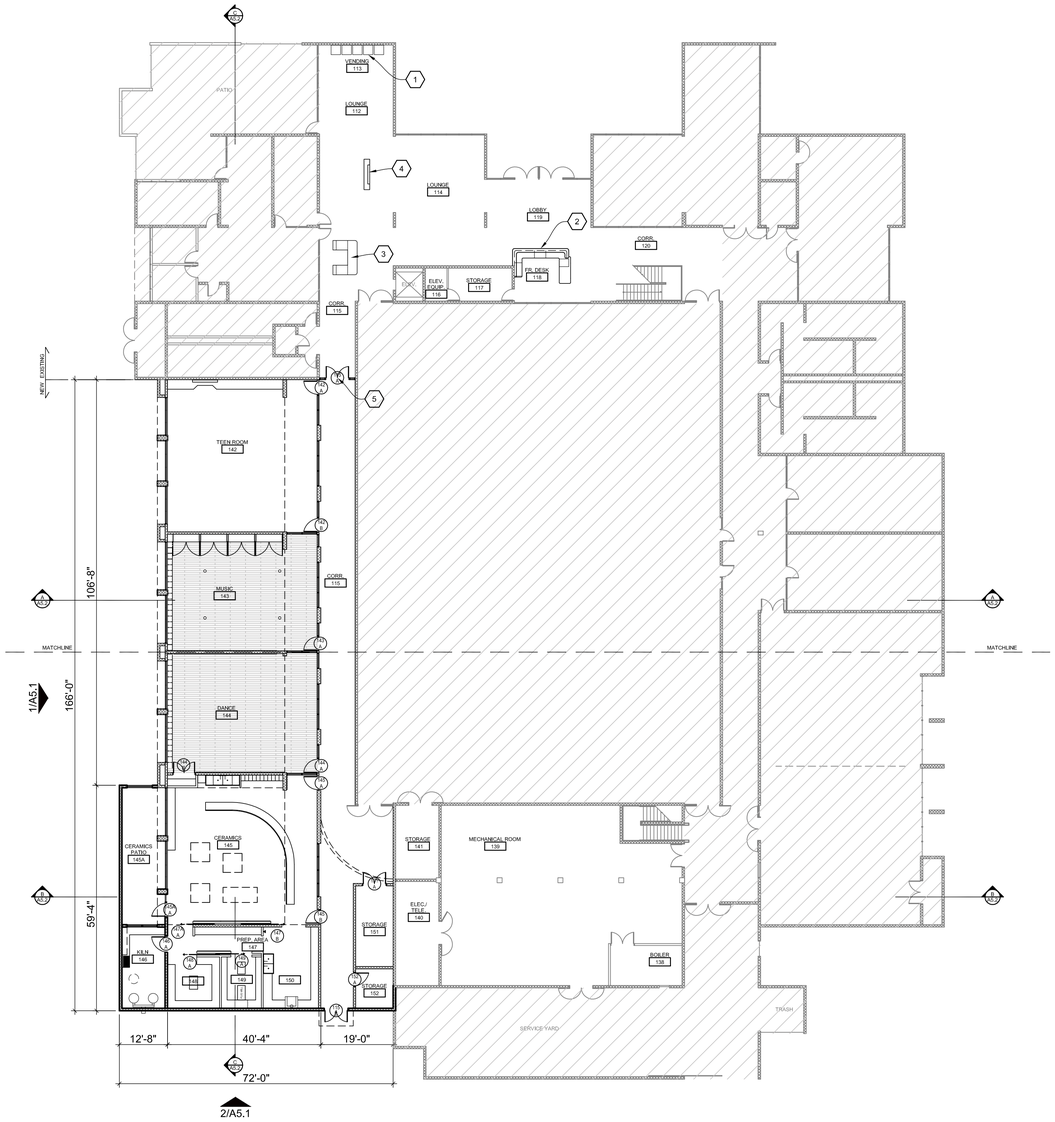

1 **COMPREHENSIVE FLOOR PLAN** 1/16" = 1'-0"

NORTH

DEMO NOTES

1. REMOVE EXISTING PARTIAL HEIGHT WALL @ VENDING MACHINES. VENDING MACHINES TO REMAIN & BE RELOCATED TO THE NORTH WALL OF LOUNGE 112.
2. REMOVE EXISTING DESK AND WALL STORAGE @ FRONT DESK 118. ALL COMMUNICATIONS AND ELECTRICAL SERVICES TO REMAIN
3. REMOVE EXISTING DOOR/ FRAME
4. REMOVE A 6'-0" LENGTH OF EXISTING 8'-0" HIGH WALL TO BE REPLACED W/ NEW MASONRY OF THE ADDITION.
5. REMOVE EXISTING CONCRETE WALK

FLOOR PLAN NOTES

1. NEW LOCATION OF VENDING MACHINES
2. NEW RECEPTION DESK W/ ADA ACCESSIBILITY
3. NEW DESK FOR SECURITY/ VISIBILITY IN NEW ADDITION
4. NEW TV CABINET
5. NEW DOOR @ LOCATION WHERE EXISTING DOOR WAS REMOVED
6. EXISTING BUILDING NOT IN ADDITION

GRESHAM BEACH ARCHITECTS INC.
177 NORTH CHURCH AVENUE
SUITE 755
TUCSON, ARIZONA. 85701
TEL.520.882.0698
FAX.520.882.0989

95% CONSTRUCTION DOCUMENTS NOT FOR CONSTRUCTION

CITY OF TUCSON
FACILITIES DESIGN & MANAGEMENT DIVISION

EL PUEBLO ACTIVITY CENTER

5100 S. MISSIONDALE RD.
TUCSON, AZ

REVISIONS

Number	Date	By

Designed	RAB/JC
Drawn	MLN
Checked	JC
Date	21 NOV 08
Job Number	27010.00

COMPRHENSIVE FLOOR PLAN/ DEMO PLAN

A1.0

OF

GENERAL NOTES

1. DIMENSIONS ARE TO FINISHED WALL FACE AND COLUMN CENTERLINE UNLESS NOTED OTHERWISE
2. REFER TO MECHANICAL AND ELECTRICAL DRAWINGS FOR EXTENT OF WORK
3. REFER TO INTERIOR ELEVATIONS FOR ADDITIONAL SCOPE OF WORK
4. REFER TO ROOM FINISH SCHEDULE FOR SPECIFIC SURFACE AND FINISH MATERIALS

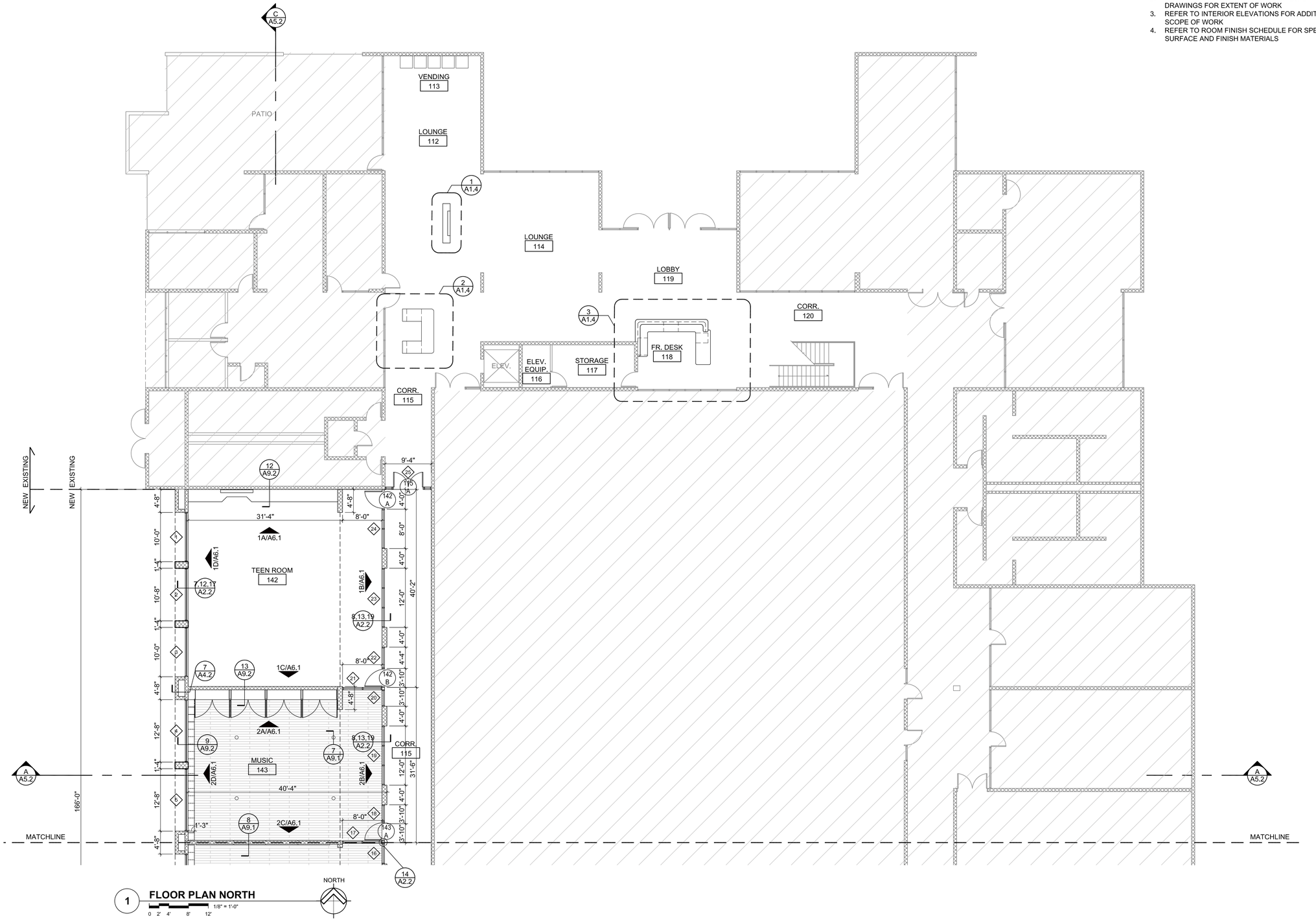

GRESHAM BEACH ARCHITECTS INC.
177 NORTH CHURCH AVENUE
SUITE 755
TUCSON, ARIZONA. 85701
TEL.520.882.0698
FAX.520.882.0989

95% CONSTRUCTION DOCUMENTS
NOT FOR CONSTRUCTION

CITY OF TUCSON
FACILITIES DESIGN & MANAGEMENT DIVISION

EL PUEBLO ACTIVITY CENTER

5100 S. MISSIONDALE RD.
TUCSON, AZ

REVISIONS

Number	Date	By

Designed	RAB/JC
Drawn	MLN
Checked	JC
Date	21 NOV 08
Job Number	27010.00

FLOOR PLAN NORTH

A1.1

OF

GENERAL NOTES

1. DIMENSIONS ARE TO FINISHED WALL FACE AND COLUMN CENTERLINE UNLESS NOTED OTHERWISE
2. REFER TO MECHANICAL AND ELECTRICAL DRAWINGS FOR EXTENT OF WORK
3. REFER TO INTERIOR ELEVATIONS FOR ADDITIONAL SCOPE OF WORK
4. REFER TO ROOM FINISH SCHEDULE FOR SPECIFIC SURFACE AND FINISH MATERIALS

KEYNOTES

NOTE: SEE ENLARGED PLAN 1/A1.3 FOR DETAIL AND DIMENSIONAL LAYOUT OF CERAMICS ROOM 145

1. CERAMICS FURNITURE SEE FURNITURE PLAN IA1.1 FOR LAYOUT AND TYPES

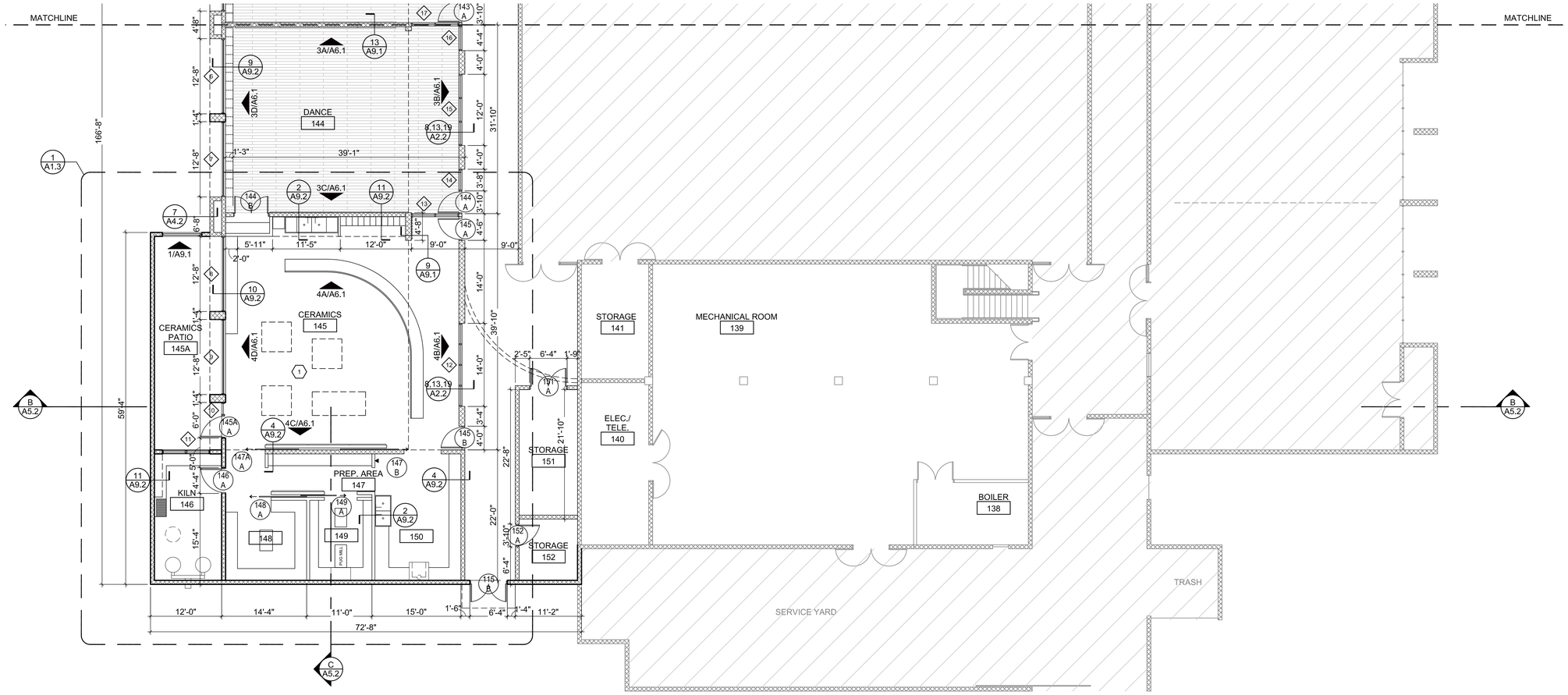

1 **FLOOR PLAN SOUTH**
1/8" = 1'-0"
0 2' 4' 8' 12'

GRESHAM BEACH ARCHITECTS INC.
177 NORTH CHURCH AVENUE
SUITE 755
TUCSON . ARIZONA . 85701
TEL.520.882.0698
FAX.520.882.0989

95% CONSTRUCTION DOCUMENTS NOT FOR CONSTRUCTION

CITY OF TUCSON
FACILITIES DESIGN & MANAGEMENT DIVISION
EL PUEBLO ACTIVITY CENTER
5100 S. MISSIONDALE RD.
TUCSON, AZ

REVISIONS

Number	Date	By

Designed	RAB/JC
Drawn	MLN
Checked	JC
Date	21 NOV 08
Job Number	27010.00

FLOOR PLAN SOUTH

A1.2

OF

GENERAL NOTES

1. DIMENSIONS ARE TO FINISHED WALL FACE AND COLUMN CENTERLINE UNLESS NOTED OTHERWISE
2. REFER TO MECHANICAL AND ELECTRICAL DRAWINGS FOR EXTENT OF WORK
3. REFER TO INTERIOR ELEVATIONS FOR ADDITIONAL SCOPE OF WORK
4. REFER TO ROOM FINISH SCHEDULE FOR SPECIFIC SURFACE AND FINISH MATERIALS

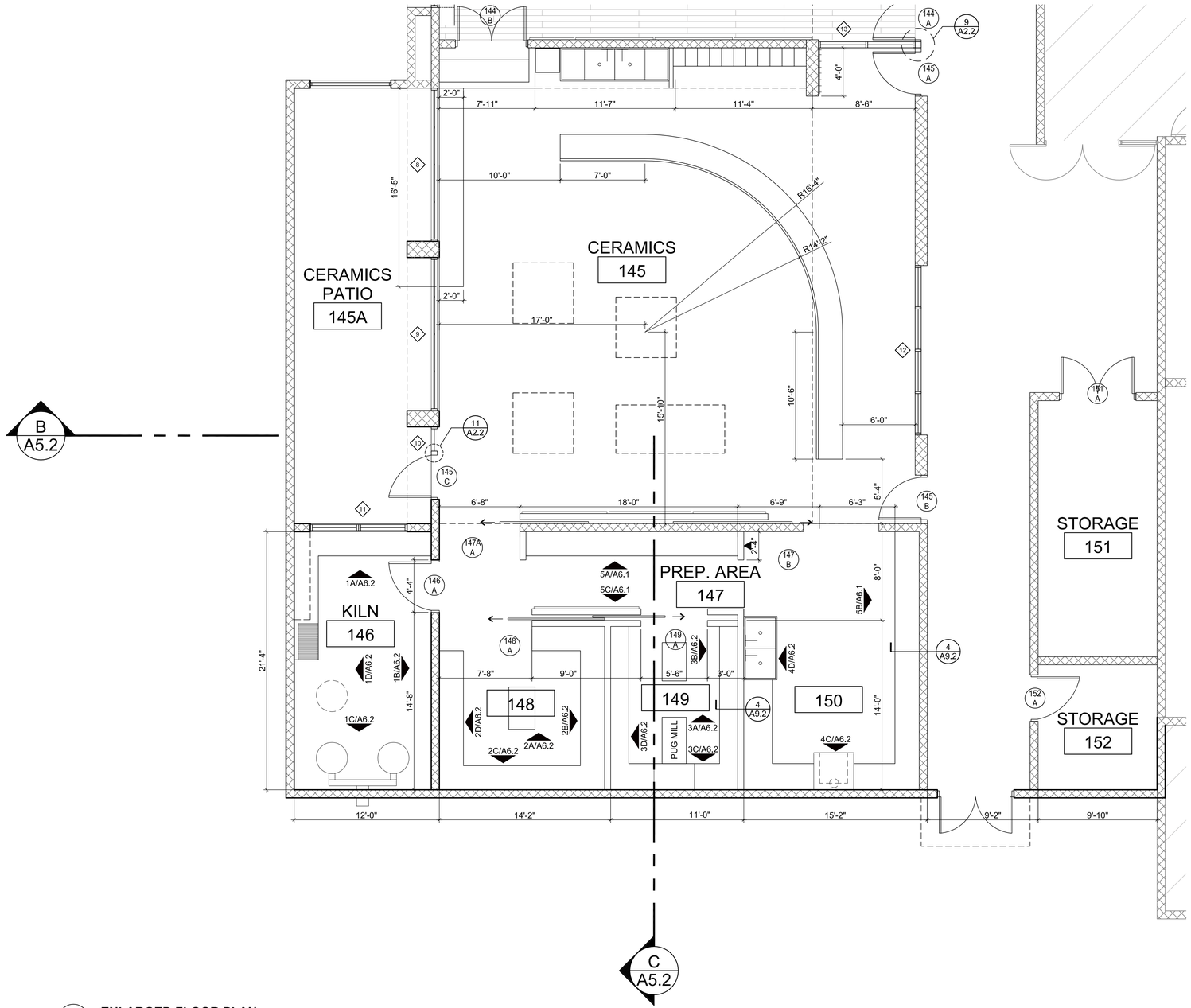

1 **ENLARGED FLOOR PLAN**

0 1' 2' 4' 6' 1/4" = 1'-0"

GRESHAM BEACH ARCHITECTS INC.
177 NORTH CHURCH AVENUE
SUITE 755
TUCSON . ARIZONA . 85701
TEL.520.882.0698
FAX.520.882.0989

95% CONSTRUCTION DOCUMENTS NOT FOR CONSTRUCTION

CITY OF TUCSON
FACILITIES DESIGN & MANAGEMENT DIVISION

EL PUEBLO ACTIVITY CENTER

5100 S. MISSIONDALE RD.
TUCSON, AZ

REVISIONS

Number	Date	By

Designed	RAB/JC
Drawn	MLN
Checked	JC
Date	21 NOV 08
Job Number	27010.00

ENLARGED FLOOR PLAN

A1.3

OF

GENERAL NOTES

1. DIMENSIONS ARE TO FINISHED WALL FACE AND COLUMN CENTERLINE UNLESS NOTED OTHERWISE
2. REFER TO MECHANICAL AND ELECTRICAL DRAWINGS FOR EXTENT OF WORK
3. REFER TO INTERIOR ELEVATIONS FOR ADDITIONAL SCOPE OF WORK
4. REFER TO ROOM FINISH SCHEDULE FOR SPECIFIC SURFACE AND FINISH MATERIALS

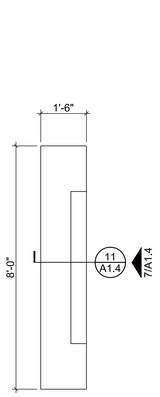

1 ENLARGED PLAN - TV

1/2"=1'-0"

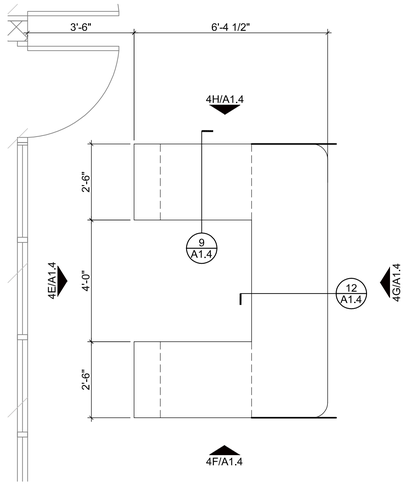

2 ENLARGED PLAN - SECURITY DESK

1/2"=1'-0"

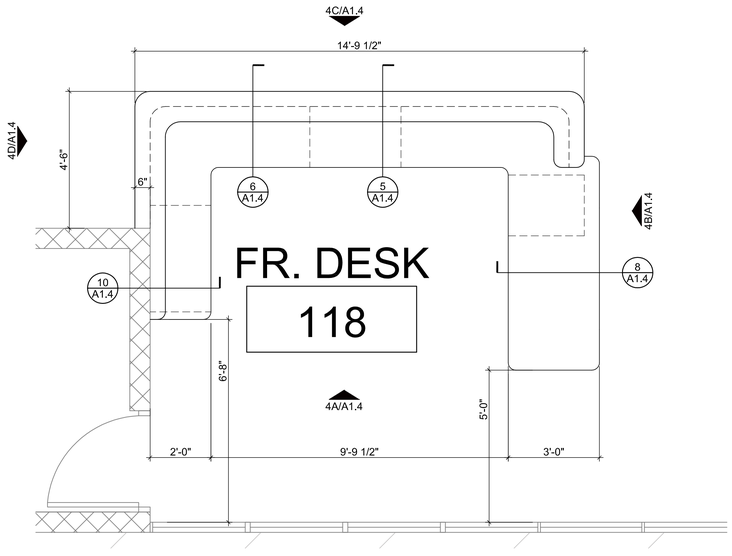

3 ENLARGED PLAN - MAIN RECEPTION DESK

1/2"=1'-0"

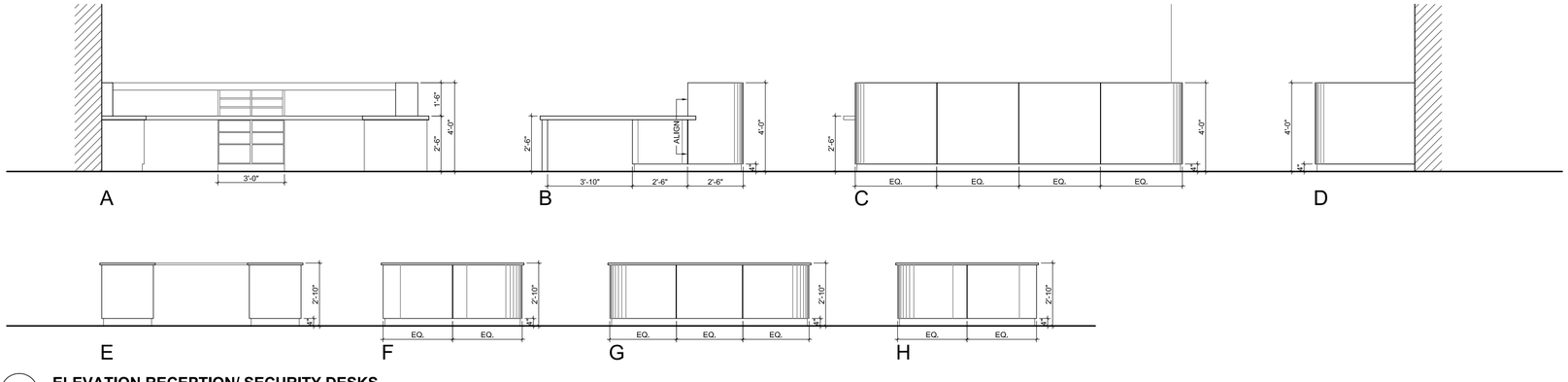

4 ELEVATION RECEPTION/ SECURITY DESKS

1/2"=1'-0"

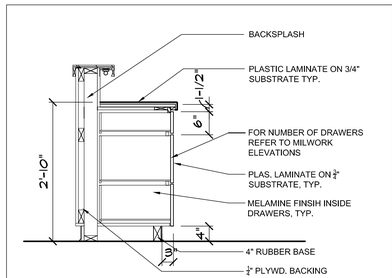

5 BASE CABINET WITH DRAWERS

SCALE: 3/4"=1'-0"

6-MBAS-03

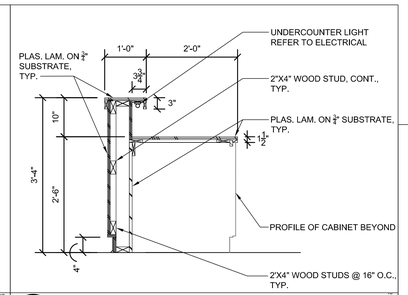

6 RECEPTION DESK OPEN BELOW

SCALE: 3/4"=1'-0"

6-MCTR-06

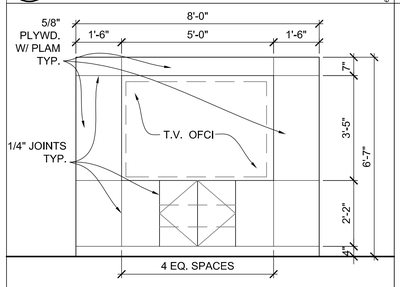

7 ELEVATION TV CABINET

SCALE: 1/2" = 1'-0"

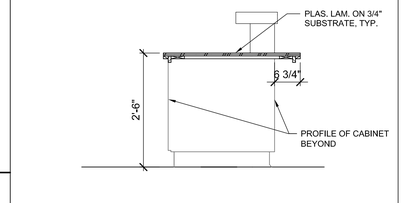

8 RECEPTION/CENTRAL DESK ADA COUNTER

SCALE: 3/4"=1'-0"

6-MCTR-06

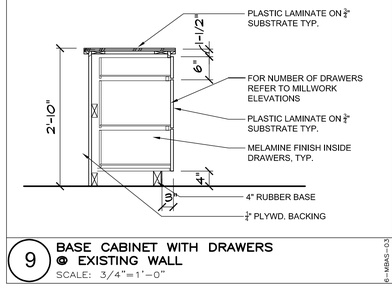

9 BASE CABINET WITH DRAWERS @ EXISTING WALL

SCALE: 3/4"=1'-0"

6-MBAS-03

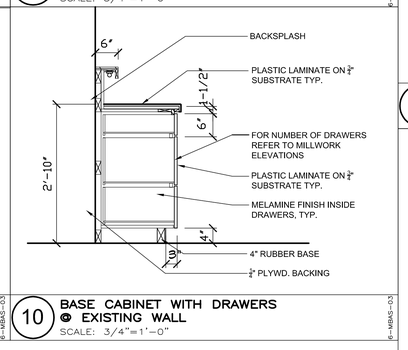

10 BASE CABINET WITH DRAWERS @ EXISTING WALL

SCALE: 3/4"=1'-0"

6-MBAS-03

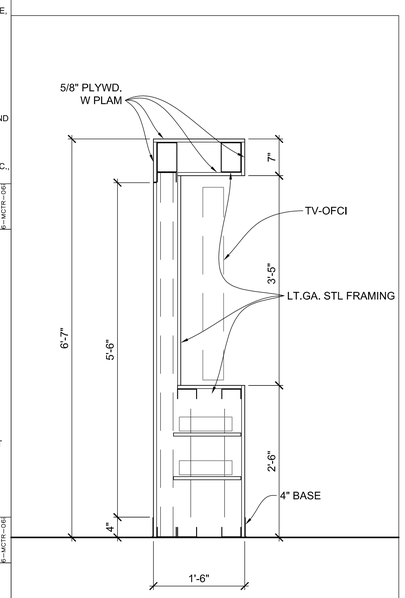

11 SECTION DETAIL TV CABINET

SCALE: 1" = 1'-0"

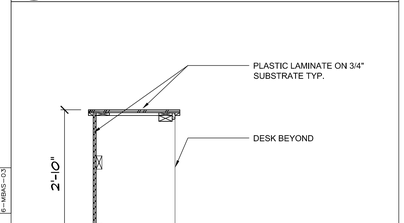

12 SECURITY DESK OPEN BELOW

SCALE: 3/4"=1'-0"

6-MBAS-03

GRESHAM BEACH ARCHITECTS INC.
177 NORTH CHURCH AVENUE
SUITE 755
TUCSON, ARIZONA, 85701
TEL:520.882.0698
FAX:520.882.0989

95% CONSTRUCTION DOCUMENTS NOT FOR CONSTRUCTION

CITY OF TUCSON
FACILITIES DESIGN & MANAGEMENT DIVISION

EL PUEBLO ACTIVITY CENTER

5100 S. MISSIONDALE RD.
TUCSON, AZ

REVISIONS

Number	Date	By

Designed	RAB/JC
Drawn	MLN
Checked	JC
Date	21 NOV 08
Job Number	27010.00

ENLARGED FLOOR PLAN

A1.4

OF

DOOR AND FRAME SCHEDULE

Number	Suffix	Room Name	DOOR			FRAME					FIRE RATING LABEL	HDWR. SET NO.
								DETAIL				
			Door Type	Door Size - PR W x H	MAT'L	Frame Type	MAT'L	HEAD	JAMB	SILL		
115	A	CORRIDOR	C	PR 36 x 84	HM	5	HM	-	-	-	-	-
115	B	CORRIDOR	C	PR 36 x 84	HM	5	HM	-	-	-	-	-
142	A	TEEN ROOM	A	42 x 84	HM	1	HM	-	-	-	-	-
142	B	TEEN ROOM	A	42 x 84	HM	4	HM	-	-	-	-	-
143	A	MUSIC	A	42 x 84	HM	4	HM	-	-	-	-	-
144	A	DANCE	A	42 x 84	HM	4	HM	-	-	-	-	-
144	B	DANCE	B	PR 34 x 84	HM	3	HM	-	-	-	-	-
145	A	CERAMICS	A	42 x 84	HM	1	HM	-	-	-	-	-
145	B	CERAMICS	A	44 x 84	HM	1	HM	-	-	-	-	-
145A	A	CERAMICS PATIO	A	42 x 84	HM	5	HM	-	-	-	-	-
146	A	KILN	A	48 x 84	HM	2	HM	-	-	-	-	-
147	A	PREP. AREA	D	88 x 99	WD	-	HM	-	-	-	-	-
147	B	PREP. AREA	D	118 x 99	WD	-	HM	-	-	-	-	-
148	A	GREEN STORAGE	D	96 x 99	WD	-	HM	-	-	-	-	-
149	A	149	D	72 x 99	WD	-	HM	-	-	-	-	-
151	A	STORAGE	B	PR 36 x 84	HM	2	HM	-	-	-	-	-
152	A	STORAGE	A	42 x 84	HM	1	HM	-	-	-	-	-

WINDOW SCHEDULE

	MARK	SIZE WIDTH	SIZE HEIGHT	TYPE	MATERIAL	NOTES
EXTERIOR	1	10'-0"	7'-0"	F	HM	
	2	10'-8"	7'-0"	F	HM	
	3	10'-0"	7'-0"	F	HM	
	4	12'-8"	7'-0"	F	HM	
	5	12'-8"	7'-0"	F	HM	
	6	12'-8"	7'-0"	F	HM	
	7	12'-8"	7'-0"	F	HM	
	8	12'-8"	7'-0"	H	HM	
	9	12'-8"	7'-0"	H	HM	
	10	VARIES	VARIES	D	HM	* SEE WINDOW TYPE FOR SIZING
	11	11'-4"	5'-0"	G	HM	
	12	14'-0"	8'-0"	A	HM	
INTERIOR	13	8'-0"	VARIES	C	HM	* SEE WINDOW TYPE FOR SIZING
	14	3'-8"	8'-0"	B	HM	
	15	12'-0"	8'-0"	A	HM	
	16	4'-2"	8'-0"	B	HM	
	17	8'-0"	VARIES	F	HM	* SEE WINDOW TYPE FOR SIZING
	18	3'-6"	8'-0"	B	HM	
	19	12'-0"	8'-0"	A	HM	
	20	3'-4"	8'-0"	B	HM	
	21	8'-0"	VARIES	D	HM	* SEE WINDOW TYPE FOR SIZING
	22	4'-4"	8'-0"	B	HM	
	23	12'-0"	8'-0"	A	HM	
	24	8'-0"	8'-0"	A	HM	
	25	9'-0"	VARIES	E	HM	* SEE WINDOW TYPE FOR SIZING

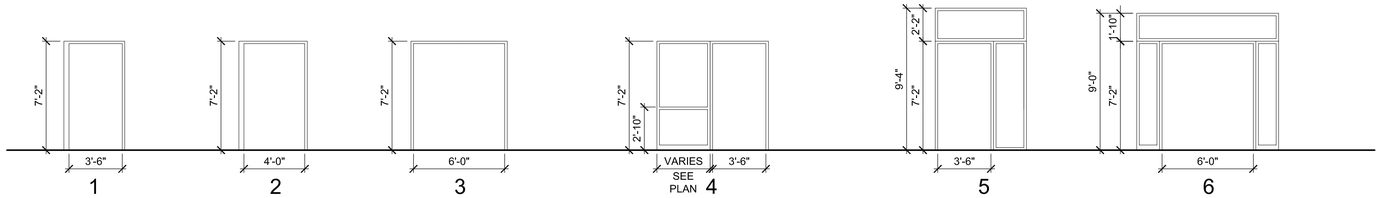

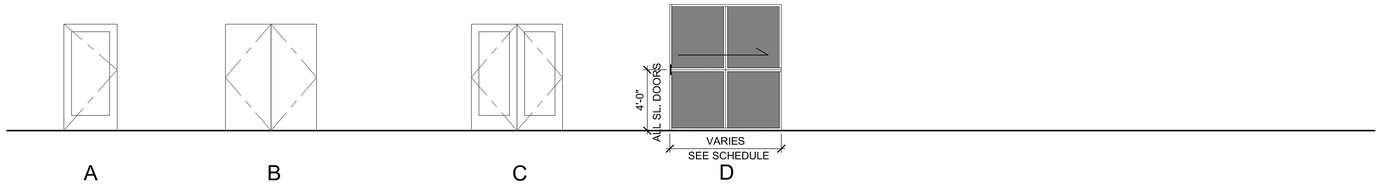

1 DOOR/ FRAME TYPES

1/4" = 1'-0"

0 1' 2' 4' 6'

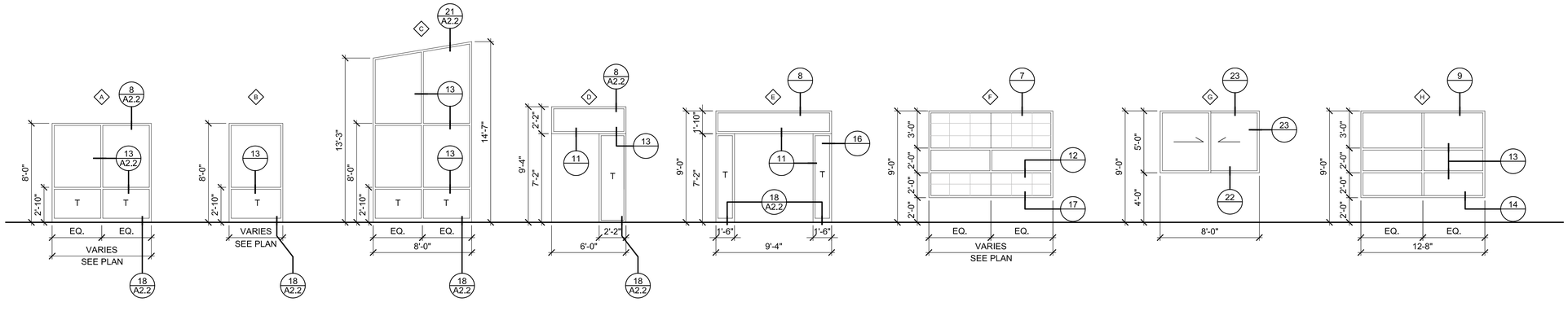

2 WINDOW TYPES

1/4" = 1'-0"

0 1' 2' 4' 6'

GRESHAM BEACH ARCHITECTS INC.
177 NORTH CHURCH AVENUE
SUITE 755
TUCSON, ARIZONA. 85701
TEL.520.882.0698
FAX.520.882.0989

95% CONSTRUCTION DOCUMENTS
NOT FOR CONSTRUCTION

CITY OF TUCSON
FACILITIES DESIGN & MANAGEMENT DIVISION

EL PUEBLO ACTIVITY CENTER

5100 S. MISSIONDALE RD.
TUCSON, AZ

REVISIONS

Number	Date	By

Designed	RAB/JC
Drawn	MLN
Checked	JC
Date	21 NOV 08
Job Number	27010.00

DOOR/ WINDOW SCHEDULE

A2.1

OF

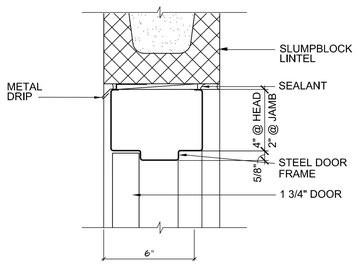

1 HEAD DETAIL JAMB SIMILAR
SCALE: 3"=1'-0"
8-035

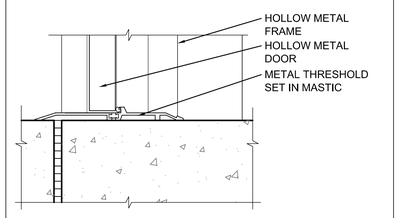

2 THRESHOLD DETAIL
SCALE: 3"=1'-0"
8-A07H-024

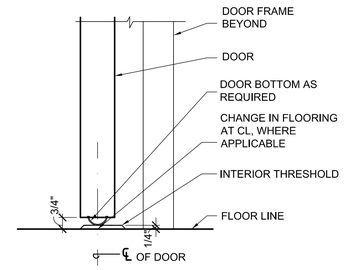

3 TYPICAL INTERIOR DOOR AUTOMATIC DOOR BOTTOM
SCALE: 3"=1'-0"
8-A07H-050

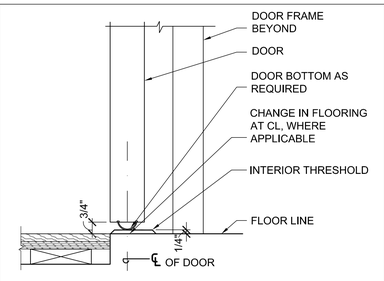

4 TYPICAL INTERIOR DOOR THRESHOLD @ WOOD FLOOR
SCALE: 3"=1'-0"
8-A07H-050

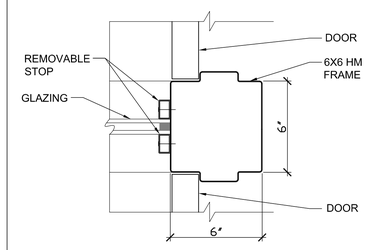

5 JAMB @ CORRIDOR DR/GLAZ
SCALE: 3" = 1'-0"

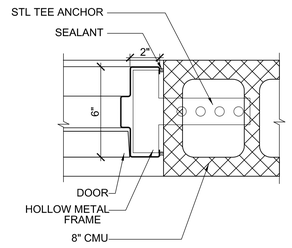

6 HOLLOW METAL DOOR AT CMU JAMB
SCALE: 3"=1'-0"
8-186

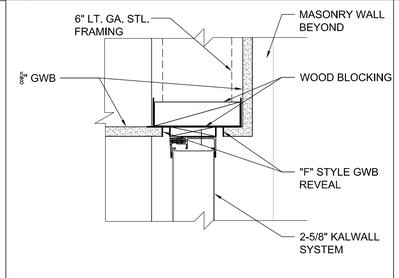

7 HEAD @ KALWALL TYPICAL
SCALE: 3" = 1'-0"

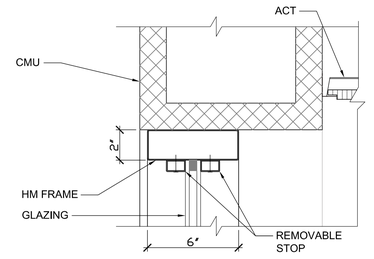

8 CORRIDOR WINDOW HEAD/JAMB
SCALE: 3" = 1'-0"

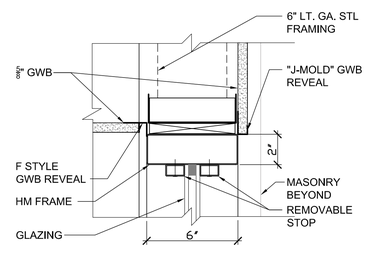

9 HEAD GLAZING @ WEST WALL
SCALE: 3" = 1'-0"

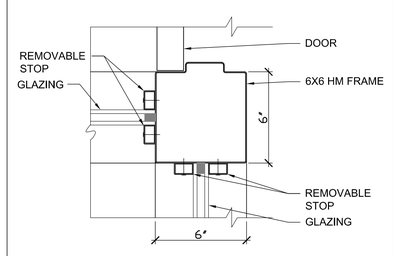

10 JAMB @ CORR. WIN./DR.
SCALE: 3" = 1'-0"

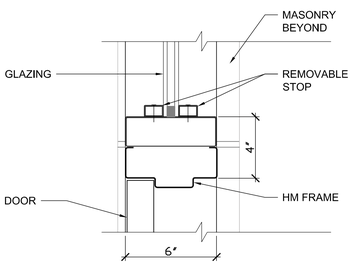

11 CORRIDOR WINDOW MULLION TYP.
SCALE: 3" = 1'-0"

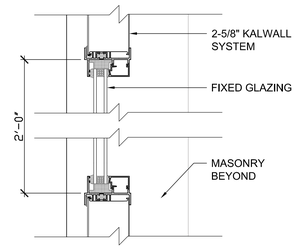

12 GLAZING MULLION @ KALWALL
SCALE: 3" = 1'-0"

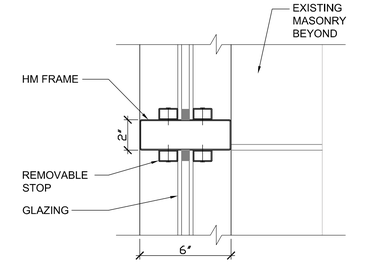

13 CORRIDOR WINDOW MULLION TYP.
SCALE: 3" = 1'-0"

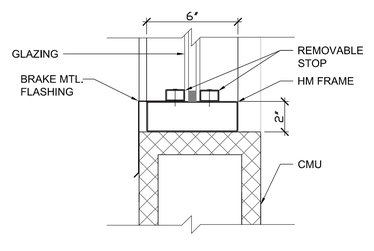

14 GLAZING SILL @ WEST WALL
SCALE: 3" = 1'-0"

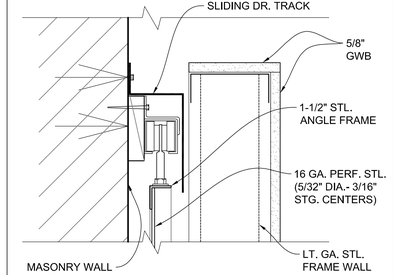

15 HEAD @ SLIDING DOOR
SCALE: 3" = 1'-0"

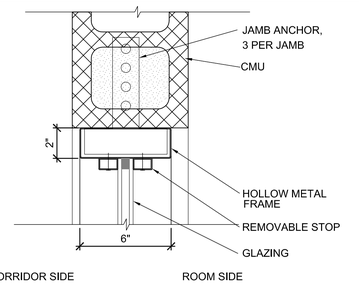

16 WINDOW HEAD/JAMB
SCALE: 3"=1'-0"
8-HMW-054

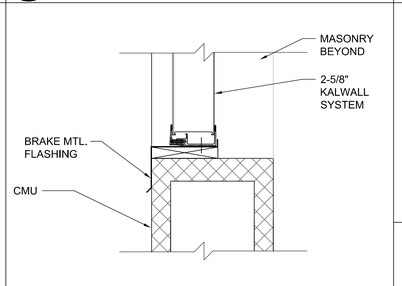

17 KALWALL SILL @ MASONRY TYPICAL
SCALE: 3" = 1'-0"

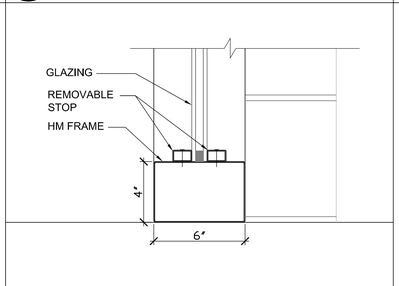

18 CORRIDOR WINDOW SILL @ CONCRETE FLOOR
SCALE: 3" = 1'-0"

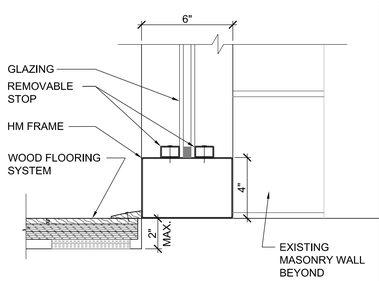

19 CORRIDOR WINDOW SILL @ WOOD FLOOR
SCALE: 3" = 1'-0"

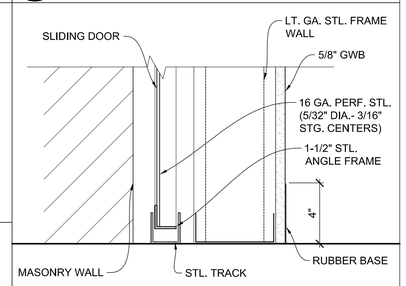

20 SILL DETAIL SLIDING DOOR
SCALE: 3" = 1'-0"

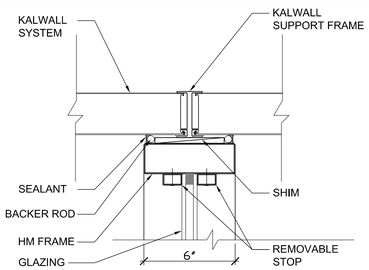

21 WINDOW HEAD @ KALWALL OVERHANG
SCALE: 3" = 1'-0"

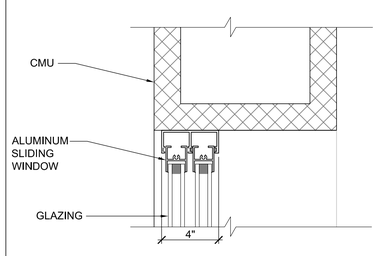

22 SLIDING WINDOW HEAD/JAMB
SCALE: 3" = 1'-0"

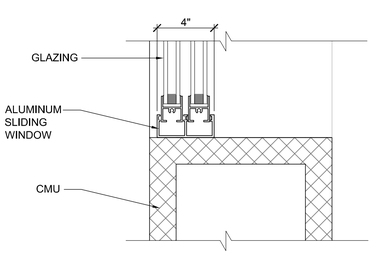

23 SLIDING WINDOW SILL
SCALE: 3" = 1'-0"

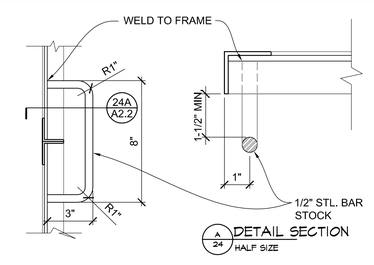

24 DOOR HANDLE @ SLIDING DOOR TYP.
SCALE: 3" = 1'-0"

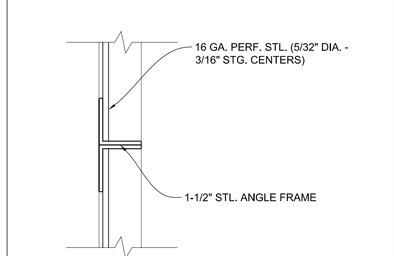

25 MULLION SLIDING DOOR TYPICAL
SCALE: 6" = 1'-0"

GRESHAM & BEACH
ARCHITECTS INC.
177 NORTH CHURCH AVENUE
SUITE 755
TUCSON . ARIZONA . 85701
TEL.520.882.0698
FAX.520.882.0989

95% CONSTRUCTION DOCUMENTS
NOT FOR CONSTRUCTION

CITY OF TUCSON
FACILITIES DESIGN & MANAGEMENT DIVISION
EL PUEBLO ACTIVITY CENTER
5100 S. MISSIONDALE RD.
TUCSON, AZ

REVISIONS

Number	Date	By

Designed	RAB/JC
Drawn	MLN
Checked	JC
Date	21 NOV 08
Job Number	27010.00

DOOR/ WINDOW DETAILS

A2.2

OF

KEYNOTES

1. STEEL GRATE SHADE SYSTEM (NOT USED)
2. 2-5/8" KALWALL SKYLIGHT ABOVE
3. OPEN TO STRUCTURE ABOVE
   PAINT OUT ALL EXPOSED STRUCTURE AND ROOF DECK

GENERAL NOTES

1. DIMENSIONS ARE TO FINISHED WALL FACE AND COLUMN CENTERLINE UNLESS NOTED OTHERWISE
2. REFER TO FLOOR PLAN FOR PARTITION TYPES
3. REFER TO MECHANICAL AND ELECTRICAL FOR DRAWINGS FOR EXTENT OF WORK
4. COORDINATE REFLECTED CEILING PLANS WITH MECHANICAL AND ELECTRICAL DRAWINGS
5. REFER TO INTERIOR ELEVATIONS FOR ADDITIONAL SCOPE OF WORK
6. REFER TO FLOOR PLAN FOR ADDITIONAL SCOPE OF WORK
7. REFER TO ROOM FINISH SCHEDULE FOR SPECIFIC SURFACE AND FINISH MATERIALS

CEILING LEGEND

- SUSPENDED CEILING GRID
- GWB CEILING
- DIFFUSER SEE MECH.
- RETURN AIR SEE MECH.
- SPEAKER SEE ELEC.
- SMOKE DETECTOR SEE ELEC.
- EXIT SIGN SEE ELEC.
- 2 X 4 LIGHT FIXTURE SEE ELEC.
- TYP. INDUSTIRAL FIXTURE SEE ELEC.
- WALL MOUNTED FIXTURE SEE ELEC.
- CAN LIGHT FIXTURE SEE ELEC.
- TYP. INDUSTIRAL FIXTURE SEE ELEC.
- CEILING FAN

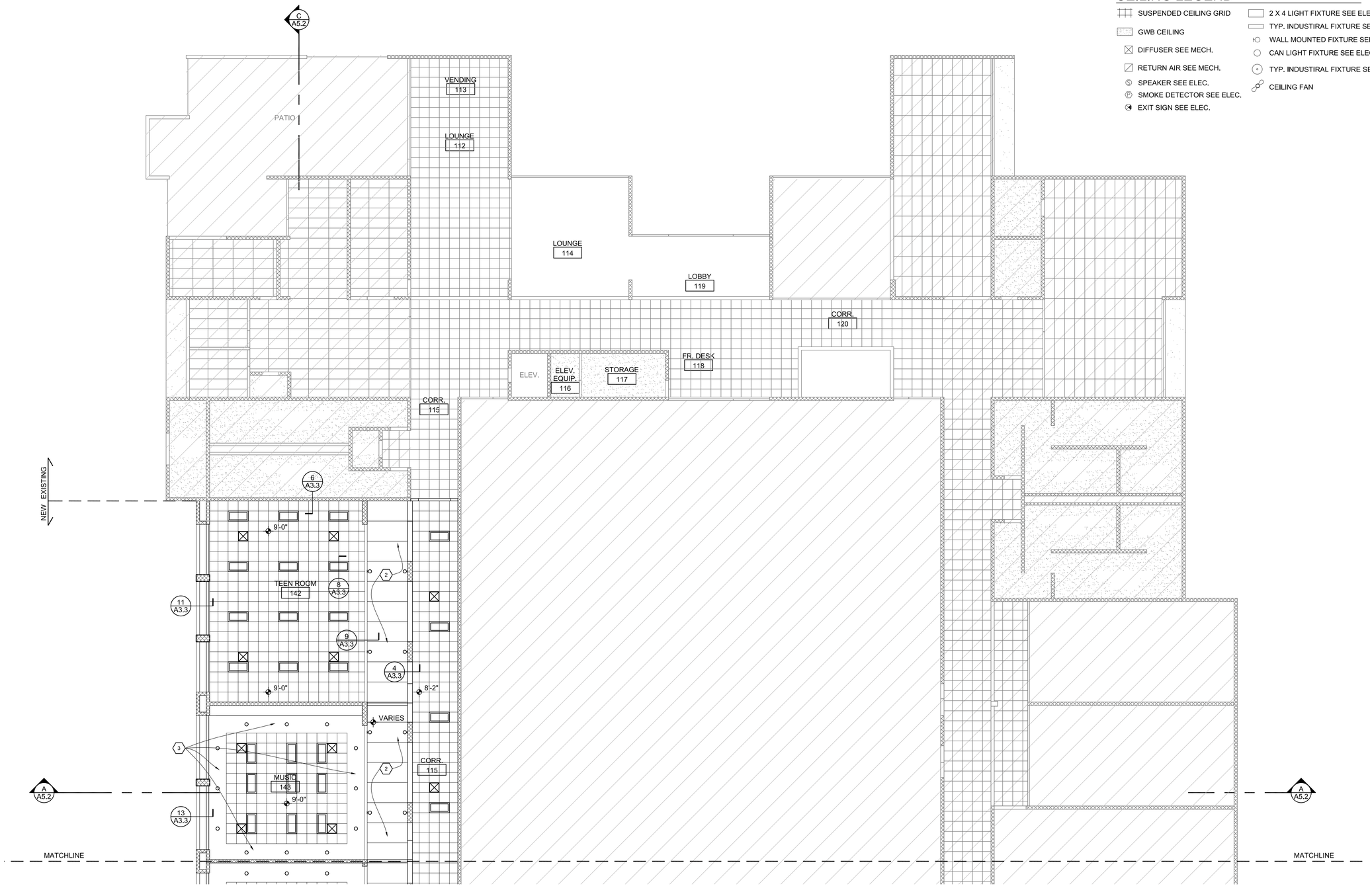

1 **RCP NORTH**
1/8" = 1'-0"
0 2' 4' 8' 12'

GRESHAM BEACH ARCHITECTS INC.
177 NORTH CHURCH AVENUE
SUITE 755
TUCSON . ARIZONA . 85701
TEL.520.882.0698
FAX.520.882.0989

95% CONSTRUCTION DOCUMENTS
NOT FOR CONSTRUCTION

CITY OF TUCSON
FACILITIES DESIGN & MANAGEMENT DIVISION

EL PUEBLO ACTIVITY CENTER

5100 S. MISSIONDALE RD.
TUCSON, AZ

REVISIONS

Number	Date	By

Designed	RAB/JC
Drawn	MLN
Checked	JC
Date	21 NOV 08
Job Number	27010.00

RCP NORTH

A3.1

OF

KEYNOTES

1. STEEL GRATE SHADE SYSTEM
2. 2-5/8" KALWALL SKYLIGHT ABOVE
3. OPEN TO STRUCTURE ABOVE
   PAINT OUT ALL EXPOSED STRUCTURE AND ROOF DECK

GENERAL NOTES

1. DIMENSIONS ARE TO FINISHED WALL FACE AND COLUMN CENTERLINE UNLESS NOTED OTHERWISE
2. REFER TO FLOOR PLAN FOR PARTITION TYPES
3. REFER TO MECHANICAL AND ELECTRICAL FOR DRAWINGS FOR EXTENT OF WORK
4. COORDINATE REFLECTED CEILING PLANS WITH MECHANICAL AND ELECTRICAL DRAWINGS
5. REFER TO INTERIOR ELEVATIONS FOR ADDITIONAL SCOPE OF WORK
6. REFER TO FLOOR PLAN FOR ADDITIONAL SCOPE OF WORK
7. REFER TO ROOM FINISH SCHEDULE FOR SPECIFIC SURFACE AND FINISH MATERIALS

CEILING LEGEND

- SUSPENDED CEILING GRID
- GWB CEILING
- DIFFUSER SEE MECH.
- RETURN AIR SEE MECH.
- SPEAKER SEE ELEC.
- SMOKE DETECTOR SEE ELEC.
- EXIT SIGN SEE ELEC.
- 2 X 4 LIGHT FIXTURE SEE ELEC.
- TYP. INDUSTIRAL FIXTURE SEE ELEC.
- WALL MOUNTED FIXTURE SEE ELEC.
- CAN LIGHT FIXTURE SEE ELEC.
- TYP. INDUSTIRAL FIXTURE SEE ELEC.
- CEILING FAN

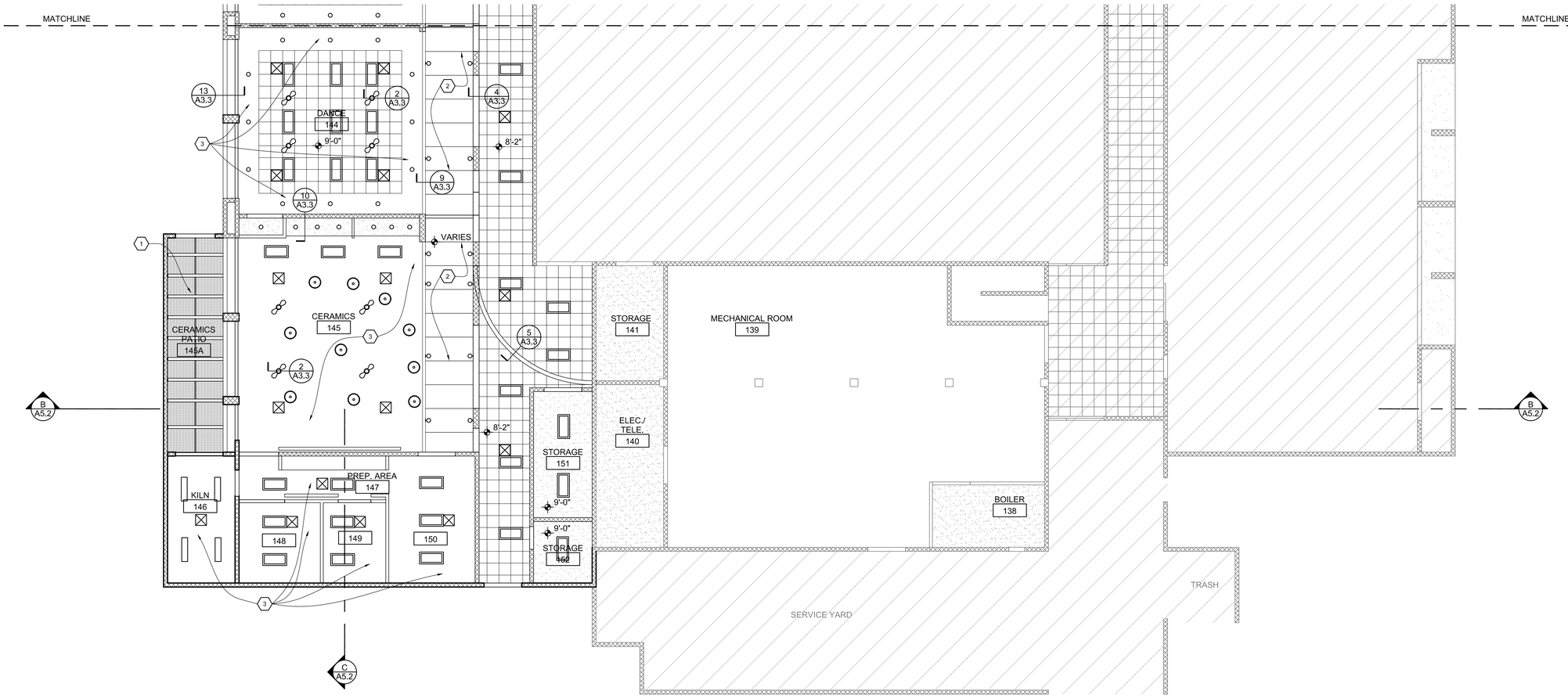

1 **RCP SOUTH**

1/8" = 1'-0"

0 2' 4' 8' 12'

GRESHAM BEACH ARCHITECTS INC.
177 NORTH CHURCH AVENUE
SUITE 755
TUCSON . ARIZONA . 85701
TEL.520.882.0698
FAX.520.882.0989

95% CONSTRUCTION DOCUMENTS NOT FOR CONSTRUCTION

CITY OF TUCSON
FACILITIES DESIGN & MANAGEMENT DIVISION

EL PUEBLO ACTIVITY CENTER

5100 S. MISSIONDALE RD.
TUCSON, AZ

REVISIONS

Number	Date	By

Designed	RAB/JC
Drawn	MLN
Checked	JC
Date	21 NOV 08
Job Number	27010.00

RCP SOUTH

A3.2

OF

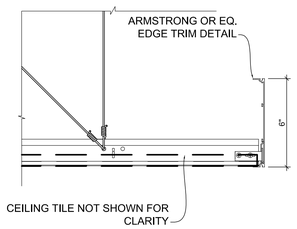

1 ACOUSTICAL CELING CLOUD EDGE DETAIL
SCALE: 3" = 1'-0"

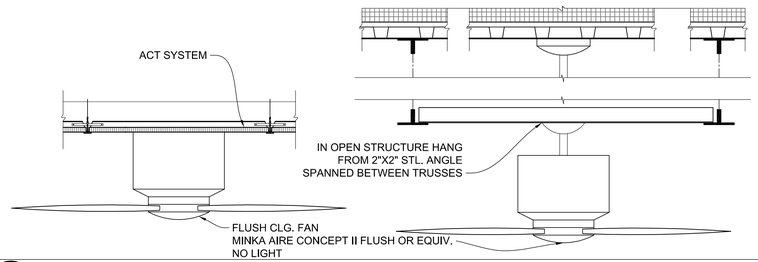

2 CEILING FAN @ ACT CEILING AND OPEN CEILING
SCALE: 1-1/2" = 1'-0"

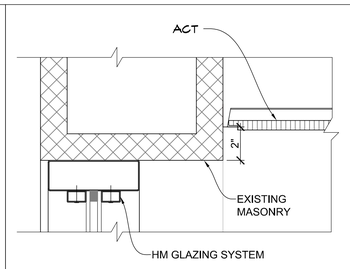

4 ACT @ EXISTING MASONRY
SCALE: 3" = 1'-0"

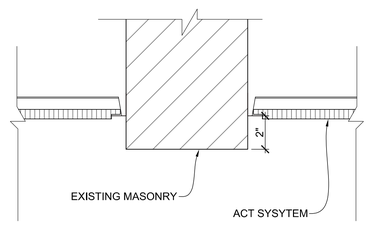

5 ACT @ EXISTING SOFFIT
SCALE: 3" = 1'-0"

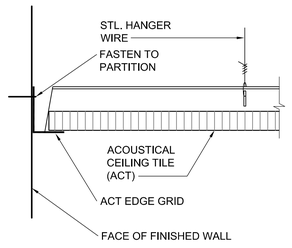

6 SUSPENDED CEILING SYSTEM EDGE DETAIL – TYPICAL
SCALE: Half Size
9-CLNG-01

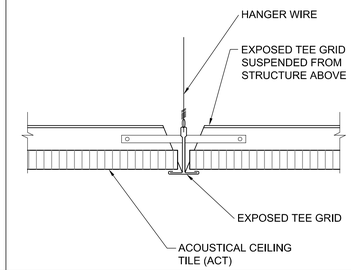

7 SUSPENDED CEILING GRID MAIN RUNNER – TYPICAL
SCALE: Half Size
9-CLNG-05

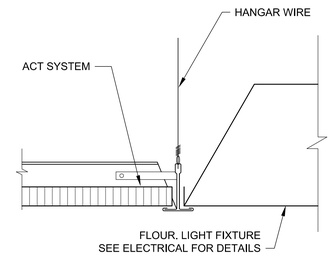

8 LIGHT FIXTURE @ CEILING GRID
SCALE: Half Size
9-CLNG-05

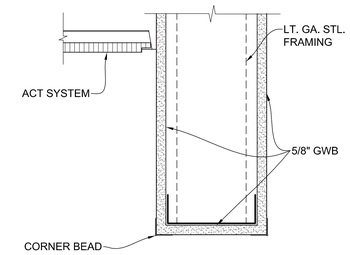

9 ACT @ GWB BULKHEAD
SCALE: 3" = 1'-0"

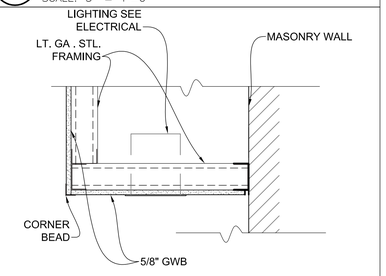

10 SOFFIT W/ CAN LIGHT
SCALE: 1-1/2" = 1'-0"

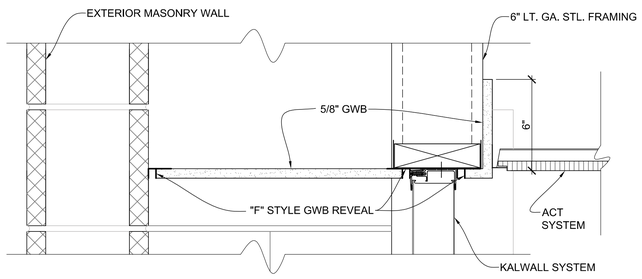

11 EXTERIOR SOFFIT/CEILING @ TEEN ROOM 142
SCALE: 3" = 1'-0"

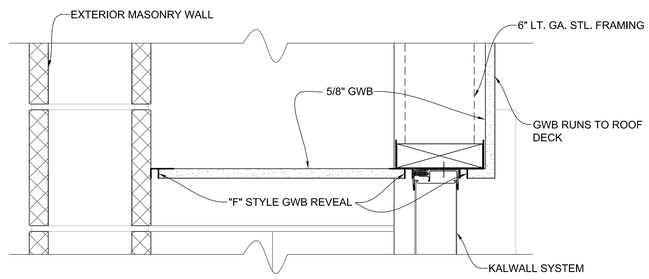

13 EXTERIOR SOFFIT/ CEILING @ ROOMS 143, 144 & 145
SCALE: 3" = 1'-0"

GRESHAM & BEACH
ARCHITECTS INC.
177 NORTH CHURCH AVENUE
SUITE 755
TUCSON . ARIZONA . 85701
TEL.520.882.0698
FAX.520.882.0989

95% CONSTRUCTION DOCUMENTS
NOT FOR CONSTRUCTION

CITY OF TUCSON
FACILITIES DESIGN & MANAGEMENT DIVISION
EL PUEBLO ACTIVITY CENTER
5100 S. MISSIONDALE RD.
TUCSON, AZ

REVISIONS

Number	Date	By

Designed	RAB/JC
Drawn	MLN
Checked	JC
Date	21 NOV 08
Job Number	27010.00

CEILING DETAILS

A3.3

OF

GENERAL NOTES

1. DIMENSIONS ARE TO FINISHED WALL FACE AND COLUMN CENTERLINE UNLESS NOTED OTHERWISE
2. REFER TO MECHANICAL AND ELECTRICAL DRAWINGS FOR EXTENT OF WORK

KEYNOTES

1. KALWALL @ 2°-12° SLOPE
2. TAPERED INSULATION BOARDS SLOPE 1/2"-12" MIN. WITH MODIFIED BITUMEN ROOFING
3. STEEL GRATE SHADE STRUCTURE
4. INSULATION BOARDS WITH MODIFIED BITUMEN ROOFING OVER SLOPED STRUCTURE
5. ROOF DRAIN
6. EDGE OF KALWALL
7. EXHAUST FAN

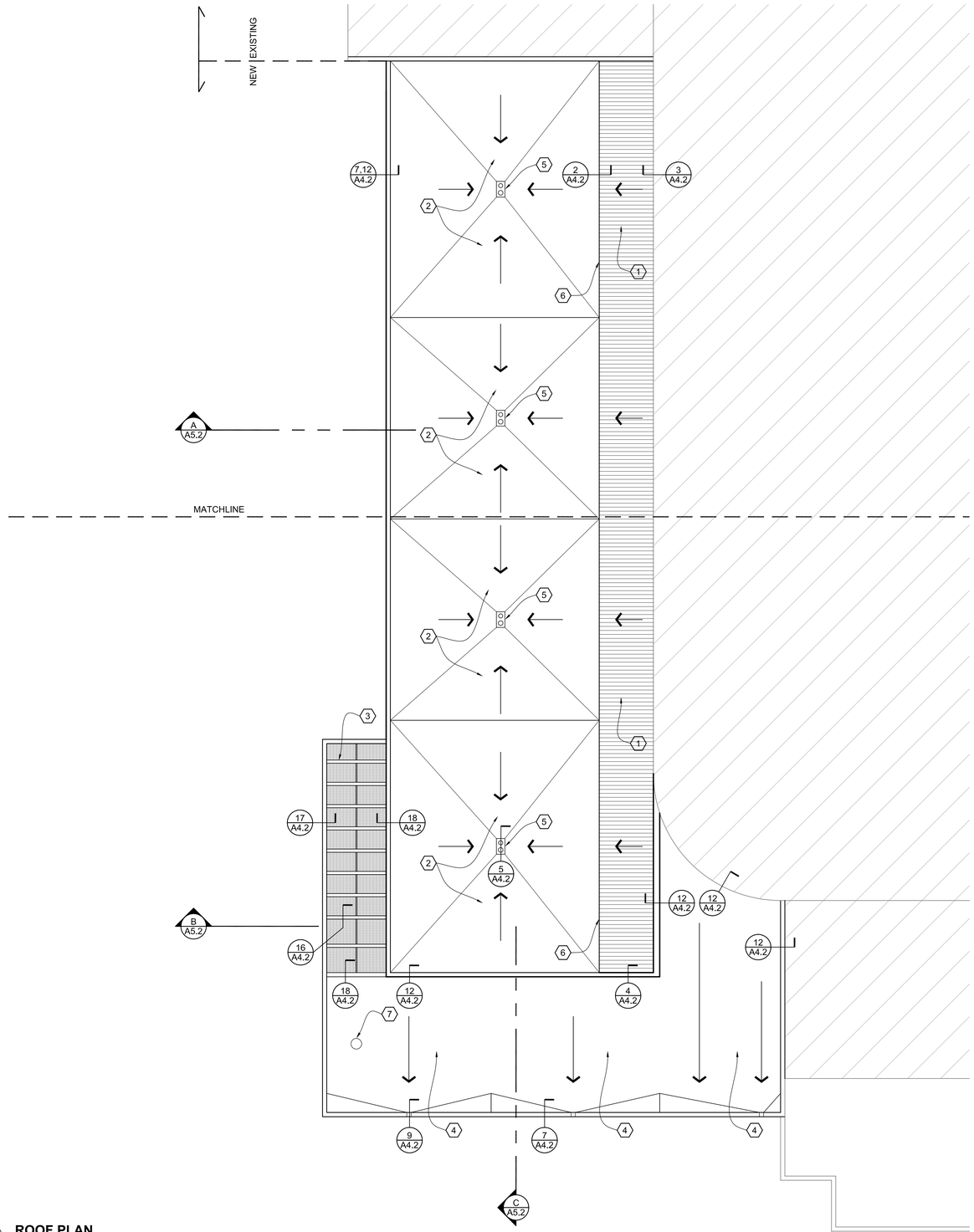

1 **ROOF PLAN**

1/8" = 1'-0"

0 2' 4' 8' 12'

GRESHAM BEACH ARCHITECTS INC.
177 NORTH CHURCH AVENUE
SUITE 755
TUCSON, ARIZONA. 85701
TEL.520.882.0698
FAX.520.882.0989

95% CONSTRUCTION DOCUMENTS NOT FOR CONSTRUCTION

CITY OF TUCSON
FACILITIES DESIGN & MANAGEMENT DIVISION

EL PUEBLO ACTIVITY CENTER

5100 S. MISSIONDALE RD.
TUCSON, AZ

REVISIONS

Number	Date	By

Designed	RAB/JC
Drawn	MLN
Checked	JC
Date	21 NOV 08
Job Number	27010.00

ROOF PLAN

A4.1

OF

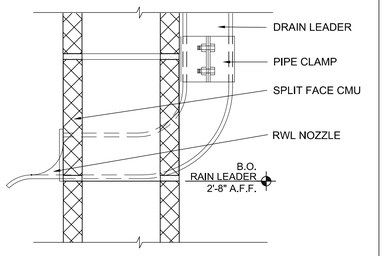

1 ROOF DRAIN LEADER DETAIL
SCALE: 3"=1'-0"

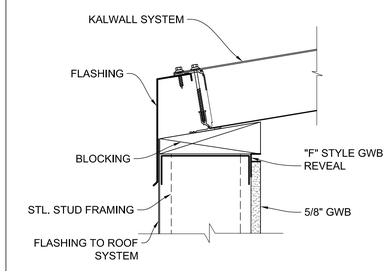

2 KALWALL DETAIL @ STEM WALL
SCALE: 3" = 1'-0"

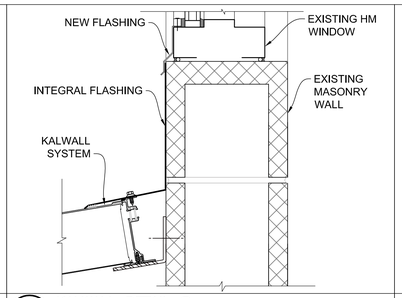

3 KALWALL DETAIL @ EXISTING MASONRY
SCALE:

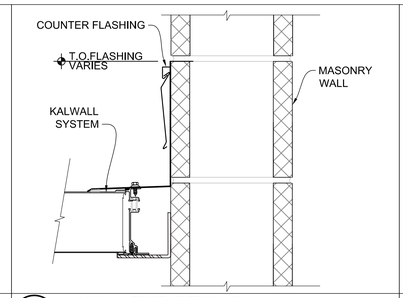

4 KALWALL EDGE DETAIL @ EXISTING MASONRY
SCALE: 3" = 1'-0"

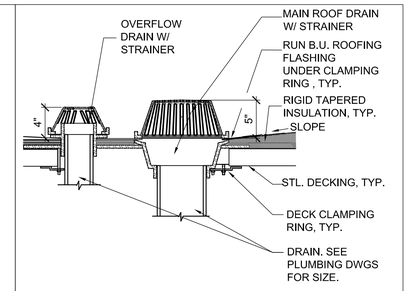

5 ROOF DRAIN AND OVERFLOW DRAIN
SCALE: 1-1/2" = 1'-0"

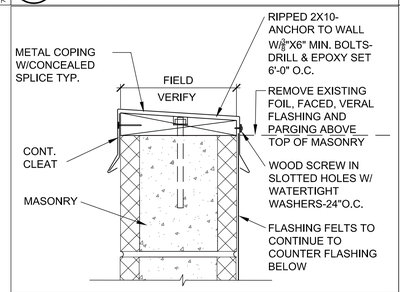

7 PARAPET COPING DETAIL
SCALE: 3"=1'-0"

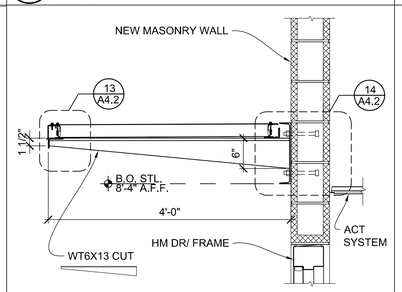

8 KALWALL OVERHANG @ SOUTH EXIT
SCALE: 1" = 1'-0"

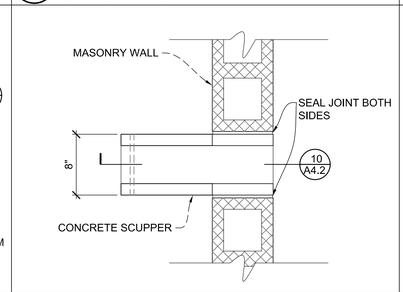

9 CONCRETE SCUPPER PLAN
SCALE: 1-1/2" = 1'-0"

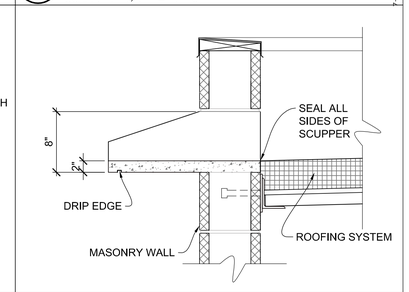

10 CONCRETE SCUPPER SECTION
SCALE: 1-1/2" = 1'-0"

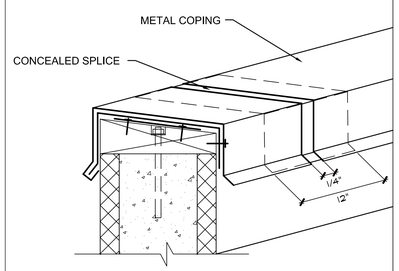

11 CONCEALED SPLINE AT COPING DETAIL
SCALE: 3"=1'-0"

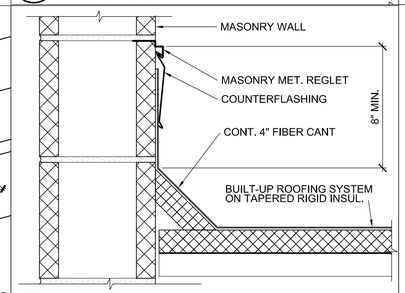

12 WALL FLASHING DETAIL AT CMU PARAPET
SCALE: 3"=1'-0"

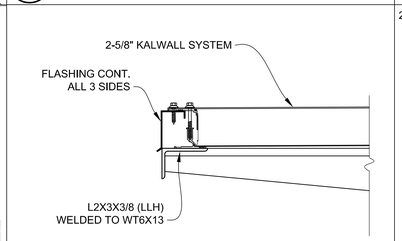

13 KALWALL OVERHANG @ DRIP EDGE CLOSURE
SCALE: 3" = 1'-0"

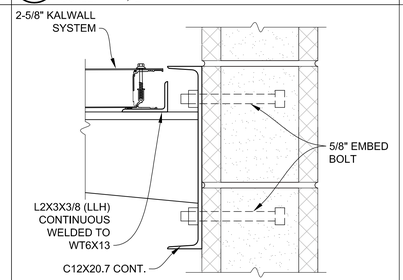

14 KALWALL OVERHANG CONNECTION @ MASONRY
SCALE: 3" = 1'-0"

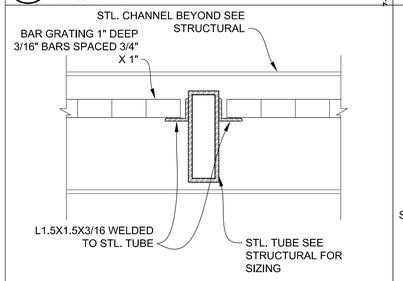

16 SECTION DETAIL CROSS MEMBER SHADE STRUCTURE
SCALE: 3" = 1'-0"

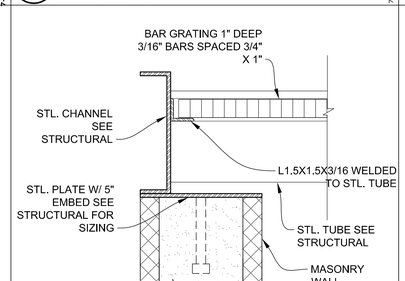

17 SHADE STRUCTURE @ 12'-0" MASONRY WALL
SCALE: 3" = 1'-0"

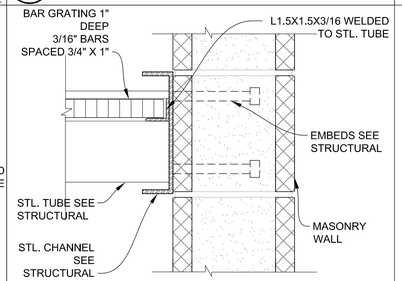

18 SHADE STRUCTURE @ 16'-0" MASONRY WALL
SCALE: 3" = 1'-0"

GRESHAM & BEACH
ARCHITECTS INC.
177 NORTH CHURCH AVENUE
SUITE 755
TUCSON . ARIZONA . 85701
TEL.520.882.0698
FAX:520.882.0989

95% CONSTRUCTION DOCUMENTS
NOT FOR CONSTRUCTION

CITY OF TUCSON
FACILITIES DESIGN & MANAGEMENT DIVISION
EL PUEBLO ACTIVITY CENTER
5100 S. MISSIONDALE RD.
TUCSON, AZ

REVISIONS

Number	Date	By

Designed	RAB/JC
Drawn	MLN
Checked	JC
Date	21 NOV 08
Job Number	27010.00

ROOF DETAILS

A4.2

OF

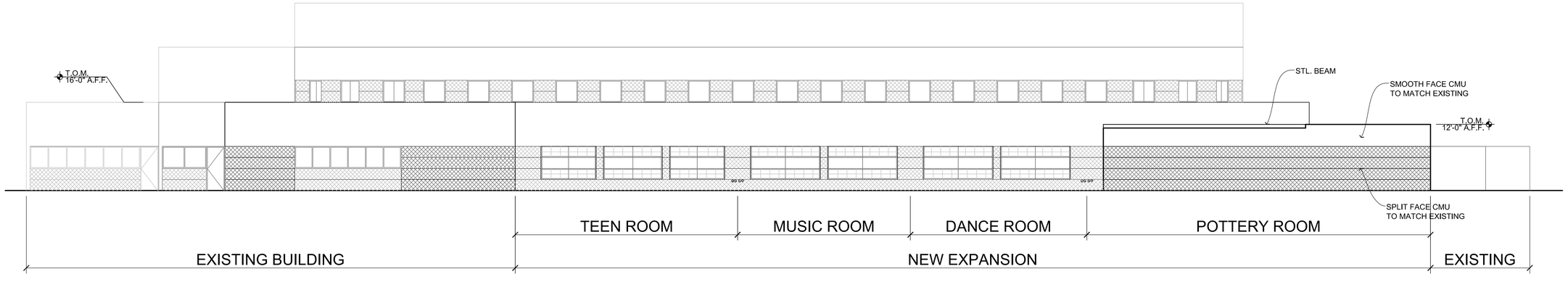

1 **WEST ELEVATION**

0 4' 8' 16' 24' 1/16" = 1'-0"

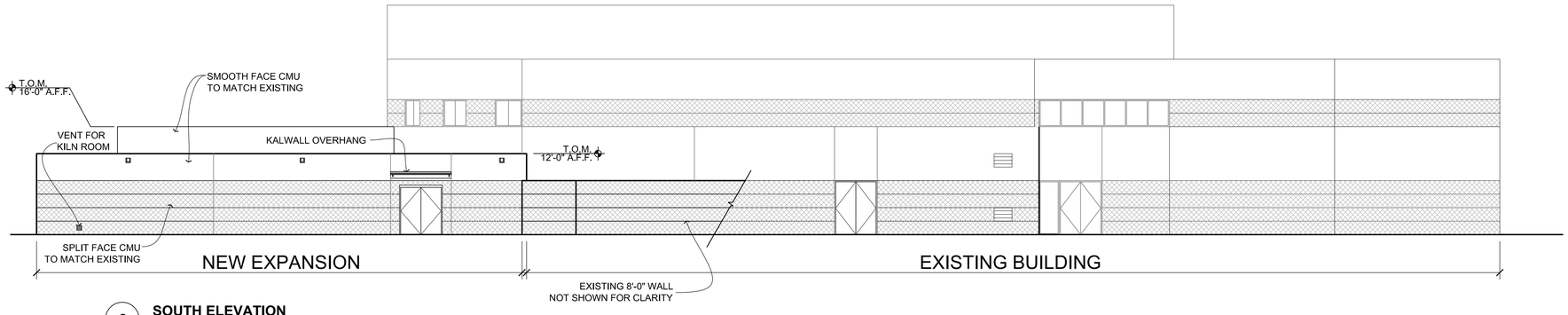

2 **SOUTH ELEVATION**

0 4' 8' 16' 24' 1/16" = 1'-0"

GRESHAM BEACH
ARCHITECTS INC.
177 NORTH CHURCH AVENUE
SUITE 755
TUCSON . ARIZONA . 85701
TEL . 520 . 882 . 0698
FAX . 520 . 882 . 0989

95% CONSTRUCTION DOCUMENTS
NOT FOR CONSTRUCTION

CITY OF TUCSON
FACILITIES DESIGN & MANAGEMENT DIVISION

EL PUEBLO ACTIVITY CENTER

5100 S. MISSIONDALE RD.
TUCSON, AZ

REVISIONS

Number	Date	By

Designed	RAB/JC
Drawn	MLN
Checked	JC
Date	21 NOV 08
Job Number	27010.00

EXTERIOR ELEVATIONS

A5.1

OF

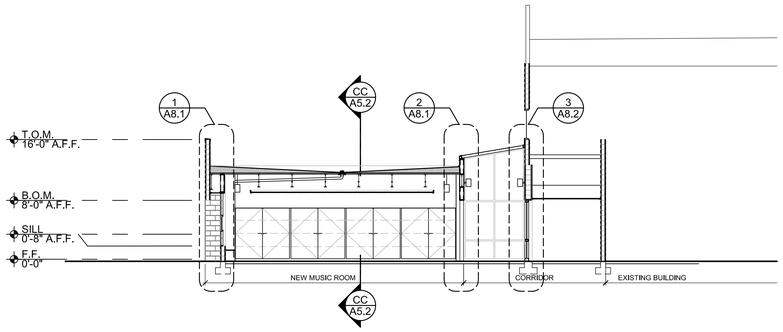

1 **SECTION A-A**

1/16" = 1'-0"

0 4' 8' 16' 24'

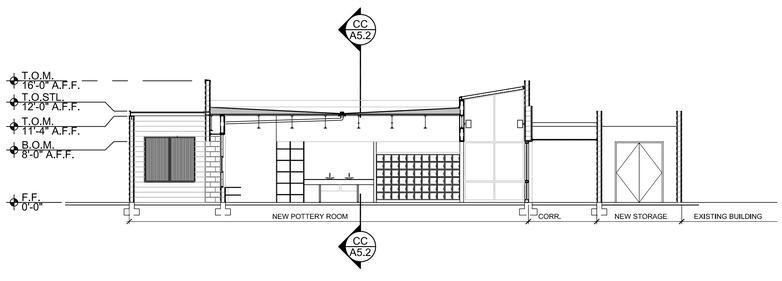

2 **SECTION B-B**

1/16" = 1'-0"

0 4' 8' 16' 24'

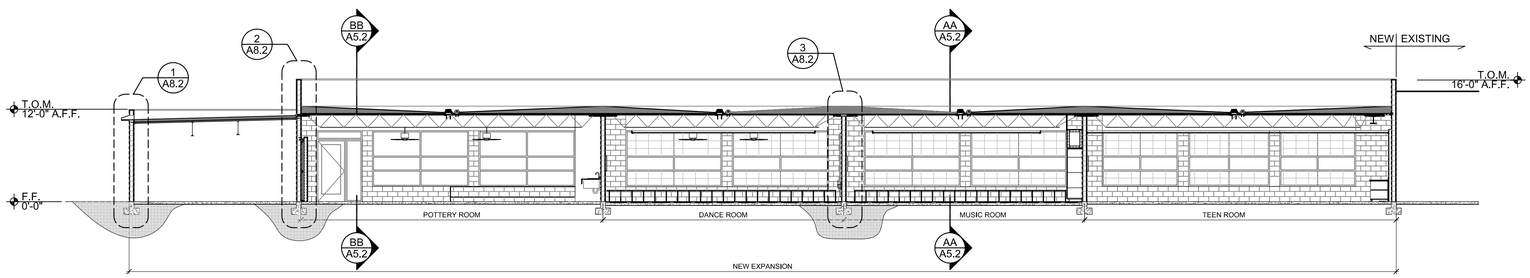

3 **SECTION C-C**

1/16" = 1'-0"

0 4' 8' 16' 24'

GRESHAM BEACH
ARCHITECTS INC.
177 NORTH CHURCH AVENUE
SUITE 755
TUCSON . ARIZONA . 85701
TEL.520.882.0698
FAX.520.882.0989

95% CONSTRUCTION DOCUMENTS
NOT FOR CONSTRUCTION

CITY OF TUCSON
FACILITIES DESIGN & MANAGEMENT DIVISION

EL PUEBLO ACTIVITY CENTER

5100 S. MISSIONDALE RD.
TUCSON, AZ

REVISIONS

Number	Date	By

Designed	RAB/JC
Drawn	MLN
Checked	JC
Date	21 NOV 08
Job Number	27010.00

BUILDING SECTIONS

A5.2

OF

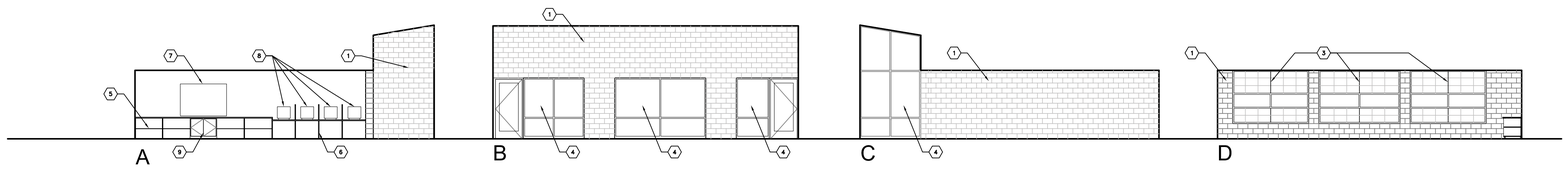

1 INTERIOR ELEVATIONS TEEN ROOM 142

1/8" = 1'-0"

0 2' 4' 8' 12'

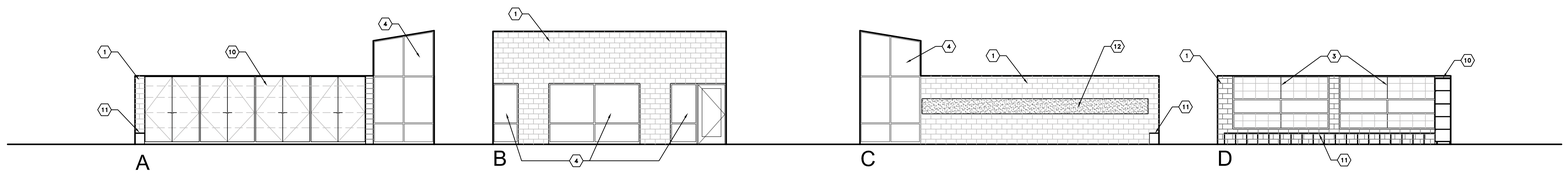

2 INTERIOR ELEVATIONS MUSIC ROOM 143

1/8" = 1'-0"

0 2' 4' 8' 12'

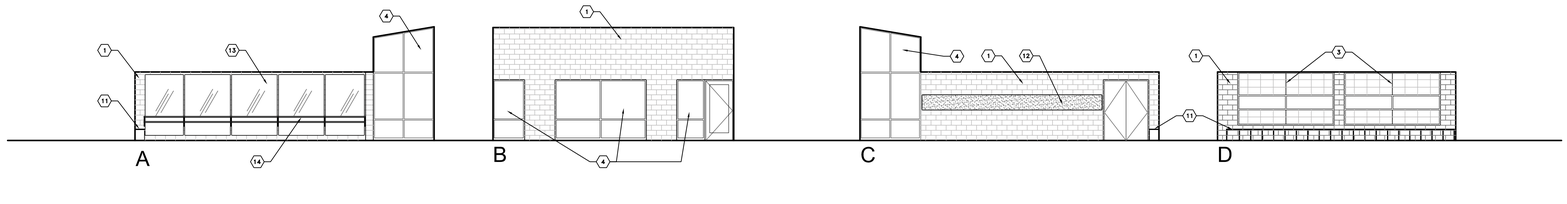

3 INTERIOR ELEVATIONS DANCE ROOM 144

1/8" = 1'-0"

0 2' 4' 8' 12'

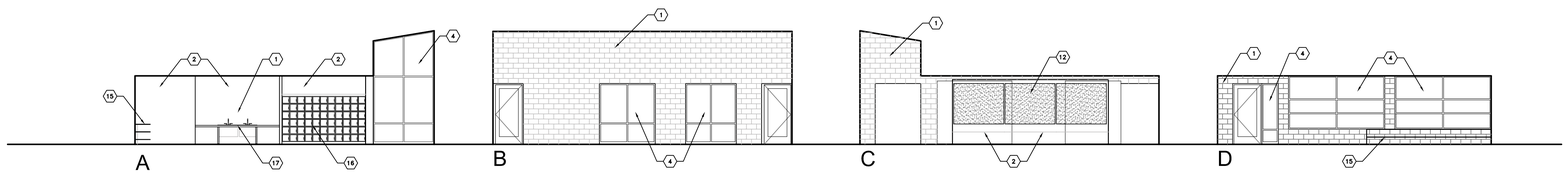

4 INTERIOR ELEVATIONS CERAMICS ROOM 145

1/8" = 1'-0"

0 2' 4' 8' 12'

5 INTERIOR ELEVATIONS PREP. AREA 150

1/8" = 1'-0"

0 2' 4' 8' 12'

KEYNOTES

1. MASONRY WALL
2. GWB WALL
3. KALWALL SYSTEM
4. GLAZING
5. OPEN SHELVING SEE DETAIL 14/A9.2
6. COMPUTER STATION SEE DETAIL 7/A9.2
7. TV - OFCI
8. COMPUTERS - OFCI
9. LOCKABLE CABINET SEE DETAIL 14/A9.2
10. STORAGE CABINETS SEE DETAIL 15/A9.2
11. SEATING/STORAGE SEE DETAIL 9A9.2
12. TACKBOARD/ACOUSTICAL SEE DETAILS 5&6 ON A9.2
13. MIRRORS SEE DETAIL 7/A9.2
14. DOUBLE BALLET BARS SEE DETAIL 11/A9.2
15. SHELVING SEE DETAIL 10/A9.2
16. LOCKERS SEE DETAIL 3/A9.2
17. STAINLESS STEEL SINK SEE PLUMBING
18. COUNTER SEE DETAIL 4/A9.2
19. SPRAY STATION
20. ELECTRIC KILNS
21.
22. METAL STORAGE SHELVES
23. OPEN SHELVING SEE DETAIL 12/A9.1
24. PVC MILL & STAND
25. DUST FAN
26. WRITING SURFACE

GRESHAM BEACH
ARCHITECTS INC.
177 NORTH CHURCH AVENUE
SUITE 755
TUCSON . ARIZONA . 85701
TEL.520.882.0698
FAX.520.882.0989

95% CONSTRUCTION DOCUMENTS
NOT FOR CONSTRUCTION

CITY OF TUCSON
FACILITIES DESIGN & MANAGEMENT DIVISION

EL PUEBLO ACTIVITY CENTER

5100 S. MISSIONDALE RD.
TUCSON, AZ

REVISIONS

Number	Date	By

Designed	RAB/JC
Drawn	MLN
Checked	JC
Date	21 NOV 08
Job Number	27010.00

INTERIOR ELEVATIONS

A6.1

OF

1 INTERIOR ELEVATIONS KILN ROOM 146

1/8" = 1'-0"

0 2' 4' 8' 12'

2 INTERIOR ELEVATIONS GREEN ROOM 148

1/8" = 1'-0"

0 2' 4' 8' 12'

3 INTERIOR ELEVATIONS ROOM 149

1/8" = 1'-0"

0 2' 4' 8' 12'

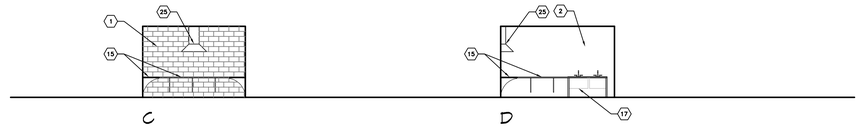

4 INTERIOR ELEVATIONS ROOM 150

1/8" = 1'-0"

0 2' 4' 8' 12'

KEYNOTES

1. MASONRY WALL
2. GWB WALL
3. KALWALL SYSTEM
4. GLAZING
5. OPEN SHELVING SEE DETAIL 14/A9.2
6. COMPUTER STATION SEE DETAIL 7/A9.2
7. TV - OFCI
8. COMPUTERS - OFCI
9. LOCKABLE CABINET SEE DETAIL 14/A9.2
10. STORAGE CABINETS SEE DETAIL 15/A9.2
11. SEATING/STORAGE SEE DETAIL 9A9.2
12. TACKBOARD/ACOUSTICAL SEE DETAILS 5&6 ON A9.2
13. MIRRORS SEE DETAIL 7/A9.2
14. DOUBLE BALLET BARS SEE DETAIL 11/A9.2
15. SHELVING SEE DETAIL 10/A9.2
16. LOCKERS SEE DETAIL 3/A9.2
17. STAINLESS STEEL SINK SEE PLUMBING
18. COUNTER SEE DETAIL 4/A9.2
19. SPRAY STATION
20. ELECTRIC KILNS
21.
22. METAL STORAGE SHELVES
23. OPEN SHELVING SEE DETAIL 12/A9.1
24. PVC MILL & STAND
25. DUST FAN
26. WRITING SURFACE

GRESHAM BEACH
ARCHITECTS INC.
177 NORTH CHURCH AVENUE
SUITE 755
TUCSON . ARIZONA . 85701
TEL.520.882.0698
FAX.520.882.0989

95% CONSTRUCTION DOCUMENTS
NOT FOR CONSTRUCTION

CITY OF TUCSON
FACILITIES DESIGN & MANAGEMENT DIVISION
EL PUEBLO ACTIVITY CENTER
5100 S. MISSIONDALE RD.
TUCSON, AZ

REVISIONS

Number	Date	By

Designed	RAB/JC
Drawn	MLN
Checked	JC
Date	21 NOV 08
Job Number	27010.00

INTERIOR ELEVATIONS

A6.2

OF

KEYNOTES

1. 8X8X16 SMOOTH FACE CMU TO MATCH BUILDING EXISTING
2. 8X8X16 SPLIT FACE CMU TO MATCH BUILDING EXISTING
3. EXISTING MASONRY
4. STEEL JOISTS - SEE STRUCTURAL
5. STEEL GRATING
6. PARAPET CAP FLASHING TO MATCH BUILDING EXISTING
7. KALWALL SYSTEM
8. EXTERIOR GLAZING SYSTEM
9. INTERIOR GLAZING SYSTEM
10. LAY-IN ACOUSTIC CEILING SYSTEM
11. CONCRETE FOUNDATION - SEE STRUCTURAL
12. CONCRETE SLAB - SEE STRUCTURAL
13. TAPERED INSULATION ROOF SYSTEM
14. STEEL STUD FRAMING
15. 5/8" GWB
16. CONCRETE SCUPPER
17. WOOD FLOORING SYSTEM
18. DOUBLE BALLET BAR
19. FULL THICKNESS SOUND BATTS BETWEEN STRUCTURE

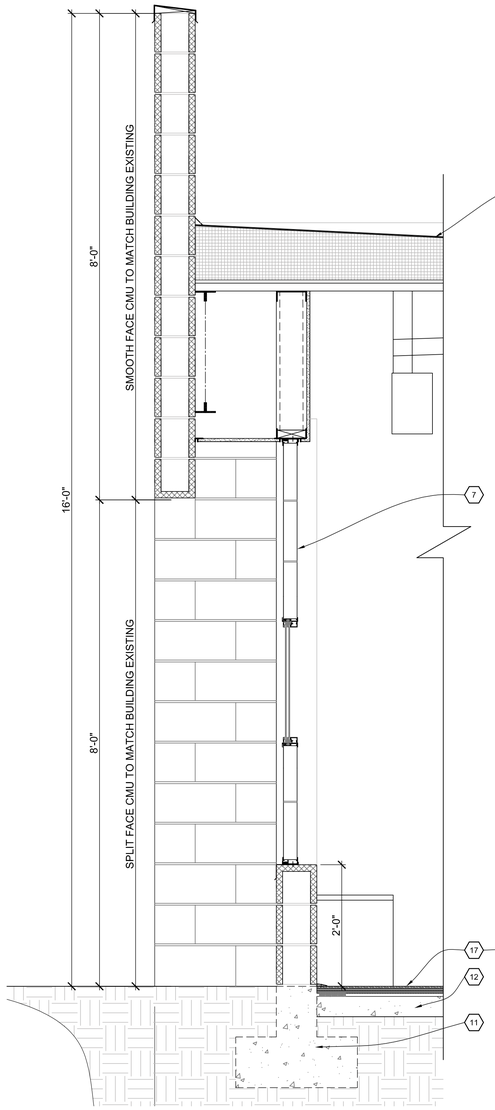

2 WALL SECTION
1" = 1'-0"
0 4" 8" 1' 2'

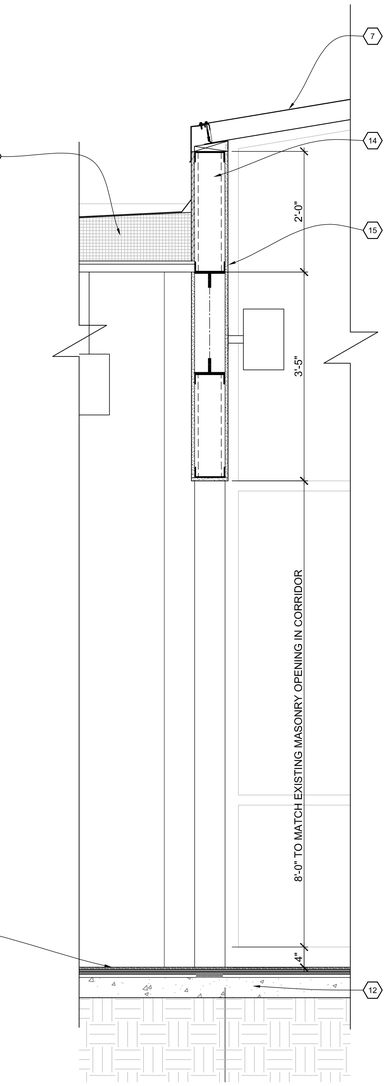

3 WALL SECTION
1" = 1'-0"
0 4" 8" 1' 2'

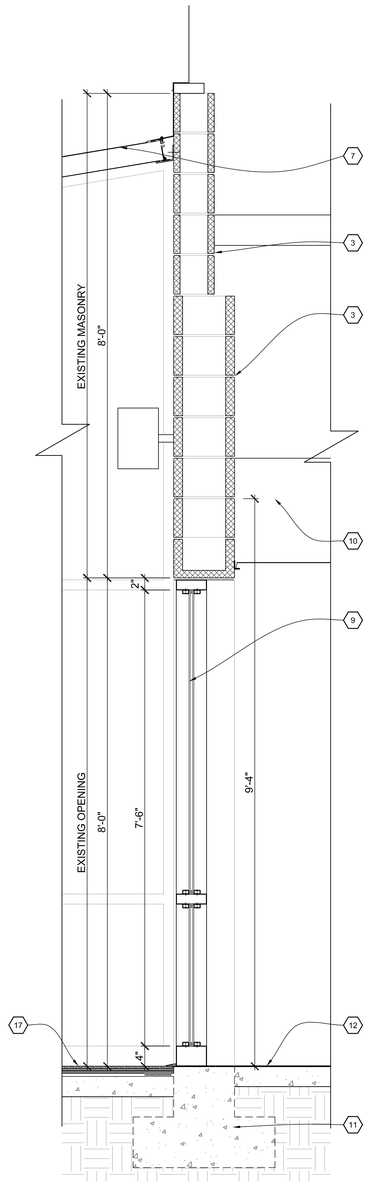

4 WALL SECTION
1" = 1'-0"
0 4" 8" 1' 2'

GRESHAM & BEACH
ARCHITECTS INC.
177 NORTH CHURCH AVENUE
SUITE 755
TUCSON, ARIZONA, 85701
TEL.520.882.0698
FAX.520.882.0989

95% CONSTRUCTION DOCUMENTS
NOT FOR CONSTRUCTION

CITY OF TUCSON
FACILITIES DESIGN & MANAGEMENT DIVISION

EL PUEBLO ACTIVITY CENTER

5100 S. MISSIONDALE RD.
TUCSON, AZ

REVISIONS

Number	Date	By

Designed	RAB/JC
Drawn	MLN
Checked	JC
Date	21 NOV 08
Job Number	27010.00

WALL SECTIONS

A8.1

KEYNOTES

1. 8X8X16 SMOOTH FACE CMU TO MATCH BUILDING EXISTING
2. 8X8X16 SPLIT FACE CMU TO MATCH BUILDING EXISTING
3. EXISTING MASONRY
4. STEEL JOISTS - SEE STRUCTURAL
5. STEEL GRATING
6. PARAPET CAP FLASHING TO MATCH BUILDING EXISTING
7. KALWALL SYSTEM
8. EXTERIOR GLAZING SYSTEM
9. INTERIOR GLAZING SYSTEM
10. LAY-IN ACOUSTIC CEILING SYSTEM
11. CONCRETE FOUNDATION - SEE STRUCTURAL
12. CONCRETE SLAB - SEE STRUCTURAL
13. TAPERED INSULATION ROOF SYSTEM
14. STEEL STUD FRAMING
15. 5/8" GWB
16. CONCRETE SCUPPER
17. WOOD FLOORING SYSTEM
18. DOUBLE BALLET BAR
19. FULL THICKNESS SOUND BATTS BETWEEN STRUCTURE

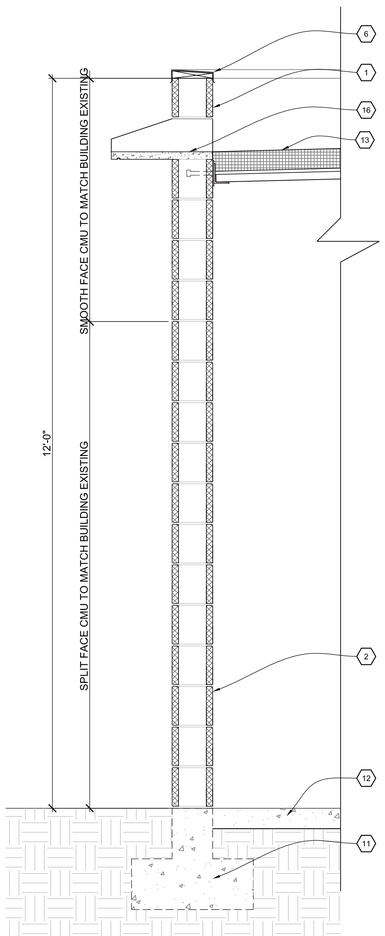

1 WALL SECTION
1" = 1'-0"
0 4" 8" 1' 2'

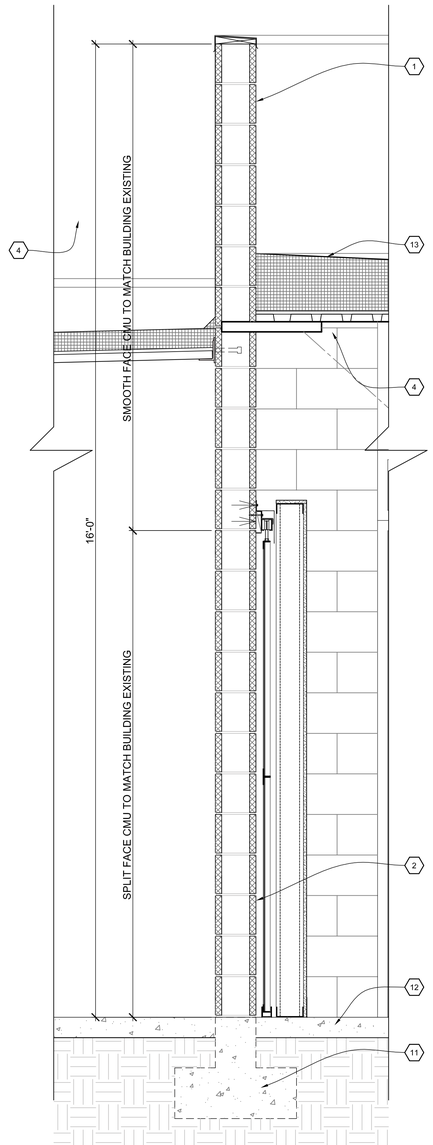

2 WALL SECTION
1" = 1'-0"
0 4" 8" 1' 2'

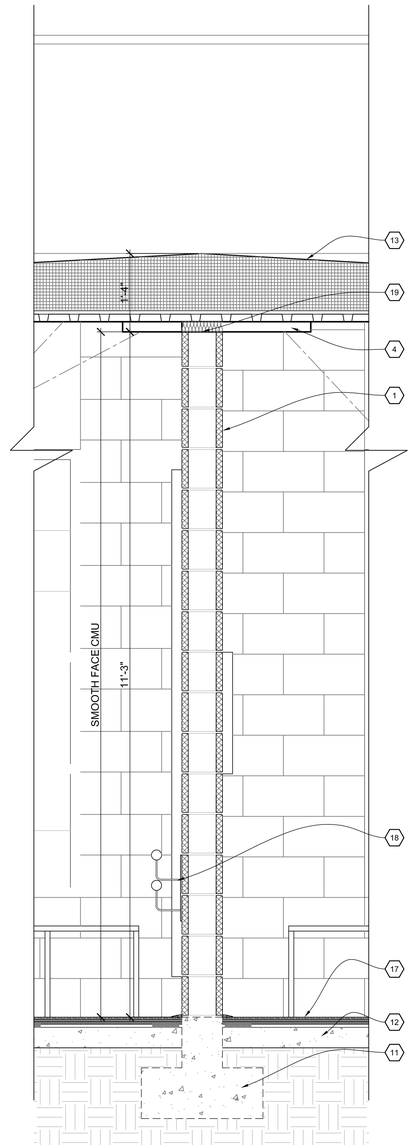

3 WALL SECTION
1" = 1'-0"
0 4" 8" 1' 2'

GRESHAM BEACH
ARCHITECTS INC.
177 NORTH CHURCH AVENUE
SUITE 755
TUCSON . ARIZONA . 85701
TEL.520.882.0698
FAX.520.882.0989

95% CONSTRUCTION DOCUMENTS
NOT FOR CONSTRUCTION

CITY OF TUCSON
FACILITIES DESIGN & MANAGEMENT DIVISION

EL PUEBLO ACTIVITY CENTER

5100 S. MISSIONDALE RD.
TUCSON, AZ

REVISIONS

Number	Date	By

Designed	RAB/JC
Drawn	MLN
Checked	JC
Date	21 NOV 08
Job Number	27010.00

WALL SECTIONS

A8.2

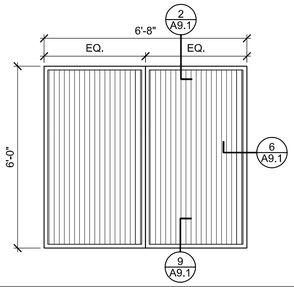

1 ELEVATION GRATE NORTH ELEVATION
SCALE: 1/2" = 1'-0"

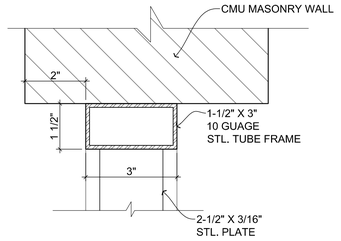

2 SECTION DETAIL GRATE SHADE SYSTEM
SCALE: 6" = 1-0"

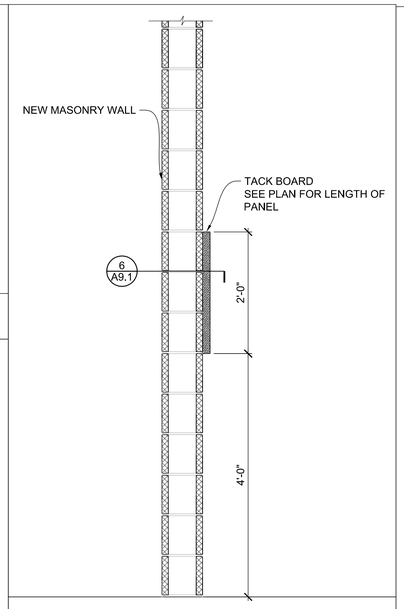

5 TYP. TACK BOARD
SCALE: 1" = 1'-0"

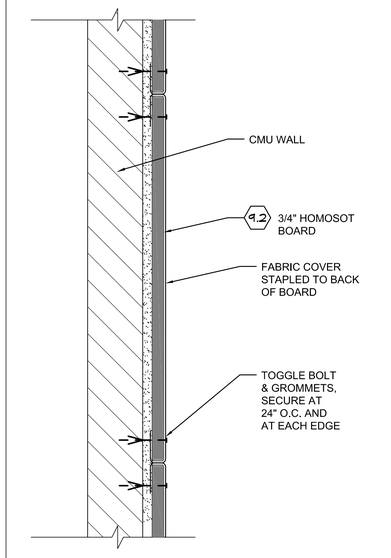

6 TACK BOARD DETAIL
SCALE: 3"=1'-0"

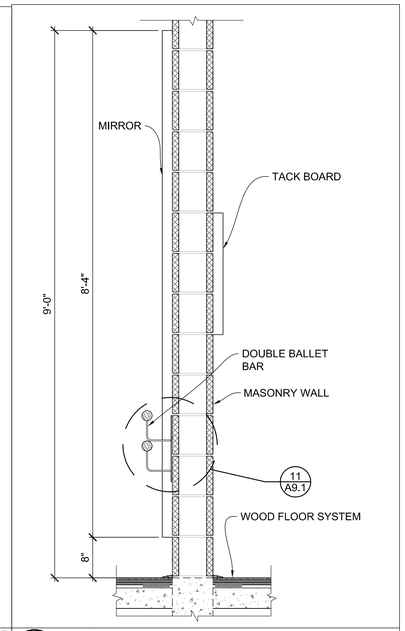

7 SECTION @ MIRROR WALL
SCALE: 1" = 1'-0"

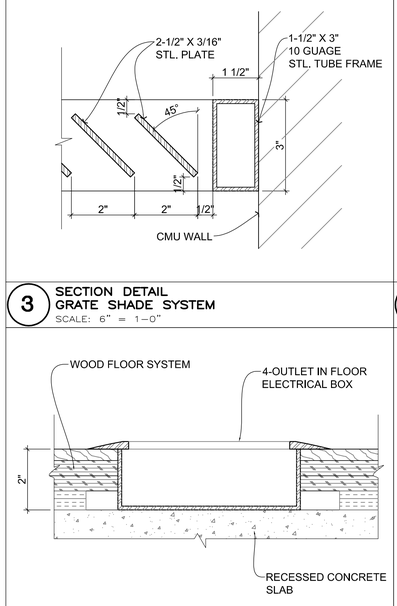

3 SECTION DETAIL GRATE SHADE SYSTEM
SCALE: 6" = 1-0"

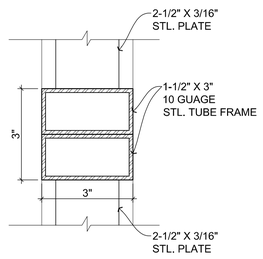

4 SECTION DETAIL MULLION WEST GRATE SYSTEM
SCALE: 6" = 1-0"

8 ELECTRICAL FLOOR BOX DETAIL
SCALE: 6" = 1-0"

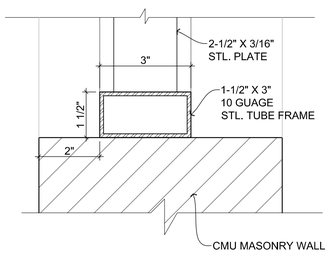

9 SECTION DETAIL GRATE SHADE SYSTEM
SCALE: 6" = 1-0"

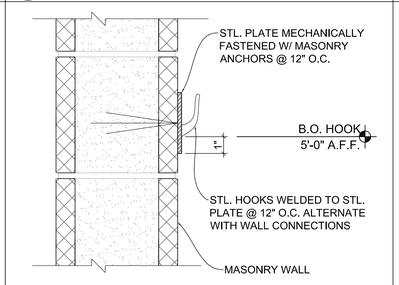

10 COAT HOOK DETAIL
SCALE: 3" = 1'-0"

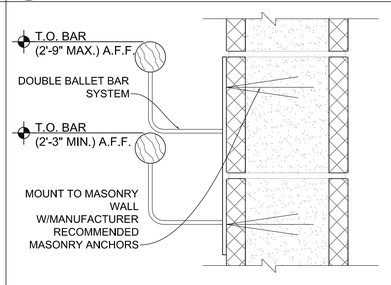

11 DETAIL @ BALLET BAR
SCALE: 3" = 1'-0"

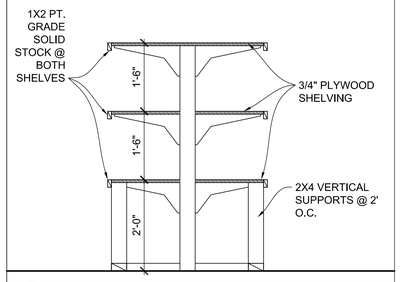

12 SECTION DETAIL OPEN SHELVING
SCALE: 3/4" = 1'-0"

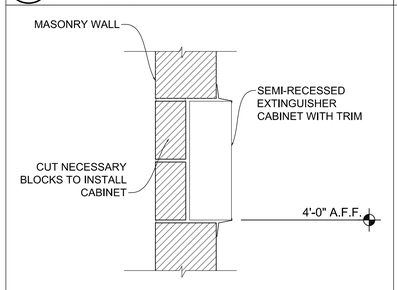

13 EXTINGUISHER CABINET
SCALE: 1-1/2" = 1'-0"

GRESHAM BEACH
ARCHITECTS INC.
177 NORTH CHURCH AVENUE
SUITE 755
TUCSON, ARIZONA. 85701
TEL.520.882.0698
FAX.520.882.0989

95% CONSTRUCTION DOCUMENTS NOT FOR CONSTRUCTION

CITY OF TUCSON
FACILITIES DESIGN & MANAGEMENT DIVISION

EL PUEBLO ACTIVITY CENTER

5100 S. MISSIONDALE RD.
TUCSON, AZ

REVISIONS

Number	Date	By

Designed	RAB/JC
Drawn	MLN
Checked	JC
Date	21 NOV 08
Job Number	27010.00

MISC. DETAILS

A9.1

OF

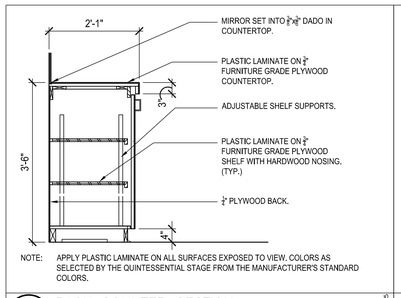

1 BACK COUNTER SECTION
SCALE: 3/4"=1'-0"
6-MBAS-05

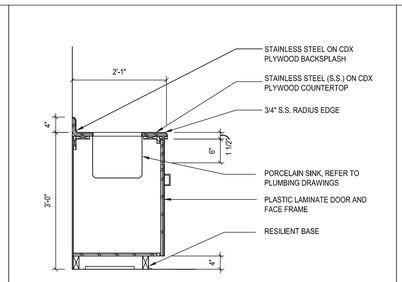

2 BASE CABINET WITH SINK – CAST ROOM
SCALE: 3/4"=1'-0"
6-MBAS-16

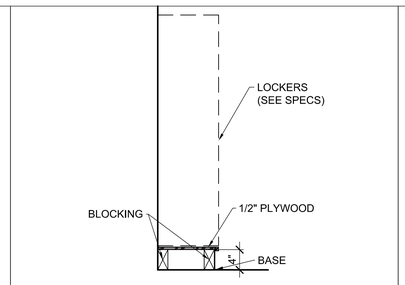

3 LOCKER BASE DETAIL
SCALE: 1"=1'-0"
10-BLKR-05

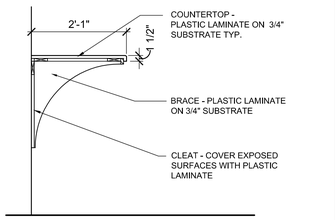

4 COUNTER – OPEN BELOW
SCALE: 3/4"=1'-0"
6-MBAS-19

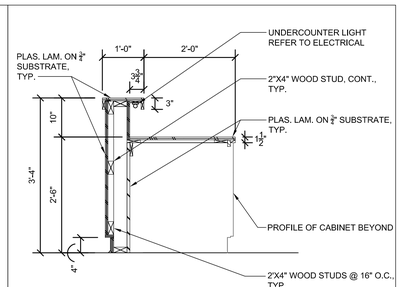

5 RECEPTION DESK OPEN BELOW
SCALE: 3/4"=1'-0"
6-MCTR-06

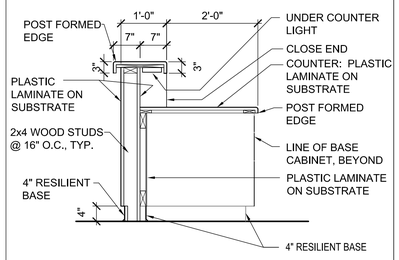

6 COUNTER BASE WITH TRANSACTION TOP
SCALE: 3/4"=1'-0"
6-MCTR-04

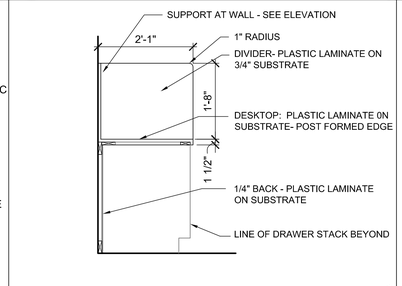

7 KNEE SPACE WITH DIVIDER
SCALE: 3/4"=1'-0"
6-MDSK-044

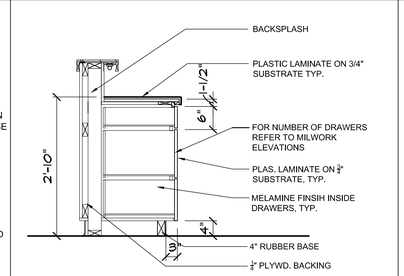

8 BASE CABINET WITH DRAWERS
SCALE: 3/4"=1'-0"
6-MBAS-03

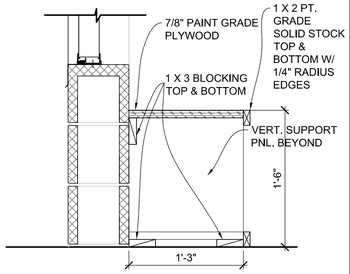

9 SEATING/ STORAGE DANCE – MUSIC
SCALE: 1–1/2" = 1'–0"

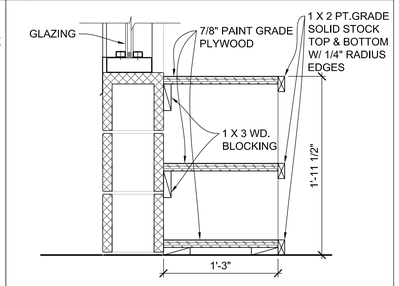

10 STORAGE SHEVLING @ CERAMICS
SCALE: 1–1/2" = 1'–0"

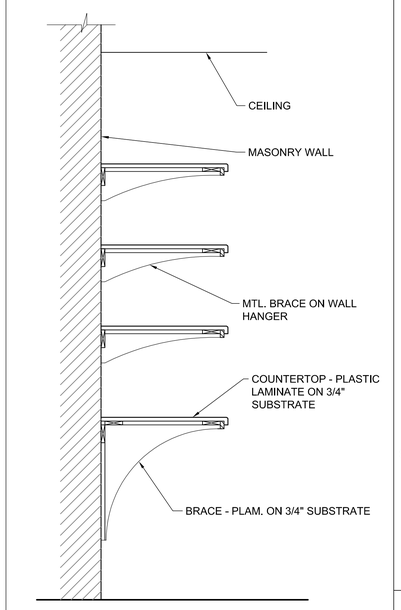

13 COUNTER/ SHELVING @ KILN ROOM
SCALE: 1" = 1'–0"

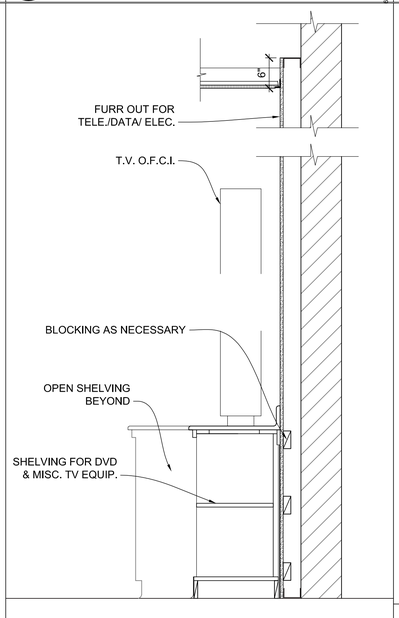

14 TEEN ROOM 142 TV COUNTER
SCALE: 1" =1'–0"

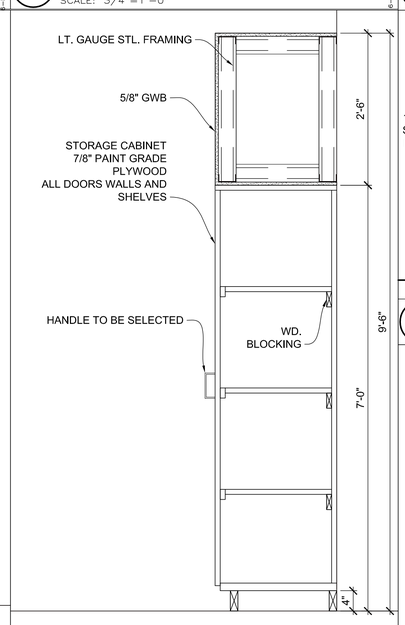

15 STORAGE CABINET/ SOFFIT MUSIC 143
SCALE: 1" = 1'–0"

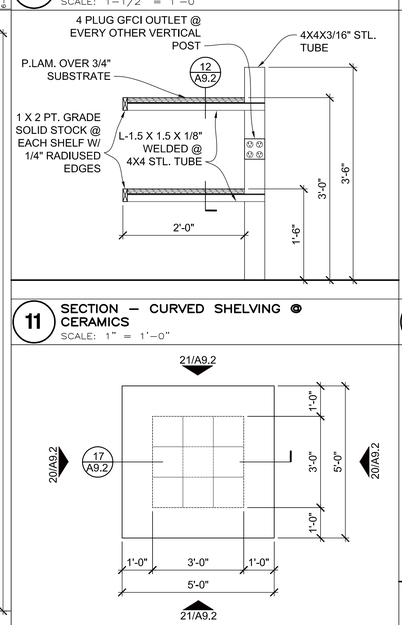

11 SECTION – CURVED SHELVING @ CERAMICS
SCALE: 1" = 1'–0"

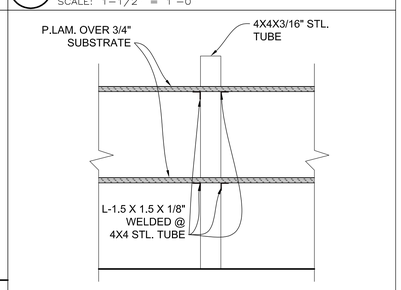

12 STORAGE SHEVLING @ CERAMICS
SCALE: 1" = 1'–0"

16 PLAN VIEW CERAMICS WORK TABLE/ LOCKERS
SCALE: 1/2" = 1'–0"

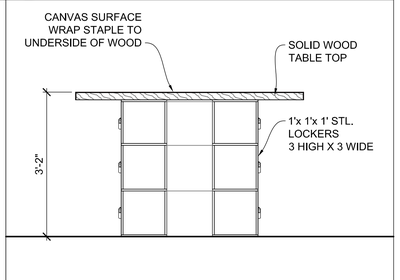

17 SECTION DETAIL WORK TABLE/ LOCKERS
SCALE: 3/4" = 1'–0"

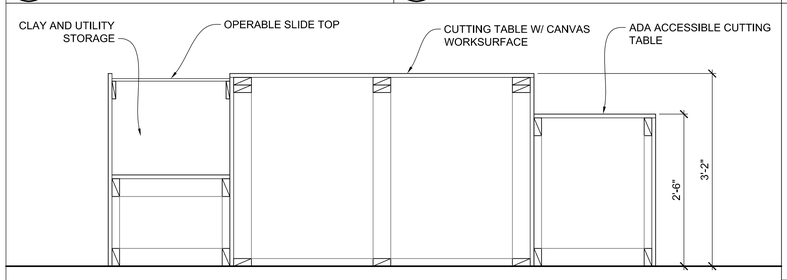

18 SECTION DETAIL CUTTING TABLE @ CERAMICS
SCALE: 1" = 1'–0"

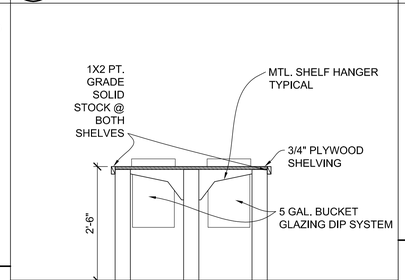

19 SECTION DETAIL GLAZING STAND
SCALE: 3/4" = 1'–0"

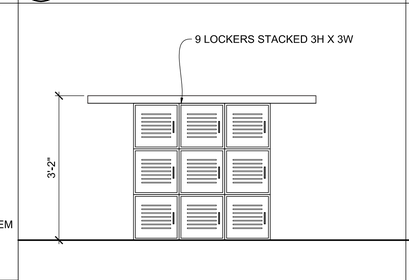

20 ELEVATION WORKTABLE WITH 9 LOCKERS
SCALE: 3/4" = 1'–0"

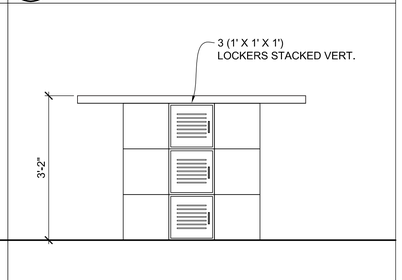

21 ELEVATION WORKTABLE W/ THREE LOCKERS
SCALE: 3/4" = 1'–0"

GRESHAM BEACH
ARCHITECTS INC.
177 NORTH CHURCH AVENUE
SUITE 755
TUCSON, ARIZONA, 85701
TEL:520.882.0698
FAX:520.882.0989

95% CONSTRUCTION DOCUMENTS NOT FOR CONSTRUCTION

CITY OF TUCSON
FACILITIES DESIGN & MANAGEMENT DIVISION
EL PUEBLO ACTIVITY CENTER
5100 S. MISSIONDALE RD.
TUCSON, AZ

REVISIONS

Number	Date	By

Designed	RAB/JC
Drawn	MLN
Checked	JC
Date	21 NOV 08
Job Number	27010.00

MILLWORK DETAILS

A9.2

OF

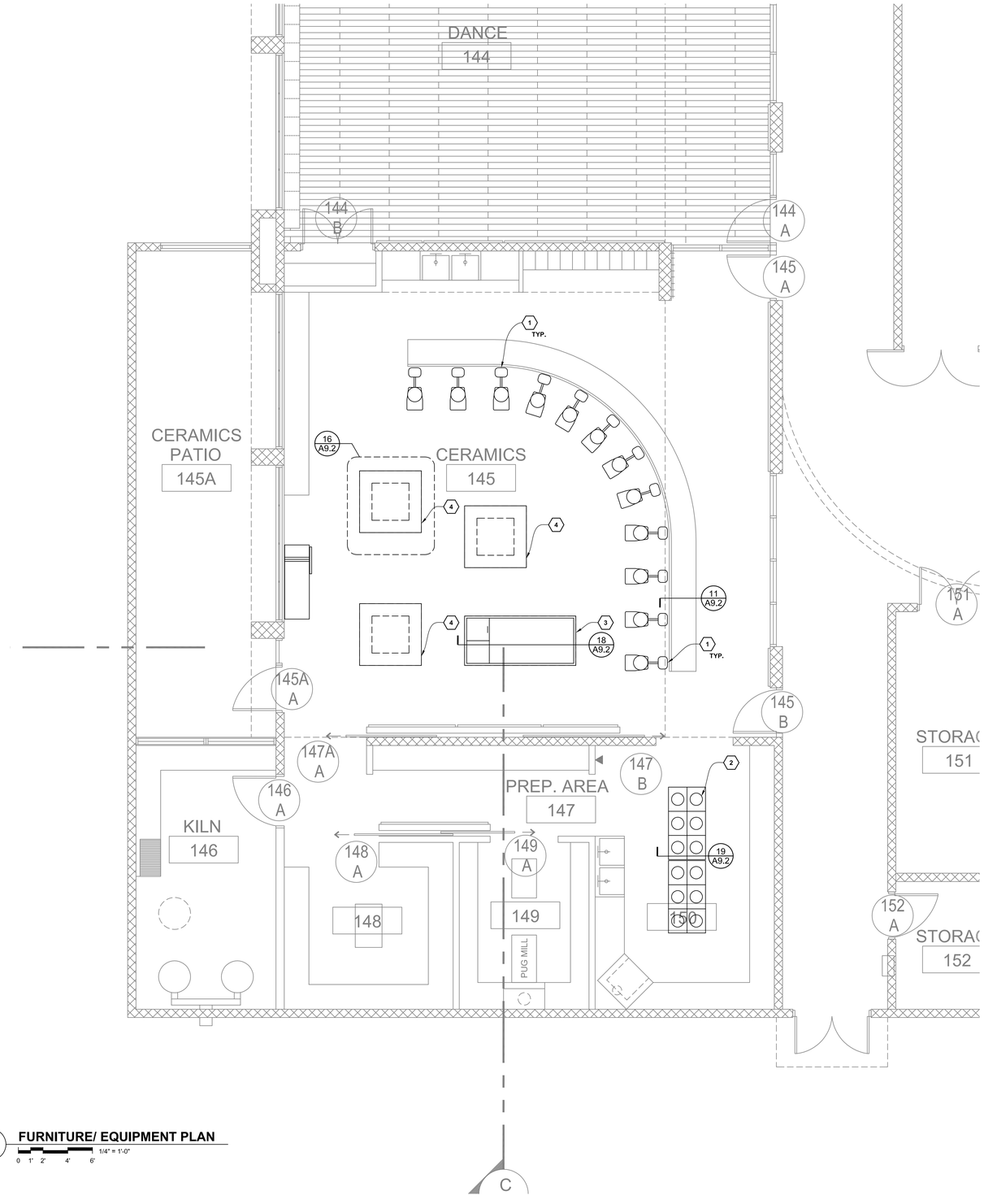

KEYNOTES

1. POTTERY WHEEL
2. GLAZING STATION
3. CUTTING TABLE
4. 5' X 5' TABLE TOP OVER STORAGE LOCKERS

1 FURNITURE/ EQUIPMENT PLAN

1/4" = 1'-0"

0 1' 2' 4' 6'

GRESHAM BEACH
ARCHITECTS INC.
177 NORTH CHURCH AVENUE
SUITE 755
TUCSON . ARIZONA . 85701
TEL.520.882.0698
FAX.520.882.0989

95% CONSTRUCTION DOCUMENTS NOT FOR CONSTRUCTION

CITY OF TUCSON
FACILITIES DESIGN & MANAGEMENT DIVISION
EL PUEBLO ACTIVITY CENTER
5100 S. MISSIONDALE RD.
TUCSON, AZ

REVISIONS

Number	Date	By

Designed	RAB/JC
Drawn	MLN
Checked	JC
Date	21 NOV 08
Job Number	27010.00

FURNITURE PLAN

IA1.1

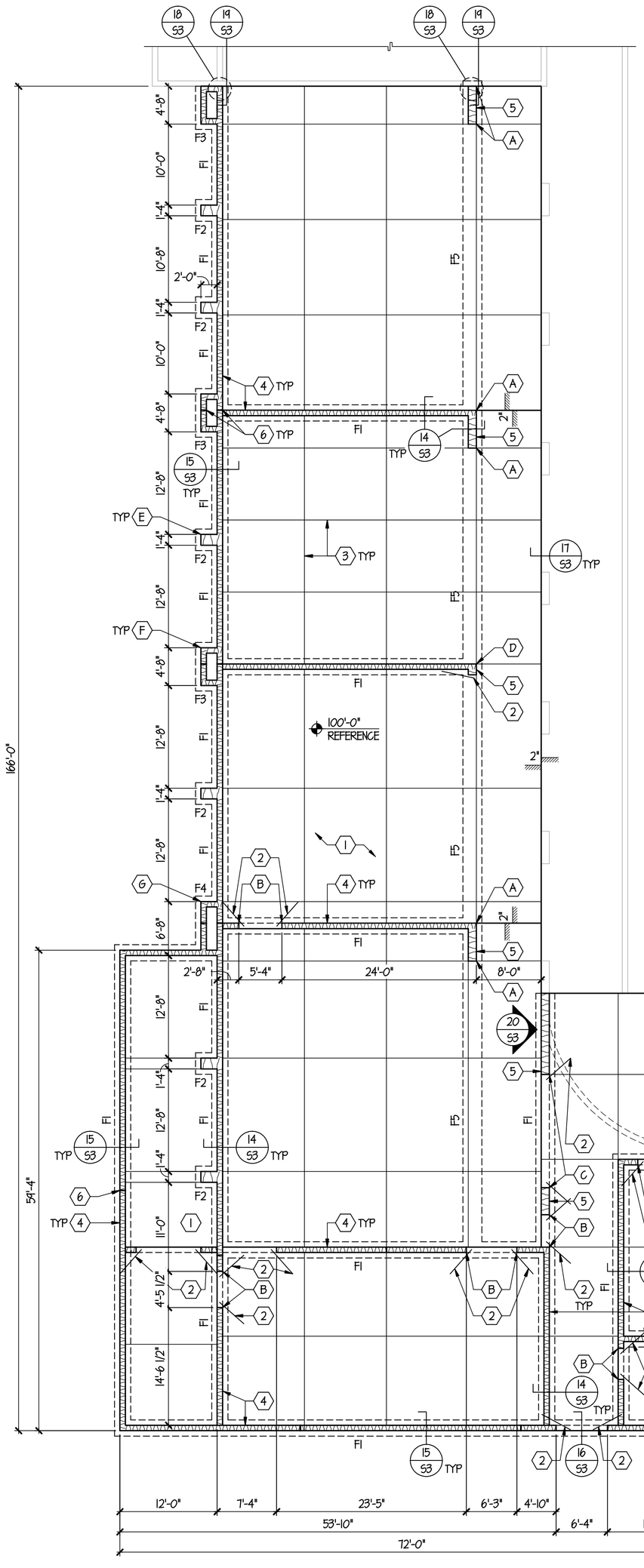

FOUNDATION PLAN NOTES

1. VERIFY ALL DIMENSIONS & ELEVATIONS WITH ARCHITECTURAL DRAWINGS AND SITE SURVEY PRIOR TO START OF WORK. RESOLVE ANY DISCREPANCY WITH ARCHITECT. SEE ARCHITECTURAL DRAWINGS FOR DIMENSIONS AT DOORS, WINDOWS, RECESSES, REVEALS, AND DIMENSIONS NOT SHOWN.
2. FOR CLARITY, EXTERIOR SLABS AND SIDEWALKS MAY NOT BE SHOWN. FOR EXACT DIMENSIONS, LOCATIONS, JOINTS & SCORE LINES - SEE ARCHITECTURAL DRAWINGS.
3. C.J. - AS SHOWN ON PLAN INDICATES CONTROL JOINT OR CONSTRUCTION JOINT IN CONCRETE SLAB ON GRADE. SEE TYPICAL DETAIL.
4. PROVIDE 4" THICK AGGREGATE BASE COURSE (ABC) BENEATH ALL INTERIOR CONCRETE SLABS ON GRADE.
5. ALL CONTINUOUS WALL FOOTINGS SHALL BE 2'-0" WIDE AND 10" THICK UNLESS NOTED OTHERWISE ON PLANS.
6. MASONRY WALL VERTICAL REINFORCING SHALL BE #5 VERTICAL AT 32" O.C. IN 8" MASONRY WALLS AND #6 VERTICAL AT 32" O.C. IN 12" MASONRY WALLS, TYPICAL UNLESS NOTED OTHERWISE.

FOOTING SCHEDULE

MARK	SIZE	REINFORCEMENT	TOP OF FTG (T.O.F.) ELEVATION U.N.O.
F1	2'-0" X 1'-0" CONT	3 - #5 CONT	98'-6"
F2	2'-8" X 3'-4" X 1'-0"	#5 @ 12" O.C., EA WAY, T & B	98'-6"
F3	6'-0" X 3'-4" X 1'-0"	#5 @ 12" O.C., EA WAY, T & B	98'-6"
F4	8'-0" X 3'-4" X 1'-0"	#5 @ 12" O.C., EA WAY, T & B	98'-6"
F5	2'-6" X 1'-0" CONT	3 - #5 CONT	98'-6"

NOTE
LOWER B.O.F. ELEVATION AS REQUIRED TO MAINTAIN 2'-0" MINIMUM BEARING DEPTH.
F1002

FOUNDATION KEYNOTES

1. 4" THICK CONCRETE SLAB ON GRADE.
2. 2- #4 X 4'-0" LONG PLACED AT MID-DEPTH OF SLAB. TYPICAL AT ALL RE-ENTRANT CORNERS OF SLAB ON GRADE.
3. C.J. OR C.T.J. SEE 6/S3
4. 8" CMU WALL
5. 12" CMU WALL
6. MASONRY CONTROL JOINT. SEE 7/S3

A — 12", 4", 2- #6 IN FIRST CELL

B — 8", 5 3/8", 2- #5 IN FIRST CELL

C — 5 3/4", 8", 4- #5 IN FIRST 2 CELLS

D — 8", 4- #5 VERTS W/ #2 TIES @ 8" O.C., ℄ JOISTS, 12"

E — 1'-4", 2'-0", 8- #5 VERTS W/ #2 TIES @ 8" O.C., GROUT ALL CELLS SOLID IN PIER, ℄ LINTEL

F — 4'-8", 2'-0", 8- #5 VERTS W/ #3 TIES @ 16" O.C., GROUT ALL CELLS SOLID IN PIER, M.C.J, ℄ LINTEL

6 — 6'-8", 2'-0", 10 - #5 VERTS W/ #3 TIES @ 16" O.C., GROUT ALL CELLS SOLID IN PIER, M.C.J, ℄ LINTEL

N

FOUNDATION PLAN

SCALE 1/8" = 1'-0"

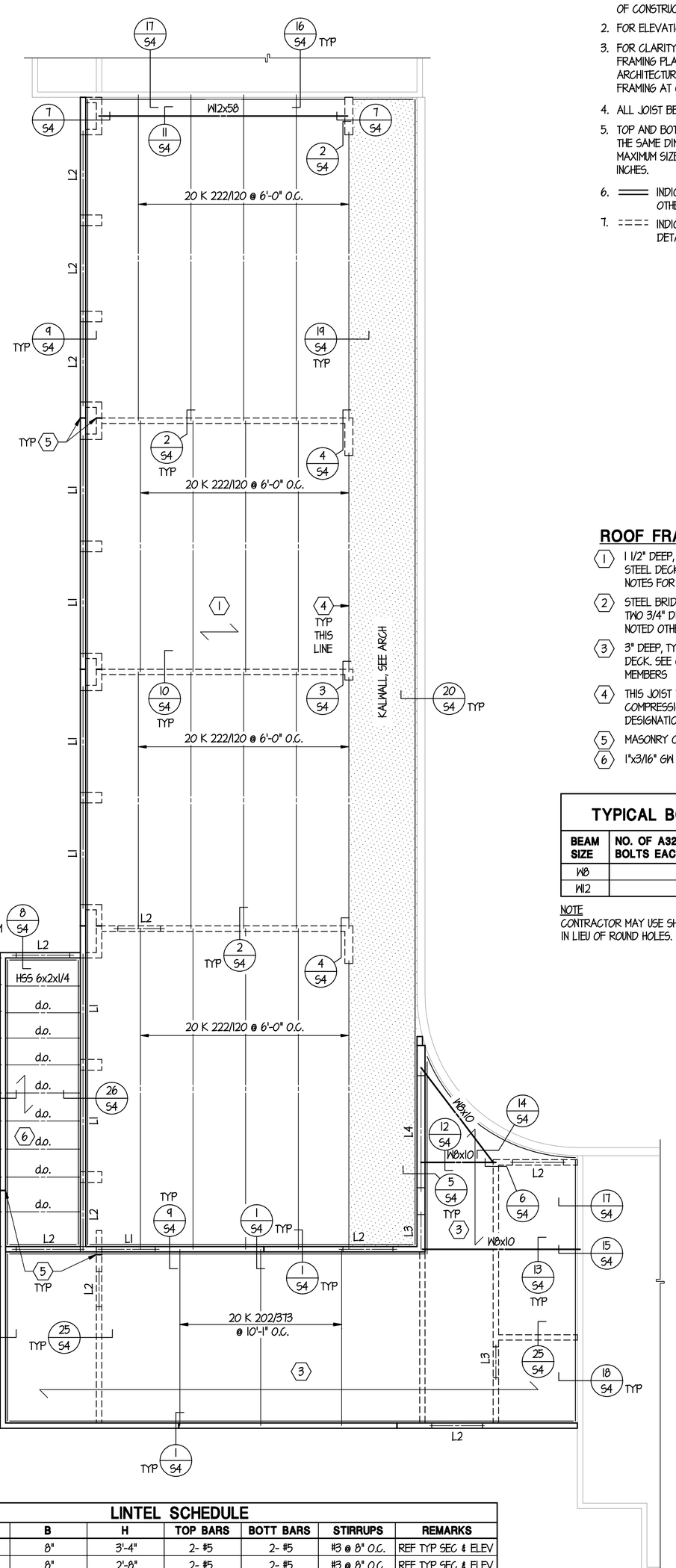

ROOF FRAMING PLAN NOTES

1. FOR DIMENSIONS, SEE FOUNDATION PLAN AND ARCHITECTURAL DRAWINGS. VERIFY ALL DIMENSIONS & ELEVATIONS WITH A SITE SURVEY PRIOR TO START OF CONSTRUCTION - RESOLVE ANY DISCREPANCY WITH ARCHITECT.
2. FOR ELEVATIONS, SEE ARCHITECTURAL DRAWINGS.
3. FOR CLARITY, ALL ROOF AND FLOOR OPENINGS MAY NOT BE SHOWN ON FRAMING PLANS. FOR EXACT SIZE, NUMBER AND LOCATION OF OPENINGS - SEE ARCHITECTURAL, MECHANICAL, ELECTRICAL AND PLUMBING DRAWINGS. FOR FRAMING AT OPENINGS, SEE TYPICAL DETAILS.
4. ALL JOIST BEARING SHOE HEIGHT SHALL BE 2 1/2 INCHES.
5. TOP AND BOTTOM CHORD MEMBERS OF ALL JOIST GIRDERS SHALL BE THE SAME DIMENSIONALLY. THICKNESS OF ANGLES MAY VARY. MAXIMUM SIZE SHALL BE 2- L 3 X 3 ANGLES WITH OVERALL WIDTH OF 7 INCHES.
6. ═══ INDICATES WALL EXTENDING UP PAST DECK LEVEL UNLESS NOTED OTHERWISE ON PLANS.
7. ═ ═ ═ INDICATES WALL THAT RUNS TO UNDERSIDE OF THE ROOF FRAMING. SEE DETAILS FOR ATTACHMENT TO ROOF FRAMING.

ROOF FRAMING KEYNOTES

1. 1 1/2" DEEP, TYPE "B", 20 GAGE (VULCRAFT 1.5B20 OR EQUAL), GALVANIZED STEEL DECK THREE SPAN MINIMUM CONTINUOUS. SEE GENERAL STRUCTURAL NOTES FOR CONNECTION TO SUPPORTING MEMBERS
2. STEEL BRIDGING - BY JOIST MANUFACTURER. ATTACH BRIDGING TO WALL WITH TWO 3/4" DIAMETER HEADED STUD ANCHORS IN FULLY GROUTED CELL UNLESS NOTED OTHERWISE
3. 3" DEEP, TYPE "N", 20 GAGE (VULCRAFT 3N20 OR EQUAL), GALVANIZED STEEL DECK. SEE GENERAL STRUCTURAL NOTES FOR CONNECTION TO SUPPORTING MEMBERS
4. THIS JOIST TO BE DESIGNED FOR 14.1 KIPS AXIAL LOAD (TENSION OR COMPRESSION) IN TOP CHORD IN ADDITION TO LOADS SHOWN ON JOIST DESIGNATION
5. MASONRY CONTROL JOINT. SEE 7/S3
6. 1"x3/16" GW BAR GRATING, SEE ARCH DWG'S

TYPICAL BOLT AND SHEAR PLATE SCHEDULE

BEAM SIZE	NO. OF A325 - N 3/4" DIAMETER BOLTS EACH VERT ROW	HEIGHT	THICKNESS	WELD SIZE (U.N.O.)
W8	2	5 1/2"	3/8"	1/4
W12	3	8 1/2"	3/8"	1/4

NOTE
CONTRACTOR MAY USE SHORT SLOTTED HOLES CONFORMING TO A325 BOLT SPECIFICATIONS IN LIEU OF ROUND HOLES. PROVIDE HARDENED WASHERS FOR ALL BOLTS IN SLOTTED HOLES.
S1000

LINTEL SCHEDULE

MARK	TYPE	B	H	TOP BARS	BOTT BARS	STIRRUPS	REMARKS
L1	C.M.U.	8"	3'-4"	2- #5	2- #5	#3 @ 8" O.C.	REF TYP SEC & ELEV
L2	C.M.U.	8"	2'-8"	2- #5	2- #5	#3 @ 8" O.C.	REF TYP SEC & ELEV
L3	C.M.U.	8"	1'-4"	2- #5	2- #5	#3 @ 8" O.C.	REF TYP SEC & ELEV
L4	C.M.U.	8"	4'-0"	2- #5	2- #5	#3 @ 8" O.C.	REF TYP SEC & ELEV

M2000

N

ROOF FRAMING PLAN

SCALE 1/8" = 1'-0"

GRESHAM BEACH ARCHITECTS INC.
177 NORTH CHURCH AVENUE
SUITE 755
TUCSON, ARIZONA 85701
TEL.520.882.0698
FAX.520.882.0989

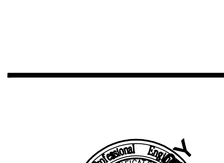

EXPIRES 6/30/2010

STRUCTURAL CONCEPTS INC.
CONSULTING ENGINEERS
(520) 721-2324
(520) 885-3507 FAX
2230 E. BROADWAY SUITE W-7
TUCSON, ARIZONA 85719

CITY OF TUCSON
FACILITIES DESIGN & MANAGEMENT DIVISION

EL PUEBLO ACTIVITY CENTER

5100 S. MISSIONDALE RD.
TUCSON, AZ

REVISIONS

Number	Date	By

Designed	GRS
Drawn	JCR
Checked	GRS
Date	10/29/08
Job Number	27010.00

S1

GENERAL STRUCTURAL NOTES
(TYPICAL UNLESS NOTED OTHERWISE)

GENERAL
1. ALL WORK SHALL CONFORM TO THE REQUIREMENTS OF THE INTERNATIONAL BUILDING CODE (IBC), 2006 EDITION, WITH CITY OF TUCSON / PIMA COUNTY MODIFICATIONS.
2. DESIGN LOADS

   LIVE LOADS:
   FLAT ROOF 20 PSF (REDUCIBLE)

   DEAD LOADS:
   FLAT ROOF 17 PSF

   WIND LOAD:
   IBC 2006 / ASCE 7-05
   BASIC WIND SPEED = 90 MPH (3 SECOND GUST)
   EXPOSURE B
   IMPORTANCE FACTOR: Iw = 1.0

   SEISMIC LOAD:
   IBC 2006 / ASCE 7-05
   OCCUPANCY CATEGORY II
   IMPORTANCE FACTOR: Ie = 1.0
   SITE CLASS D
   Sds = .339
   Sd1 = .141
   SEISMIC DESIGN CATEGORY C
   R = 3.5
   Cs = Sds / (R/Ie) = .097
   V = Csw = .097 W
3. CONSTRUCTION MATERIAL SHALL BE SPREAD OUT IF PLACED ON FRAMING FOR FLOORS OR ROOF. LOAD SHALL NOT EXCEED THE DESIGN LIVE LOAD PER SQUARE FOOT.
4. CONTRACTOR SHALL VERIFY ALL DIMENSIONS AND CONDITIONS AT THE JOB SITE PRIOR TO BEGINNING WORK AND SHALL REPORT ANY DISCREPANCIES TO THE ARCHITECT.
5. REFER TO SITE PLAN AND ARCHITECTURAL DRAWINGS FOR LOCATION AND DETAILS OF SITE WORK ITEMS NOT SHOWN ON STRUCTURAL DRAWINGS.
6. OMISSIONS OR CONFLICTS BETWEEN VARIOUS ELEMENTS OF THE DRAWINGS, NOTES, AND DETAILS SHALL BE BROUGHT TO THE ATTENTION OF THE ARCHITECT AND RESOLVED BEFORE PROCEEDING WITH THE WORK.
7. DO NOT USE SCALED DIMENSIONS. USE WRITTEN DIMENSIONS OR WHERE NO DIMENSION IS PROVIDED, CONSULT THE ARCHITECT BEFORE PROCEEDING WITH THE WORK.
8. ESTABLISH AND VERIFY THE SIZE AND LOCATION OF ALL BLOCKOUTS, INSERTS, OPENINGS, CURBS, BASES AND PADS FOR ARCHITECTURAL, MECHANICAL, ELECTRICAL AND PLUMBING WITH APPROPRIATE TRADE, DRAWINGS AND SUBCONTRACTORS PRIOR TO CONSTRUCTION.
9. ALL DETAILS SHOWN APPLY WHETHER SPECIFICALLY REFERENCED OR NOT.
10. TYPICAL DETAILS ARE NOT CUT ON DRAWINGS, BUT APPLY UNLESS NOTED OTHERWISE. WHERE NO SPECIFIC DETAILS ARE SHOWN, CONSTRUCTION SHALL CONFORM TO SIMILAR WORK ON THE PROJECT.
11. OPTIONS, IF INDICATED, ARE FOR THE CONTRACTOR'S CONVENIENCE. HE SHALL BE RESPONSIBLE FOR ALL NECESSARY CHANGES IF HE CHOOSES AN OPTION AND SHALL COORDINATE ALL DETAILS.
12. ANY ENGINEERING DESIGN PROVIDED BY OTHERS AND SUBMITTED FOR REVIEW SHALL BEAR THE SEAL OF A STRUCTURAL ENGINEER REGISTERED IN ARIZONA.
13. THE CONTRACT STRUCTURAL DRAWINGS AND SPECIFICATIONS REPRESENT THE FINISHED STRUCTURE. THEY DO NOT INDICATE THE METHOD OF CONSTRUCTION. THE CONTRACTOR SHALL PROVIDE ALL NECESSARY MEASURES TO PROTECT THE STRUCTURE DURING CONSTRUCTION. SUCH MEASURES SHALL INCLUDE, BUT NOT BE LIMITED TO, BRACING AND SHORING OF LOADS DUE TO CONSTRUCTION EQUIPMENT, BACKFILL, AND WIND.

FOUNDATION AND EARTHWORK
1. ASSUMED SOIL PARAMETERS ARE AS FOLLOWS:
2. ALLOWABLE DESIGN SOIL BEARING PRESSURE IS 1500 PSF AT 1'-6" MINIMUM BEARING DEPTH.
3. ALL BOTTOM OF FOOTING ELEVATONS SHALL BE A MINIMUM OF 1'-6" BELOW ADJACENT GRADE ELEVATION OR FINISHED FLOOR ELEVATION, WHICHEVER IS LOWEST. FOUNDATIONS SHALL BEAR UPON ENGINEERED FILL OR UNDISTURBED SOIL PER SOILS REPORT.
4. ALL FOOTINGS SHALL EXTEND 12" BEYOND THE END OF NON-CONTINUOUS WALLS.
5. FLOOR SLAB BASE SHALL BE 4 INCHES THICK AGGREGATE BASE COURSE.
6. ALL EXTERIOR FINISHED GRADES SHALL SLOPE TO DRAIN FROM BUILDING WALLS TO ELIMINATE WATER POOLS ADJACENT TO BUILDING FOUNDATIONS.
7. ALL ABANDONED UTILITIES, FOOTINGS, ETC. THAT INTERFERE WITH NEW CONSTRUCTION SHALL BE REMOVED.
8. ALL EXCAVATIONS SHALL BE PROPERLY BACKFILLED. DO NOT BACKFILL BEHIND RETAINING WALLS BEFORE CONCRETE OR GROUT HAS ATTAINED FULL DESIGN STRENGTH.
9. THE OWNER OR ARCHITECT SHALL SUBMIT A FINAL SET OF STRUCTURAL AND ARCHITECTURAL DRAWINGS TO THE GEOTECHNICAL ENGINEER FOR REVIEW PRIOR TO THE START OF CONSTRUCTION. THE GEOTECHNICAL ENGINEER SHALL INSPECT AND APPROVE ALL EXCAVATIONS PRIOR TO CONCRETE PLACEMENT.

CONCRETE
1. ALL CONCRETE SHALL BE READY MIXED CONFORMING TO ASTM C-94. TYPE II PORTLAND CEMENT SHALL BE USED FOR ALL CONCRETE. THE FOLLOWING MINIMUM STRENGTH AT 28 DAYS SHALL BE ATTAINED.

   FOUNDATIONS, STEM WALLS 3000 PSI
   SLABS ON GRADE, SIDEWALKS 3000 PSI
2. THE FOLLOWING LATEST EDITIONS OF ACI STANDARDS OF RECOMMENDED PRACTICE SHALL APPLY TO ALL CONCRETE WORK.
   A. ACI 318 CODE REQUIREMENTS FOR REINFORCED CONCRETE.
   B. ACI 301 SPECIFICATIONS FOR STRUCTURAL CONCRETE FOR BUILDINGS.
3. ALL CONCRETE SHALL HAVE A MINIMUM CEMENT CONTENT OF 5 SACKS PER CUBIC YARD. SLUMP SHALL NOT BE MORE THAN 4 INCHES. ANY DEVIATIONS FROM THESE REQUIREMENTS SHALL BE MADE ONLY WITH THE APPROVAL OF THE ENGINEER.
4. FLY ASH, IF PERMITTED BY ARCHITECTURAL SPECIFICATIONS, SHALL BE LIMITED TO 15 PERCENT OF CEMENTITIOUS MATERIALS AND SHALL HAVE A REPLACEMENT FACTOR OF 1.2 RELATIVE TO THE CEMENT REPLACED. FLY ASH SHALL NOT BE USED IN FLATWORK OR ARCHITECTURALLY EXPOSED CONCRETE.
5. CONCRETE SHALL NOT BE DROPPED MORE THAN FOUR FEET VERTICALLY.
6. MECHANICALLY VIBRATE ALL CONCRETE WHEN PLACED EXCEPT SLABS ON GRADE, 4 INCHES OR LESS IN THICKNESS, NEED BE VIBRATED ONLY AT AREAS OF REINFORCEMENT, THICKENED AREAS AND ADJACENT TO PENETRATIONS.
7. CONCRETE FOOTINGS AND PADS MAY BE POURED AGAINST NEAT EXCAVATIONS, PROVIDED PLAN DIMENSIONS ARE ADHERED TO.
8. ALL REINFORCING BARS, DOWELS, ANCHOR BOLTS, AND OTHER CONCRETE INSERTS SHALL BE SECURED IN POSITION PRIOR TO PLACING CONCRETE.
9. PROVIDE 3/4 INCH CHAMFER ON ALL EXPOSED EDGES OF BEAMS, COLUMNS, WALLS, ETC. UNLESS NOTED OTHERWISE IN DRAWINGS.
10. PROVIDE SLEEVES FOR PLUMBING AND ELECTRICAL OPENINGS IN CONCRETE PRIOR TO PLACING CONCRETE. DO NOT CUT ANY REINFORCING WHICH MAY CONFLICT. CORING OF CONCRETE IS NOT PERMITTED. NOTIFY THE ARCHITECT IN ADVANCE OF CONSTRUCTION OF CONDITIONS NOT SHOWN ON DRAWINGS.
11. PROVIDE 1/2 INCH PREFORMED JOINT FILLER WHERE EXTERIOR SLAB ABUTS VERTICAL SURFACES, TYPICAL, UNLESS NOTED OTHERWISE.
12. OPENINGS, POCKETS, ETC. SHALL NOT BE PLACED IN CONCRETE SLABS, WALLS, BEAMS, JOISTS, COLUMNS, ETC. UNLESS SPECIFICALLY DETAILED ON THE STRUCTURAL DRAWINGS. NOTIFY THE STRUCTURAL ENGINEER, PRIOR TO CONSTRUCTION, WHEN DRAWINGS BY OTHERS SHOW OPENINGS, POCKETS, ETC. WHICH ARE NOT SHOWN ON THE STRUCTURAL DRAWINGS, BUT WHICH ARE THOUGHT TO BE REQUIRED IN STRUCTURAL MEMBERS.
13. CONDUIT, PLUMBING, ETC. SHALL NOT BE CAST IN CONCRETE UNLESS SPECIFICALLY INDICATED ON THE STRUCTURAL DRAWINGS.
14. CONCRETE TESTING SHALL BE DONE IN CONFORMANCE WITH IBC SECTION 1905.6.
15. CONCRETE CURING SHALL BE PERFORMED IN CONFORMANCE WITH IBC SECTION 1905.11.
16. NO CONSTRUCTION JOINTS (OTHER THAN THOSE SHOWN ON DRAWINGS) SHALL BE INSTALLED WITHOUT APPROVAL OF THE ENGINEER.
17. IF CONTROL/CONSTRUCTION JOINTS ARE NOT LOCATED ON THE PLAN FOR CONCRETE SLABS ON GRADE, THE AREA ENCLOSED BY CONTROL JOINTS, EITHER KEYED OR SAW CUT, SHALL NOT EXCEED 225 SQUARE FEET UNLESS SHOWN OTHERWISE. KEYED CONSTRUCTION JOINTS NEED ONLY BE PROVIDED AT THE EXPOSED EDGES DURING CONSTRUCTION. OTHER JOINTS MAY BE PROVIDED AS SAW CUT.
18. PROVIDE "FIBERMESH" POLYPROPYLENE FIBERS IN CONCRETE FOR ALL SLABS ON GRADE. MINIMUM CONCENTRATION SHALL BE 1.5 POUNDS OF FIBERMESH PER CUBIC YARD OF CONCRETE.
19. CONTRACTOR SHALL SUBMIT MIX DESIGNS WITH CORRESPONDING PRIOR TEST RESULTS FOR EACH MIX DESIGN. THE USE/LOCATIONS FOR EACH CONCRETE MIX DESIGN SHALL BE CLEARLY IDENTIFIED.

REINFORCING STEEL
1. REINFORCING STEEL SHALL CONFORM TO ASTM SPECIFICATION A615, GRADE 40 FOR #3 REBAR AND SMALLER AND GRADE 60 FOR #4 REBAR AND LARGER UNLESS NOTED OTHERWISE.
2. ALL REINFORCING STEEL TO BE WELDED SHALL CONFORM TO ASTM SPECIFICATION A706. WELDING ELECTRODES FOR REINFORCING STEEL SHALL BE E90XX, UNLESS NOTED OTHERWISE.
3. WELDED WIRE FABRIC SHALL CONFORM TO ASTM SPECIFICATION A185 AND SHALL HAVE MINIMUM YIELD STRENGTH OF 65000 P.S.I.
4. UNLESS NOTED OTHERWISE ON THE DRAWINGS, THE MINIMUM CLEAR COVER FOR REINFORCEMENT SHALL BE AS FOLLOWS:

   CONCRETE CAST AGAINST EARTH – 3"
   CONCRETE TO BE IN CONTACT WITH EARTH OR WEATHER:
   BARS GREATER THAN #5 – 2"
   BARS #5 OR LESS – 1 1/2"
   CONCRETE NOT TO BE EXPOSED TO GROUND, WEATHER OR LIQUID:
   BEAMS AND COLUMNS – 1 1/2"
   SLABS, WALLS AND JOISTS – 3/4"
5. ALL REINFORCING STEEL SHALL BE ACCURATELY PLACED, ANCHORED, AND SUPPORTED BY CHAIRS, SPACERS, POSITIONERS OR HANGERS.
6. PROVIDE BENT CORNER BARS TO MATCH AND LAP WITH HORIZONTAL BARS AT CORNERS AND INTERSECTIONS OF FOOTINGS, STEM WALLS, WALLS AND BEAMS.
7. UNLESS NOTED OTHERWISE, HORIZONTAL TIES AND BARS IN STEMWALLS AND PEDESTALS SHALL BEGIN AT ONE-HALF THE SPECIFIED TYPICAL SPACING ABOVE TOP OF FOOTING.
8. ALL REINFORCING IN CONCRETE SHALL BE CONTINUOUS OR LAPPED AS PER ACI 318. IF SPLICING OF THE BARS IS REQUIRED, NO MORE THAN 50 PERCENT OF THE BARS SHALL BE SPLICED AT ONE LOCATION. ALL BAR SPLICE LOCATIONS AND DETAILS ARE SUBJECT TO THE APPROVAL OF THE ENGINEER.
9. UNLESS NOTED OTHERWISE, LAP SPLICES IN CONCRETE BEAMS AND SLABS SHALL BE CLASS "B" TENSION LAP SPLICES PER LATEST EDITION OF ACI 318. STAGGER ALTERNATE SPLICES A MINIMUM OF ONE LAP LENGTH.
10. LAPS IN WELDED WIRE FABRIC SHALL BE MADE SO THAT THE OVERLAP MEASURED BETWEEN OUTERMOST CROSS WIRES OF EACH FABRIC SHEET IS NOT LESS THAN 6 INCHES OR THE SPACING OF CROSS WIRES PLUS 2 INCHES, WHICHEVER IS GREATEST.
11. PROVIDE 48 BAR DIAMETER LAP SPLICES FOR TYPICAL REINFORCEMENT IN MASONRY. PROVIDE 63 BAR DIAMETER LAP SPLICES IF ADJACENT BARS ARE SEPARATED BY 3 INCHES OR LESS (THIS INCLUDES SPLICES FOR 2 BARS PER CELL IN 8 INCH MASONRY).
12. FULL WELDED SPLICES AND OTHER FULL MECHANICAL CONNECTIONS MAY BE USED IN LIEU OF LAP SPLICES AT THE CONTRACTORS OPTION WITH APPROVAL OF ENGINEER. SUCH SPLICES SHALL DEVELOP IN TENSION A MINIMUM OF 125 PERCENT OF THE YIELD STRENGTH OF THE BAR. ALL WELDING SHALL CONFORM TO THE LATEST EDITION OF AWS D1.4 EXCEPT AS PROVIDED IN THE LATEST EDITION OF ACI 318. THE CONTRACTOR SHALL SUBMIT MANUFACTURERS STRENGTH DATA FOR ALL MECHANICAL SPLICES TO THE ENGINEER PRIOR TO CONSTRUCTION.

MASONRY
1. CONCRETE MASONRY UNITS SHALL BE HOLLOW, LOAD-BEARING CONFORMING TO ASTM C90, TYPE 1, GRADE N, WITH A MINIMUM 28-DAY NET COMPRESSIVE STRENGTH OF 1900 PSI. CONTRACTOR SHALL SUBMIT CERTIFICATION THAT UNITS HAVE BEEN SAMPLED AND TESTED IN ACCORDANCE WITH ASTMC140.
2. MASONRY MORTAR SHALL CONFORM ASTM C 270 FOR TYPE S MORTAR WITH A MINIMUM 28-DAY GROSS COMPRESSIVE STRENGTH OF 1800 PSI. THICKNESS OF BED JOINTS SHALL NOT EXCEED 5/8 INCH.
3. MASONRY GROUT SHALL CONFORM TO ASTM C476 COARSE GROUT, WITH A MINIMUM 28-DAY COMPRESSIVE STRENGTH OF 2000 PSI. GROUT TESTING SHALL BE PERFORMED IN ACCORDANCE WITH ASTM C 1019. GROUT TESTING IS REQUIRED PRIOR TO CONSTRUCTION (OR DURING THE FIRST GROUT) AND FOR EVERY 5,000 SQUARE FEET OF WALL AREA DURING CONSTRUCTION.
4. MAXIMUM GROUT LIFT SHALL BE 5'-0".
5. PROVIDE A MINIMUM OF ONE BAR DIAMETER OF GROUT BETWEEN REINFORCING AND MASONRY UNITS.
6. ALL CELLS CONTAINING REINFORCEMENT SHALL BE GROUTED SOLID.
7. SOLID GROUT ALL MASONRY BELOW GRADE.
8. ALL GROUT SHALL BE CONSOLIDATED BY MECHANICAL VIBRATION (STINGER) IMMEDIATELY AFTER PLACEMENT, AND THEN, RECONSOLIDATED APPROXIMATELY 3 TO 5 MINUTES LATER.
9. FOR TYPICAL HORIZONTAL REINFORCEMENT PROVIDE 2- #5 IN 8" MINIMUM DEEP GROUTED CONTINUOUS BOND BEAM AT LEDGER LEVELS AND AT TOP OF WALL. TO MAINTAIN HORIZONTAL BOND BEAM CONTINUITY, PROVIDE BENT BARS AT CORNERS AND WALL INTERSECTIONS TO MATCH THE HORIZONTAL BOND BEAM REINFORCEMENT. PROVIDE 1- #5 MINIMUM IN 8" DEEP GROUTED BOND BEAM ABOVE AND BELOW ALL OPENINGS, EXTENDING 16" MINIMUM PAST EACH JAMB.
10. ALL MASONRY SHALL BE REINFORCED WITH HORIZONTAL JOINT REINFORCEMENT AT 16 IN. O.C. JOINT REINFORCEMENT SHALL BE LADDER TYPE AND CONSIST OF AT LEAST TWO LONGITUDINAL 9 GAGE DEFORMED RODS AND SHALL BE LAPPED A MINIMUM OF SIX INCHES AT SPLICES.
11. FOR TYPICAL VERTICAL REINFORCEMENT PROVIDE 1- #5 VERTICAL FOR 8" CMU AND 1- #6 VERTICAL FOR 12" CMU FULL HEIGHT OF WALL AT 32" O.C. AND AT ALL JAMBS, OPENINGS, WALL CORNERS, INTERSECTIONS, ENDS, BEAM BEARINGS AND EACH SIDE OF CONTROL JOINTS UNLESS NOTED OTHERWISE ON PLANS. SEE FOUNDATION PLANS FOR SPECIFIED REINFORCEMENT.
12. PROVIDE 48 BAR DIAMETER LAP SPLICES FOR TYPICAL REINFORCEMENT. PROVIDE 63 BAR DIAMETER LAP SPLICES IF ADJACENT BARS ARE SEPARATED BY 3 INCHES OR LESS (THIS INCLUDES SPLICES FOR 2 BARS PER CELL IN 8 INCH MASONRY).
13. CONTROL JOINTS IN MASONRY SHALL BE SPACED AT 24 FEET MAXIMUM OR AS NOTED. DO NOT LOCATE CONTROL JOINTS WITHIN 2 FEET OF ANY OPENING OR BEARING POINT OF ANY FRAMING MEMBER ON THE WALL.
14. UNLESS NOTED OTHERWISE, MASONRY ANCHOR PLATES SHALL BE 3/8" THICK AND ANCHOR BOLT OR STUD SIZE SHALL BE 3/4" DIAMETER.

STRUCTURAL STEEL
1. ALL STRUCTURAL STEEL SHALL CONFORM TO THE LATEST AISC SPECIFICATION FOR STRUCTURAL STEEL BUILDINGS.
2. ALL STRUCTURAL SHAPES AND PLATES SHALL CONFORM TO ASTM A36 (FY = 36000 PSI), UNLESS NOTED OTHERWISE. ALL STRUCTURAL W-SHAPES SHALL CONFORM TO ASTM A992 (FY=50000 PSI). ALL STRUCTURAL SQUARE OR RECTANGULAR TUBE SHAPES SHALL CONFORM TO ASTM A500, GRADE B (FY = 46000 PSI). ALL PIPE STEEL SHALL CONFORM TO ASTM A53, TYPE E OR S, GRADE B (FY = 35000 PSI). ALL ROUND HOLLOW STRUCTURAL STEEL (HSS) SHALL CONFORM TO ASTM A500, GRADE B (FY = 42000 PSI).
3. ALL UNFINISHED BOLTS (MACHINE BOLTS) AND NUTS SHALL CONFORM TO ASTM A307, GRADE A, SIZES AS SHOWN ON DRAWINGS. ALL HIGH STRENGTH BOLTS SHALL CONFORM TO ASTM A325-N.
4. ANCHOR BOLTS AND PLAIN OR THREADED BARS AND ANCHORS SHALL CONFORM TO ASTM F1554, GRADE 36.
5. ALL HEADED STUDS SHALL CONFORM TO ASTM A108.
6. ALL WELDING SHALL BE DONE IN CONFORMANCE WITH AWS (AMERICAN WELDING SOCIETY) STRUCTURAL WELDING CODE.
7. ALL WELDING ELECTRODES SHALL CONFORM TO ASTM A233 AND AWS A5.1, GRADE E-70XX.
8. CONNECTIONS WITH FULL (COMPLETE) PENETRATION WELDS SHALL BE TESTED BY NON-DESTRUCTIVE METHOD IN ACCORDANCE WITH AWS.
9. THE STEEL FABRICATOR SHALL FURNISH ERECTION BOLTS, CLIP ANGLES, AND TEMPORARY FASTENINGS REQUIRED FOR ERECTION.
10. COLUMN BASES AND SPLICED ENDS SHALL BE MILLED OR SAW CUT TO PROVIDE FULL BEARING.
11. MINIMUM BOLTED CONNECTION SHALL BE 2 BOLTS, UNLESS SHOWN OR NOTED OTHERWISE.
12. BOLT HOLES SHALL BE 1/16 INCH LARGER IN DIAMETER THAN THE BOLT, UNLESS NOTED OTHERWISE.
13. PRIMARY FIELD CONNECTIONS SHALL BE BOLTED, USING 3/4" DIAMETER HEAVY HEXAGON STRUCTURAL A325 BOLTS, FRICTION TYPE, WITH ONE HARDENED WASHER, UNLESS NOTED. BOLTED CONNECTIONS SHALL BE ASSEMBLED IN ACCORDANCE WITH "SPECIFICATIONS FOR STRUCTURAL JOINTS USING ASTM A325 BOLTS", LATEST REVISION. WELDED EQUIVALENT MAY BE SUBSTITUTED IF SHOWN ON THE DRAWINGS OR APPROVED BY THE ENGINEER.
14. SECONDARY FIELD CONNECTIONS (STAIRS, LADDERS, ETC.) MAY BE BOLTED USING 3/4" DIAMETER STANDARD MACHINE BOLTS (A307) UNLESS NOTED.
15. UNLESS NOTED OTHERWISE, BEAM CONNECTIONS SHALL BE FURNISHED IN ACCORDANCE WITH TABLE II AND TABLE IV, FRAMED BEAM CONNECTIONS IN THE AISC MANUAL OF STEEL CONSTRUCTION, LATEST EDITION. ALL MATERIAL IN THE CONNECTION SHALL BE SIZED TO ACCOMMODATE THE SHEAR VALUES SHOWN FOR ASTM A325 BOLTS, USING VALUES FOR FRICTION TYPE CONNECTIONS OR BEARING TYPE WITH THREADS IN SHEAR PLANE.
16. THE CONTRACTOR SHALL PROVIDE 4 INCHES MINIMUM CONCRETE COVER OVER ALL STEEL MEMBERS OR COMPONENTS (WF, TS, PLATES, BOLTS, ETC.) ADJACENT (EXPOSED) TO SOIL.
17. THE CONTRACTOR SHALL SUBMIT SHOP DRAWINGS AND ERECTION DRAWINGS FOR ALL STRUCTURAL STEEL PRIOR TO FABRICATION.

OPEN-WEB STEEL JOISTS & JOIST GIRDERS
1. ALL JOISTS AND BRIDGING SHALL BE DESIGNED AND MANUFACTURED BY A MEMBER OF THE STEEL JOIST INSTITUTE AND IN ACCORDANCE WITH THE LATEST S.J.I. AND AISC SPECIFICATIONS FOR THE LOADS AND SPANS SHOWN ON THE DRAWINGS. DESIGN OF THE JOISTS AND THE BRIDGING SYSTEM IS THE SOLE RESPONSIBILITY OF THE MANUFACTURER.
2. JOIST MANUFACTURER SHALL DESIGN JOISTS FOR ALL SPECIFIED LOADS. JOIST DESIGNATIONS ON THE DRAWINGS ARE IN THE FORM "JOIST DEPTH (IN), JOIST SERIES, TOTAL LOAD (PLF)/LIVE LOAD (PLF)". ADDITIONAL AXIAL LOADS AT THE TOP CHORD, IF SHOWN IN THE DRAWINGS, SHALL BE INCLUDED IN THE DESIGN. IN ADDITION TO LOADS SHOWN ON JOIST DESIGNATIONS, PROVIDE CAPACITY FOR ALL MECHANICAL UNITS OR OTHER CONCENTRATED LOADS GREATER THAN 200 POUNDS. CONTRACTOR SHALL VERIFY THAT JOIST MANUFACTURER HAS ACCOUNTED FOR ALL MECHANICAL, ELECTRICAL AND PLUMBING LOADS PRIOR TO FABRICATION OF JOISTS. FOR JOIST HAVING CONCENTRATED LOADS, UNBRACED COMPRESSION CHORDS, AND/OR OTHER UNUSUAL CONDITIONS MANUFACTURER SHALL ADD ADDITIONAL WEB MEMBERS AS REQUIRED AND ADJUST CHORD AND WEB SIZES ACCORDINGLY, BUT SHALL NOT ALTER DEPTH OF JOISTS.
3. ALL JOISTS SHALL BE DESIGNED FOR A 15 PSF MINIMUM NET WIND UPLIFT UNLESS NOTED OTHERWISE.
4. ALL JOISTS BEARING ON MASONRY (AND CONNECTION TO BRG PLATE) SHALL BE DESIGNED FOR 4.0 KIP AXIAL LOAD (TENSION OR COMPRESSION) DUE TO WALL ANCHORAGE FORCE.
5. ALL JOISTS SHALL BE CAMBERED FOR DESIGN DEAD LOAD. TOTAL LOAD DEFLECTIONS SHALL BE LIMITED TO SPAN/ 240 AND LIVE LOAD DEFLECTIONS SHALL BE LIMITED TO SPAN/360.
6. JOIST ERECTION SHALL BE PER THE SJI SPECIFICATION AND THE "RECOMMENDED CODE OF STANDARD PRACTICE FOR STEEL JOISTS". BRIDGING SHALL BE PER SJI SPECIFICATIONS. THE CONTRACTOR SHALL COORDINATE THE LOCATION OF ALL NECESSARY ANCHORS, BRACING AND BRIDGING WITH THE JOIST MANUFACTURER.
7. JOIST MANUFACTURER SHALL SUBMIT SHOP DRAWINGS, ERECTION DRAWINGS, AND DESIGN CALCULATIONS SEALED BY A STRUCTURAL ENGINEER REGISTERED IN THE STATE OF ARIZONA FOR ALL JOISTS AND BRIDGING.

STEEL DECKING
1. ALL STEEL DECK AND ACCESSORIES SHALL BE ASTM A653, SS, GRADE 33, ZINC COATED (GALVANIZED) PER ASTM A653, G60. THE DECKING SHALL HAVE MINIMUM YIELD STRENGTH OF 38,000 PSI.
2. ALL WELDING SHALL BE PERFORMED IN ACCORDANCE WITH AWS D1.3 "SPECIFICATION FOR WELDING SHEET METAL IN STRUCTURES" BY WELDERS EXPERIENCED IN LIGHT GAGE STEEL DECK WORK. ALL WELDING ELECTRODES SHALL BE E60XX.
3. THE FIRST SHEET OF STEEL DECK ADJACENT AND PARALLEL TO WALLS, PERIMETER MEMBERS OR MEMBERS IDENTIFIED AS CHORD, COLLECTOR, OR DRAG MEMBERS (ON ONE OR BOTH SIDES AS APPLICABLE) SHALL BE FULL PANEL WIDTH SHEETS.
4. MINIMUM BEARING OF DECKING ON SUPPORTS SHALL BE 2 INCHES.
5. DECKING UNITS SHALL BE CONTINUOUS OVER THREE OR MORE SPANS, EXCEPT WHERE FRAMING DOES NOT PERMIT. FOR COMPOSITE DECK, SHORING MAY BE REQUIRED AT NON-CONTINUOUS SPANS. PRIOR TO PLACEMENT OF CONCRETE FILL, CONTRACTOR SHALL PROVIDE SHORING FOR DECK AT MIDSPAN WHERE I.C.B.O. RESEARCH REPORT FOR THE FLOOR DECK REQUIRES SHORING BASED ON THE SPAN LENGTH AND SPAN CONTINUITY. SHORING SHALL REMAIN IN PLACE UNTIL THE CONCRETE REACHES 75% OF THE DESIGN COMPRESSIVE STRENGTH. THE CONTRACTOR, AT HIS OPTION, MAY PROVIDE A HEAVIER GAGE METAL DECK ADEQUATE FOR UNSHORED CONSTRUCTION.
6. DECK AT ROOF SHALL BE 1 1/2" DEEP, 36" WIDE, 20 GAGE, GALVANIZED STEEL B TYPE DECK (VULCRAFT 1.5B20 OR EQUAL WITH A MINIMUM POSITIVE S=.235 (IN3), NEGATIVE S=.248 (IN3), AND I=.216 (IN4) PER FOOT OF WIDTH). DECK SHALL BE ERECTED IN ACCORDANCE WITH MANUFACTURER'S RECOMMENDATIONS. DECK SHALL BE THREE SPAN CONTINUOUS MINIMUM AND SHALL BE ATTACHED FOR A MINIMUM DIAPHRAGM SHEAR CAPACITY OF 549 PLF USING THE FOLLOWING MINIMUM ATTACHMENTS:

   WELD DECK TO SUPPORTING MEMBERS WITH 7- 5/8" DIAMETER PUDDLE WELDS PER SHEET AT ENDS, END LAPS, AND AT INTERMEDIATE SUPPORTS, AND AT 12" O.C. AT PERIMETER SUPPORTS AND OPENING EDGES RUNNING PARALLEL TO THE DECK. SIDE SEAM ATTACHMENTS SHALL BE #10 TEK SCREWS AT 12" O.C.
7. DECK AT ROOF OF PREPARATION AREA SHALL BE 3" DEEP, 36" WIDE, 20 GAGE GALVANIZED STEEL N TYPE DECK (VULCRAFT 3N20 OR EQUAL WITH A MINIMUM POSITIVE S=.501 (IN3), NEGATIVE S=.552 (IN3), AND I=0.964 (IN4) PER FOOT OF WIDTH). DECK SHALL BE ERECTED IN ACCORDANCE WITH MANUFACTURER'S RECOMMENDATIONS. DECK SHALL BE ATTACHED FOR A MINIMUM DIAPHRAGM SHEAR CAPACITY OF 437 PLF USING THE FOLLOWING MINIMUM ATTACHMENTS:

   WELD DECK TO SUPPORTING MEMBERS WITH 8- 5/8" DIAMETER PUDDLE WELDS PER SHEET AT ENDS, END LAPS, AND AT INTERMEDIATE SUPPORTS, AND AT 12" O.C. AT PERIMETER SUPPORTS AND OPENING EDGES RUNNING PARALLEL TO THE DECK. SIDE SEAM ATTACHMENTS SHALL BE WELDED.

STRUCTURAL EPOXY FOR ANCHORS
1. STRUCTURAL EPOXY USED TO SECURE ALL ANCHORS (THREADED RODS, REINFORCING BARS, ETC.) IN CONCRETE OR MASONRY SHALL BE SIMPSON "SET" HIGH STRENGTH EPOXY AS INDICATED IN ICBO ER 5279, OR APPROVED ALTERNATE WITH CURRENT ICBO REPORT. ALTERNATE EPOXY SHALL HAVE ALLOWABLE LOADS MEETING OR EXCEEDING SPECIFIED EPOXY FOR TEMPERATURES UP TO 111 DEGREES FAHRENHEIT. ALTERNATE EPOXY SHALL HAVE NO MORE THAN A 6 PERCENT REDUCTION IN ALLOWABLE LOADS FOR TEMPERATURES UP TO 128 DEGREES FAHRENHEIT.
2. STRUCTURAL EPOXY AND ANCHORS SHALL BE INSTALLED IN CONFORMANCE WITH MANUFACTURER'S RECOMMENDATIONS AND ICBO EVALUATION REPORT.
3. PRIOR TO DRILLING HOLES IN CONCRETE OR MASONRY, THE CONTRACTOR SHALL LOCATE REINFORCEMENT BY NON-DESTRUCTIVE MEANS. NO REINFORCEMENT SHALL BE DAMAGED BY DRILLING OPERATIONS.
4. HOLES SHALL BE CLEANED WITH OIL-FREE COMPRESSED AIR AND A NYLON BRUSH. AS A MINIMUM, THE HOLE SHALL BE BLOWN OUT, BRUSHED, AND THEN BLOWN OUT AGAIN.
5. AFTER EPOXY IS INSTALLED, NO WELDING OR ANY OTHER MEANS OF HEATING THE EPOXY, THE ANCHOR, OR ANY CONNECTED OR ADJACENT MEMBERS SHALL BE ALLOWED.

EXPANSION ANCHORS
1. EXPANSION STUD ANCHORS, FOR USE IN CONCRETE OR MASONRY, SHALL BE SIMPSON "WEDGE-ALL" WEDGE ANCHOR AS INDICATED IN ICC-ES AC193, OR APPROVED ALTERNATE WITH CURRENT ICC-ES REPORT. ALTERNATE ANCHOR SHALL HAVE ALLOWABLE LOADS MEETING OR EXCEEDING SPECIFIED ANCHOR.
2. INTERNALLY THREADED EXPANSION SHELL ANCHORS, FOR USE IN CONCRETE OR MASONRY, SHALL BE SIMPSON "DROP-IN" INTERNALLY THREADED EXPANSION SHELL ANCHOR AS INDICATED IN ICBO ER 3631, OR APPROVED ALTERNATE WITH CURRENT ICBO REPORT. ALTERNATE ANCHOR SHALL HAVE ALLOWABLE LOADS MEETING OR EXCEEDING SPECIFIED ANCHOR.
3. EXPANSION ANCHORS SHALL BE INSTALLED IN CONFORMANCE WITH MANUFACTURER'S RECOMMENDATIONS AND ICBO EVALUATION REPORT.
4. PRIOR TO DRILLING HOLES IN CONCRETE OR MASONRY, THE CONTRACTOR SHALL LOCATE REINFORCEMENT BY NON-DESTRUCTIVE MEANS. NO REINFORCEMENT SHALL BE DAMAGED BY DRILLING OPERATIONS.
5. CONCRETE OR MASONRY SHALL HAVE ATTAINED FULL DESIGN STRENGTH PRIOR TO INSTALLATION OF EXPANSION ANCHORS.

NONSHRINK GROUT
1. ALL NONSHRINK GROUT SHALL BE CEMENT-BASED, NONMETALLIC, NONSHRINK GROUT WITH A MINIMUM 28-DAY COMPRESSIVE STRENGTH OF 6500 PSI. NONSHRINK GROUT SHALL BE "FIVE STAR HIGH PERFORMANCE PRECISION GROUT" AS MANUFACTURED BY FIVE STAR PRODUCTS, OR APPROVED ALTERNATE MEETING SPECIFIED STRENGTH, AND SHALL CONFORM TO THE REQUIREMENTS OF ASTM C 1107.
2. ALL DRY-PACK GROUT SHALL BE INSTALLED AFTER BEARING OR BASE PLATE IS SET LEVEL (OR COLUMN IS PLUMBED) AND BEFORE THE PRIMARY LOAD IS APPLIED TO THE PLATE.
3. ALL GROUT FOR ANCHORS SET IN CONCRETE, MASONRY, ROCK OR SOIL SHALL BE MIXED TO A FLOWABLE VISCOSITY AND SHALL FILL ALL VOIDS BETWEEN THE ANCHOR AND THE BASE MEDIA.

SHOP DRAWINGS (SUBMITTALS)
1. SUBMITTAL REVIEW IS INTENDED ONLY AS AN AID TO THE CONTRACTOR IN OBTAINING CORRECT SHOP DRAWINGS. RESPONSIBILITY FOR CORRECTNESS SHALL REST WITH THE CONTRACTOR.
2. THE SHOP DRAWINGS DO NOT REPLACE THE CONTRACT DOCUMENTS. ITEMS OMITTED OR SHOWN INCORRECTLY SHALL NOT BE CONSIDERED AS CHANGES TO THE CONTRACT DOCUMENTS. IT IS THE CONTRACTOR'S RESPONSIBILITY TO ENSURE ITEMS ARE CONSTRUCTED IN CONFORMANCE TO THE CONTRACT DOCUMENTS.
3. THE CONTRACTOR SHALL REVIEW AND STAMP ALL SHOP DRAWINGS AS REVIEWED PRIOR TO SUBMITTAL. SHOP DRAWINGS SUBMITTED WITHOUT STAMP INDICATING REVIEW BY CONTRACTOR SHALL BE RETURNED UNREVIEWED.
4. ALL SUBMITTALS SHALL STATE SPECIFICALLY THAT THEY HAVE BEEN PREPARED BASED ON THESE DRAWINGS (IDENTIFIED BY PROJECT NAME, SHEET NUMBER AND DATE.) SUBMITTALS WITHOUT THIS STATED VERIFICATION SHALL BE RETURNED UNREVIEWED.
5. REPRODUCTION OF ANY PORTION OF THE STRUCTURAL CONTRACT DOCUMENTS FOR RESUBMITTAL AS A SHOP DRAWING IS PROHIBITED. SHOP DRAWINGS PRODUCED IN THIS MANNER WILL BE REJECTED.
6. THE CONTRACTOR / MANUFACTURER / FABRICATOR SHALL FLAG (CLOUD) ALL ITEMS NOT IN CONFORMANCE WITH CONTRACT DOCUMENTS. ANY CHANGES TO CONTRACT DOCUMENTS NOT FLAGGED OR CLOUDED BY SUBMITTING PARTIES SHALL NOT BE CONSIDERED APPROVED AFTER ENGINEER'S REVIEW, UNLESS NOTED OTHERWISE.
7. THE ADEQUACY OF ENGINEERING DESIGN AND LAYOUT PERFORMED BY OTHERS RESTS WITH THE SUBMITTING PARTY.
8. THE ENGINEER HAS THE RIGHT TO APPROVE OR REJECT ANY CHANGES TO CONTRACT DOCUMENTS AT ANY TIME INCLUDING AFTER SHOP DRAWING REVIEW.
9. VERIFY ALL DIMENSIONS WITH ARCHITECT.

DEFERRED SUBMITTALS
SHOP DRAWING SUBMITTALS WHICH REQUIRE DESIGN CALCULATIONS OR DRAWINGS SEALED BY A REGISTERED ENGINEER OTHER THAN THE ENGINEER OF RECORD, AND THAT ARE NOT SUBMITTED AT THE TIME OF BUILDING PERMIT APPLICATION, SHALL BE CONSIDERED AS DEFERRED SUBMITTALS IN ACCORDANCE WITH THE IBC SECTION 106.3.4.2. DEFERRED SUBMITTALS SHALL BE REVIEWED BY THE ENGINEER OF RECORD FOR GENERAL COMPLIANCE WITH THE CONTRACT DOCUMENTS AND THEN SUBMITTED TO THE BUILDING OFFICIAL FOR APPROVAL. THE DEFERRED SUBMITTAL ITEMS SHALL NOT BE INSTALLED UNTIL THEIR DESIGN AND SUBMITTAL DOCUMENTS HAVE BEEN APPROVED BY THE BUILDING OFFICIAL.

THE FOLLOWING SUBMITTALS SHALL BE CONSIDERED AS DEFERRED SUBMITTALS:

1. STEEL JOISTS

STATEMENT OF SPECIAL INSPECTION
THIS SPECIAL INSPECTION PROGRAM IS PROVIDED IN CONFORMANCE WITH IBC SECTION 1704 SPECIAL INSPECTION IS TO BE PROVIDED IN ADDITION TO THE INSPECTIONS CONDUCTED BY THE DEPARTMENT OF BUILDING SAFETY AND SHALL NOT BE CONSTRUED TO RELIEVE THE OWNER OR CONTRACTOR FROM REQUESTING THE INSPECTIONS REQUIRED BY IBC SECTION 109. THE SPECIAL INSPECTOR SHALL BE EMPLOYED BY THE OWNER, THE ENGINEER OR ARCHITECT OF RECORD, OR AN AGENT OF THE OWNER, BUT NOT THE CONTRACTOR OR ANY OTHER PERSON RESPONSIBLE FOR THE WORK.

1. SPECIAL INSPECTION SHALL BE PROVIDED FOR THE FOLLOWING WORK:
   A. STEEL CONSTRUCTION
   B. CONCRETE
      (SPECIAL INSPECTIONS OF CONCRETE SLABS SHALL SPECIFICALLY NOT ADDRESS VAPOR BARRIER CONSIDERATIONS.)
   C. MASONRY
   D. EARTHWORK
   E. POST-INSTALLED ANCHORS
2. NAME OF SPECIAL INSPECTOR: FOR STRUCTURAL ITEMS ABOVE, THE SPECIAL INSPECTOR SHALL BE, OR WORK UNDER THE DIRECT SUPERVISION OF, THE STRUCTURAL ENGINEER OF RECORD - STRUCTURAL CONCEPTS INC., PHONE NO. (520) 721-2324. FOR GEOTECHNICAL ITEMS ABOVE, THE SPECIAL INSPECTOR SHALL BE, OR WORK UNDER THE DIRECT SUPERVISION OF, THE GEOTECHNICAL ENGINEER OF RECORD. SEE GEOTECHNICAL REPORT FOR CONTACT INFORMATION. THE OWNER, AT HIS OPTION, MAY DESIGNATE AN ALTERNATE SPECIAL INSPECTOR, OBTAIN THE REQUIRED CERTIFICATE(S), AND MAKE THE NECESSARY NOTIFICATIONS TO ALL PARTIES INVOLVED. ALTERNATE SPECIAL INSPECTOR SHALL BE A LICENSED STRUCTURAL ENGINEER (OR GEOTECHNICAL ENGINEER FOR GEOTECHNICAL ITEMS ONLY) OR ICBO CERTIFIED SPECIAL INSPECTOR.
3. DUTIES OF SPECIAL INSPECTOR: OBSERVE FIELD CONDITIONS FOR CONFORMANCE WITH CONSTRUCTION DOCUMENTS. ALL DISCREPANCIES SHALL BE BROUGHT TO THE IMMEDIATE ATTENTION OF THE CONTRACTOR FOR CORRECTION, AND IF UNCORRECTED, BROUGHT TO THE ATTENTION OF THE ENGINEER OF RECORD AND THE BUILDING OFFICIAL. PREPARE FIELD REPORTS DAILY. FIELD REPORTS SHALL INDICATE, AS A MINIMUM, THE DATE, THE PORTION OF THE WORK THAT WAS INSPECTED, AND ANY UNCORRECTED DISCREPANCIES. UPON COMPLETION OF THE WORK, THE SPECIAL INSPECTION CERTIFICATE SHALL BE COMPLETED AND SEALED BY THE SUPERVISING ENGINEER AND SUBMITTED TO THE BUILDING OFFICIAL ALONG WITH COPIES OF THE FIELD REPORTS.
4. THE CONTRACTOR SHALL BE RESPONSIBLE FOR CONTACTING THE SPECIAL INSPECTOR AT LEAST ONE WORKING DAY IN ADVANCE TO SCHEDULE ANY SPECIAL INSPECTION.

ABBREVIATIONS

A.B.	ANCHOR BOLT	K	KIP (1000 POUNDS)
A.B.C.	AGGREGATE BASE COURSE	KO	KNOCKOUT (PANEL)
A.F.F.	ABOVE FINISH FLOOR	KSF	KIPS PER SQUARE FOOT
ALT	ALTERNATE	KSI	KIPS PER SQUARE INCH
ALUM	ALUMINUM	L	LENGTH (DIMENSION)
APPROX	APPROXIMATE	LBS OR #	POUNDS
ARCH	ARCHITECTURAL	L.F.	LINEAR FOOT
@	AT (MEASUREMENT)	L.L.	LIVE LOAD
B.C.	BOTTOM CHORD	LLH	LONG LEG HORIZONTAL
B.F.F.	BELOW FINISH FLOOR	LLV	LONG LEG VERTICAL
BIT	BITUMINOUS	LONG	LONGITUDINAL
BL OR B.L.	BUILDING LINE	MAT'L	MATERIAL
BLDG	BUILDING	MAX	MAXIMUM
BLKG	BLOCKING	M.B.	MACHINE BOLT
BM	BEAM	M.C.J.	MASONRY CONTROL JOINT
B.O.	BOTTOM OF	MECH	MECHANICAL
B.O.B.	BOTTOM OF BEAM	MFR('S)	MANUFACTURER('S)
B.O.D.	BOTTOM OF DECK	MIN	MINIMUM
B.O.F.	BOTTOM OF FOOTING	MIR	MIRROR
BOTT	BOTTOM	MTL	METAL
BRG	BEARING	N/A	NOT APPLICABLE
BTWN	BETWEEN	N.I.C.	NOT IN CONTRACT
CF	CUBIC FOOT	N.T.S.	NOT TO SCALE
C.I.P.	CAST-IN-PLACE	(N)	NEW
C.J.	CONSTRUCTION (OR CONTROL) JOINT	OA	OVERALL
℄	CENTERLINE	O.C.	ON CENTER
CLR	CLEAR	O.D.	OUTSIDE DIAMETER
COL	COLUMN	O.F.	OUTSIDE FACE
C.M.P.	CORRUGATED METAL PIPE	OPNG	OPENING
C.M.U.	CONCRETE MASONRY UNIT	OPP	OPPOSITE
CONC	CONCRETE	OWSJ	OPEN WEB STEEL JOIST
CONN	CONNECTION	P.C.	PRECAST CONCRETE
CONT	CONTINUOUS	PL	PLATE
COORD	COORDINATE	PLF	POUNDS PER LINEAR FOOT
CT.J.	CONTROL JOINT	PLWD	PLYWOOD
CTR	CENTER	PREFAB	PREFABRICATED
CY	CUBIC YARD	PSF	POUNDS PER SQUARE FOOT
D	DEPTH (DIMENSION)	PSI	POUNDS PER SQUARE INCH
DBL	DOUBLE	P.V.C.	POLYVINYL CHLORIDE (PIPE)
DIA OR Ø	DIAMETER	R	RADIUS
DIAPH	DIAPHRAGM	RCP	REINFORCED CONCRETE PIPE
D.L.	DEAD LOAD	REBAR	REINFORCING BAR
△	DEFLECTION	REF	REFERENCE
DN	DOWN	REINF	REINFORCING STEEL
DO	DITTO	REQD	REQUIRED
DTL	DETAIL	REV	REVISION
DWG(S)	DRAWING(S)	R.S.	ROUGH SAWN
E.F.	EACH FACE	$	STEP IN FOOTING
E.J.	EXPANSION JOINT	SIM	SIMILAR
EL	ELEVATION	SPEC	SPECIFICATION
E.O.S.	EDGE OF SLAB	S.S.	STAINLESS STEEL
EQ	EQUAL	STA	STATION
EQUIP	EQUIPMENT	STD	STANDARD
E.W.	EACH WAY	STIFF	STIFFENER
EXCAV	EXCAVATE / EXCAVATION	STL	STEEL
EXP	EXPANSION	SQ	SQUARE
EXST	EXISTING	SYM	SYMMETRICAL
EXT	EXTERIOR	T&B	TOP & BOTTOM
(E)	EXISTING	T&G	TONGUE & GROOVE
F.F.E.	FINISH FLOOR ELEVATION	T.C.	TOP CHORD
F.G.	FINISH GRADE	T.L.	TOTAL LOAD
FLR	FLOOR	THK	THICK(NESS)
FND	FOUNDATION	T.O.	TOP OF
F.O.	FACE OF	T.O.B.	TOP OF BEAM
F.O.W.	FACE OF WALL	T.O.D.	TOP OF DECK
F.P.	FULL PENETRATION (WELD)	T.O.F.	TOP OF FOOTING
FRMG	FRAMING	T.O.L.	TOP OF LEDGER
FT	FOOT / FEET	T.O.M.	TOP OF MASONRY
FTG	FOOTING	T.O.P.	TOP OF PLATE
F.V.	FIELD VERIFY	T.O.S.	TOP OF STEEL
GA	GAGE	T.O.W.	TOP OF WALL
GALV	GALVANIZED	TRANS	TRANSVERSE
GLB	GLUED-LAMINATED BEAM	TYP	TYPICAL
G.S.N.	GENERAL STRUCTURAL NOTES	U.N.O.	UNLESS NOTED OTHERWISE
H	HEIGHT (DIMENSION)	VERT	VERTICAL
HGT	HEIGHT (DIMENSION)	W	WIDTH (DIMENSION)
HK	HOOK	W/	WITH
HOR	HORIZONTAL	W/O	WITHOUT
H.S.A.	HEADED STUD ANCHOR	WD	WOOD
I.D.	INSIDE DIAMETER	W.P.	WORK POINT
I.F.	INSIDE FACE	W.W.F.	WELDED WIRE FABRIC
INT	INTERIOR	WSCT	WAINSCOT
JT	JOINT	W.S.EL	WATER SURFACE ELEVATION

GRESHAM & BEACH
ARCHITECTS INC.
177 NORTH CHURCH AVENUE
SUITE 755
TUCSON . ARIZONA . 85701
TEL.520.882.0698
FAX.520.882.0989

PRELIMINARY
EXPIRES 6/30/2010

STRUCTURAL CONCEPTS INC.
CONSULTING ENGINEERS
(520) 721-2324
(520) 885-3507 FAX
8230 E. BROADWAY SUITE W-7
TUCSON, ARIZONA 85710

CITY OF TUCSON
FACILITIES DESIGN & MANAGEMENT DIVISION
EL PUEBLO ACTIVITY CENTER
5100 S. MISSIONDALE RD.
TUCSON, AZ

REVISIONS Number	Date	By

Designed	GRS
Drawn	JCR
Checked	GRS
Date	10/29/08
Job Number	27010.00

S2

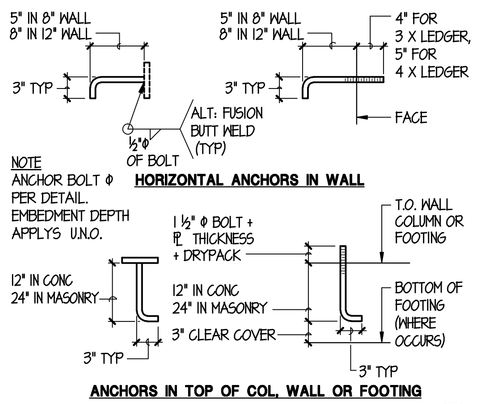

TYPICAL ANCHOR BOLTS
NO SCALE — F1020 — 1

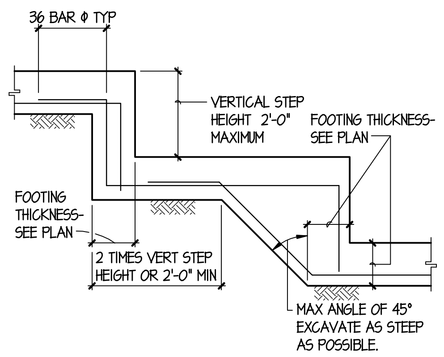

TYP STEPPED FOOTING
SCALE ½" = 1'-0" — F1030 — 2

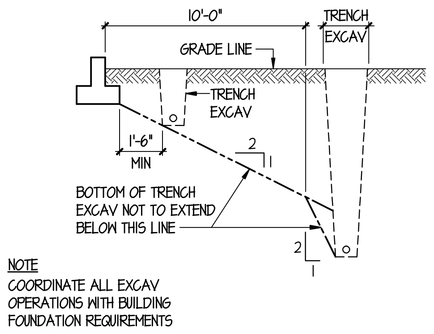

TYP EXCAVATIONS NEAR FOOTING
NO SCALE — F1040 — 3

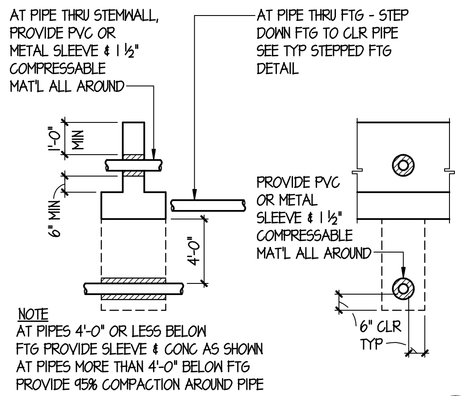

TYP UTILITY PIPE AT FOOTING
NO SCALE — F1050 — 4

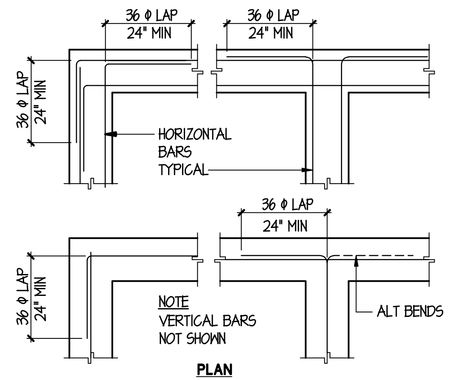

TYP REINF @ CONCRETE JUNCTION
SCALE ½" = 1'-0" — F1100 — 5

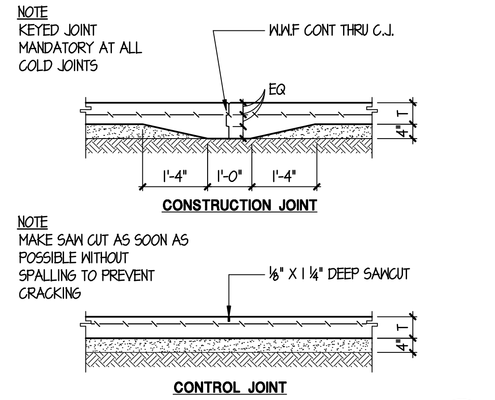

TYPICAL C.J.
NO SCALE — D16203 — 6

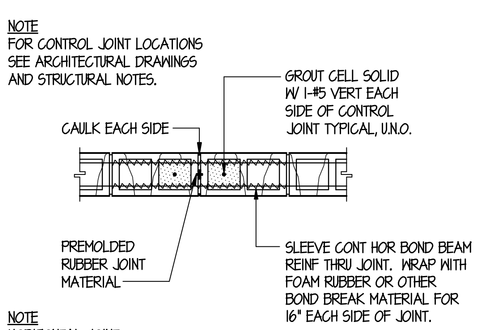

TYP MASONRY CONTROL JOINT (M.C.J.)
NO SCALE — M1100 — 7

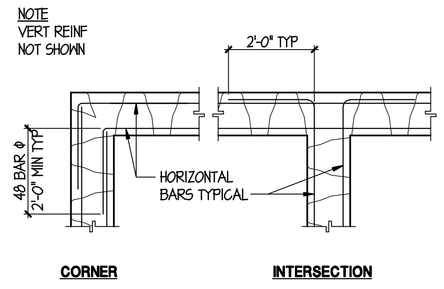

TYP REINF @ MASONRY JUNCTION
SCALE ½" = 1'-0" — M1001 — 8

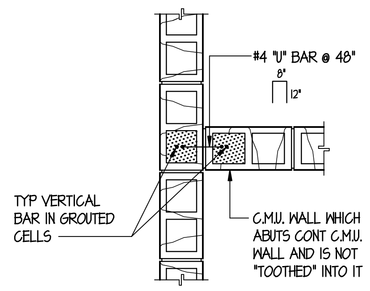

TYP C.M.U. INTERSECTION
NO SCALE — M1001 — 9

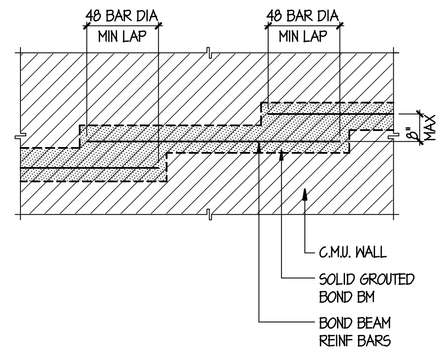

TYPICAL STEPPED C.M.U. BOND BM
NO SCALE — M1200 — 10

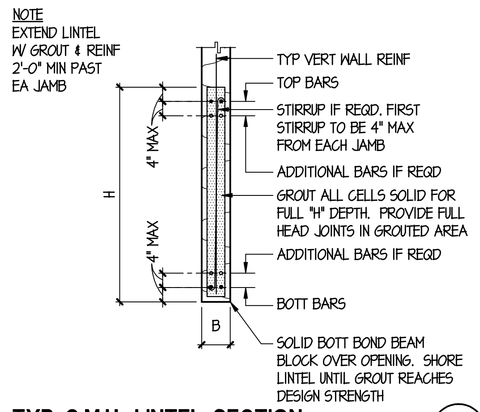

TYP C.M.U. LINTEL SECTION
SCALE ½" = 1'-0" — M2100 — 11

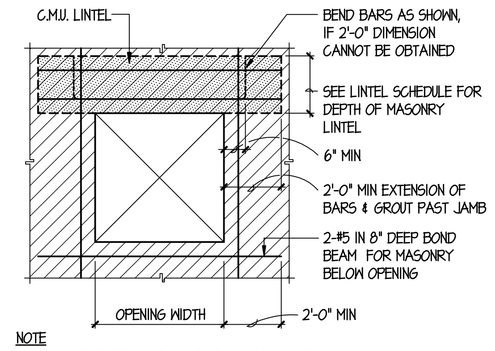

TYP C.M.U. OPENING ELEVATION
NO SCALE — M2110 — 12

TYP C.M.U. DOOR OPENING ELEVATION
NO SCALE — M2110A — 13

TYP INTERIOR WALL FOUNDATION
SCALE ½" = 1'-0" — F2550 — 14

TYP EXTERIOR WALL FOUNDATION
SCALE ½" = 1'-0" — F2500 — 15

TYP DROPPED STEM @ EXT OPENING
SCALE ½" = 1'-0" — F2510 — 16

TYPICAL DEPRESSED SLAB
SCALE ½" = 1'-0" — F5002 — 17

NEW C.M.U. WALL TO EXST C.M.U.
NO SCALE — M1002 — 18

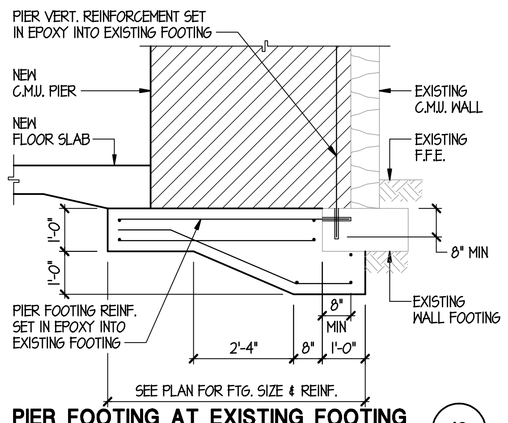

PIER FOOTING AT EXISTING FOOTING
SCALE ½" = 1'-0" — 08182S3 — 19

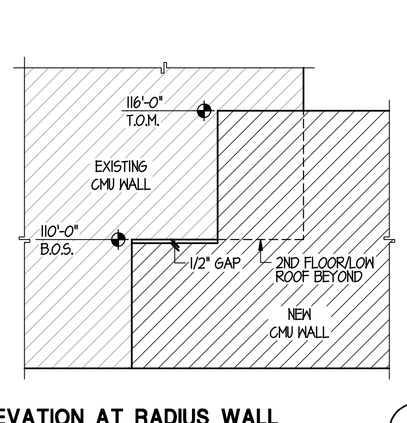

ELEVATION AT RADIUS WALL
SCALE ½" = 1'-0" — 08182S3 — 20

GRESHAM BEACH ARCHITECTS INC.
177 NORTH CHURCH AVENUE
SUITE 755
TUCSON . ARIZONA . 85701
TEL.520.882.0698
FAX.520.882.0989

PROFESSIONAL ENGINEER — ARIZONA — JAMES C. RAY — 21 — STRUCTURAL — REGISTERED
EXPIRES 6/30/2010

STRUCTURAL CONCEPTS INC.
CONSULTING ENGINEERS
(520) 721-2324
(520) 885-3507 FAX
8230 E. BROADWAY SUITE W-7
TUCSON, ARIZONA 85710

CITY OF TUCSON
FACILITIES DESIGN & MANAGEMENT DIVISION

EL PUEBLO ACTIVITY CENTER

5100 S. MISSIONDALE RD.
TUCSON, AZ

REVISIONS

Number	Date	By

Designed	GRS
Drawn	JCR
Checked	GRS
Date	10/29/08
Job Number	27010.00

S3

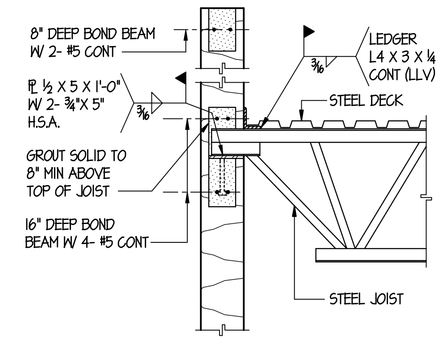

STEEL JOIST BEARING @ EXT WALL

SCALE ¾" = 1'-0" 0515093 (1)

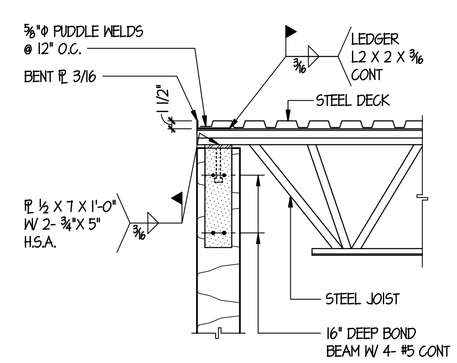

STEEL JOIST BEARING @ EXT WALL

SCALE ¾" = 1'-0" 53121A (2)

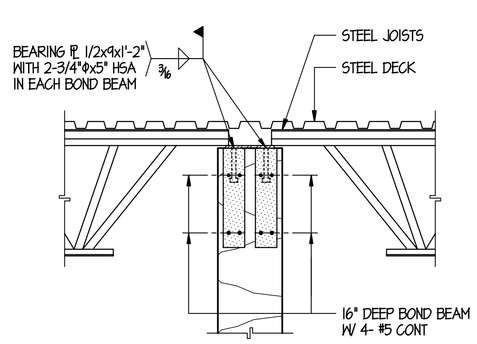

JOIST BEARING AT PIER

SCALE ¾" = 1'-0" 0818254 (3)

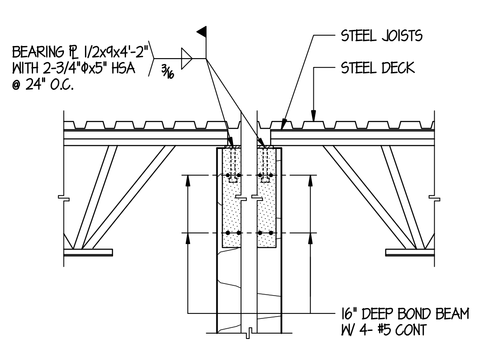

JOIST BEARING AT PIER

SCALE ¾" = 1'-0" 0818254 (4)

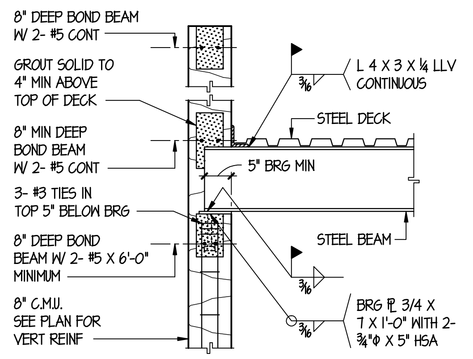

STEEL BEAM @ C.M.U. WALL

SCALE ¾" = 1'-0" S2010 (5)

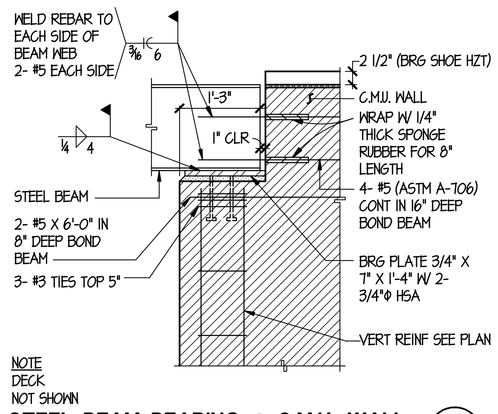

STEEL BEAM BEARING @ C.M.U. WALL

SCALE ¾" = 1'-0" M2702 (6)

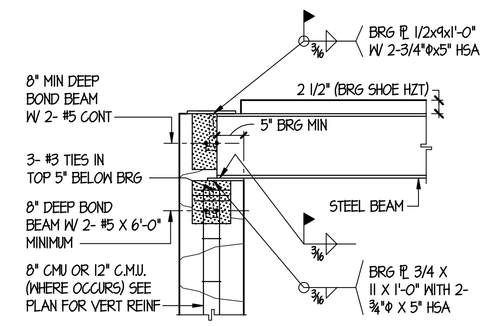

NOTE:
DECK NOT SHOWN

STEEL BEAM BEARING @ C.M.U. PIER

SCALE ¾" = 1'-0" 0818254 (7)

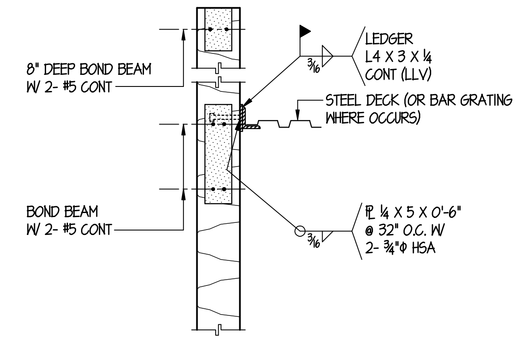

TYP LEDGER ANGLE - NON-BEARING

SCALE ¾" = 1'-0" 0515093 (8)

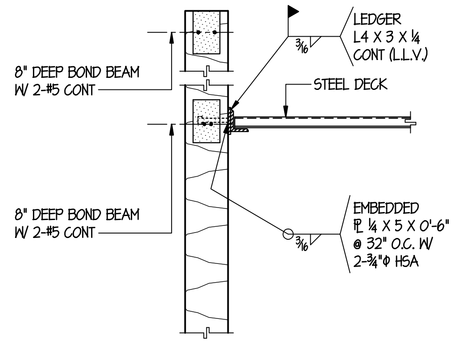

TYP LEDGER ANGLE - BEARING

SCALE ¾" = 1'-0" 5511I (9)

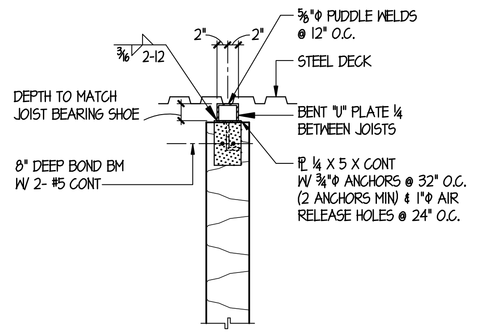

STEEL DECK CONN @ C.M.U. WALL

SCALE ¾" = 1'-0" S2422 (10)

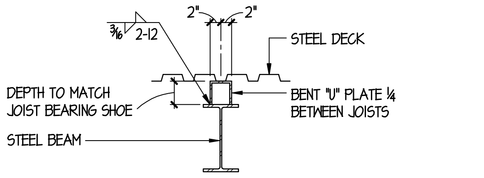

STEEL DECK CONN @ BEAM

SCALE ¾" = 1'-0" S5400 (11)

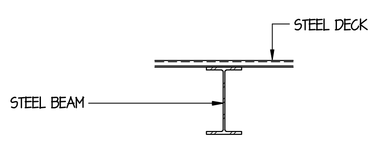

STEEL DECK CONN @ BEAM

SCALE ¾" = 1'-0" S5401 (12)

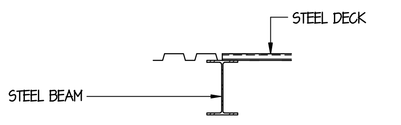

STEEL DECK CONN @ BEAM

SCALE ¾" = 1'-0" S5402 (13)

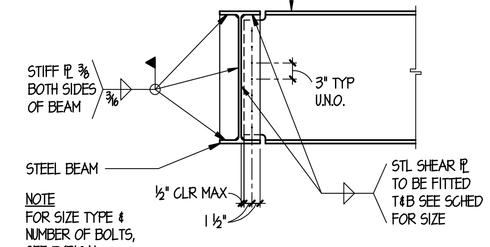

ONE-SIDED BEAM TO BEAM CONN

SCALE ¾" = 1'-0" S5002 (14)

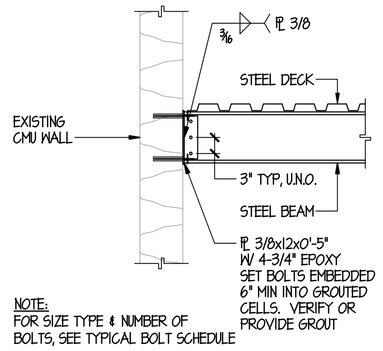

STEEL BEAM @ EXISTING C.M.U. WALL

SCALE 3/4" =1'-0" 0818254 (15)

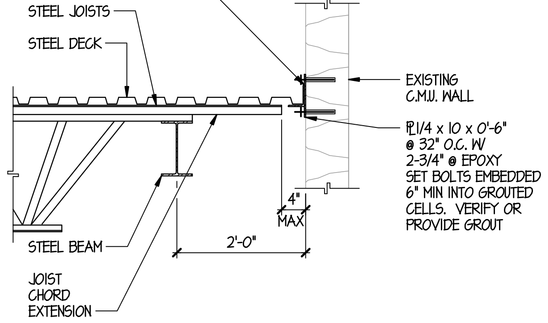

JOIST CHORD EXTENSION AT EXISTING WALL

SCALE ¾" = 1'-0" 0818254 (16)

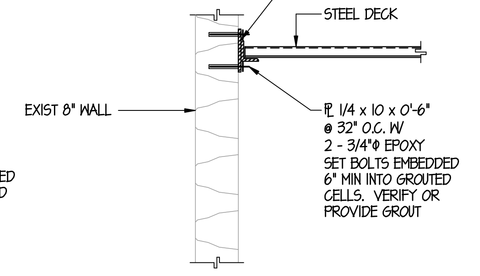

TYP LEDGER ANGLE - BEARING @ EXIST WALL

SCALE ¾" = 1'-0" S2411 (17)

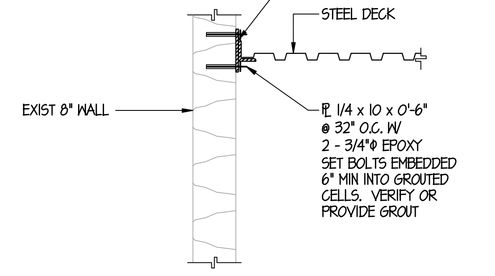

TYP LEDGER ANGLE - NON-BEARING @ EXIST WALL

SCALE ¾" = 1'-0" S2410 (18)

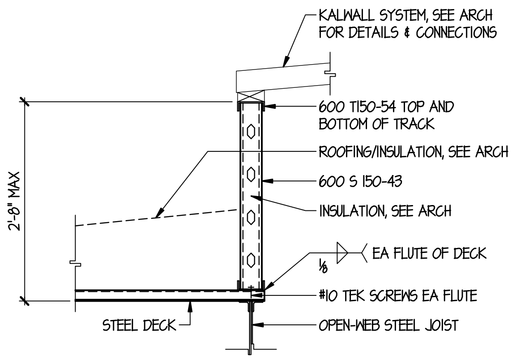

KALWALL @ STEEL JOISTS

SCALE ¾" = 1'-0" 0818254 (19)

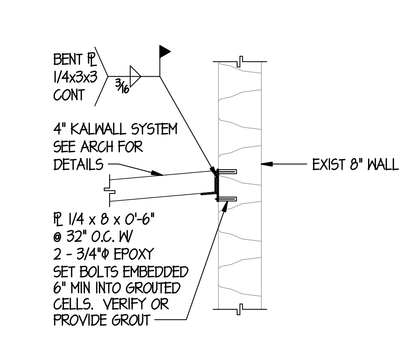

KALWALL @ EXISTING WALL

SCALE ¾" = 1'-0" 0818254 (20)

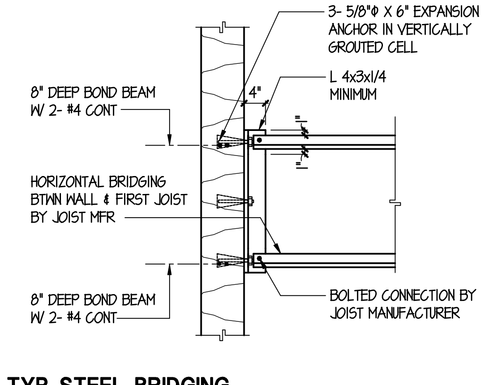

TYP STEEL BRIDGING @ MASONRY WALL

SCALE ¾" = 1'-0" M2501 (21)

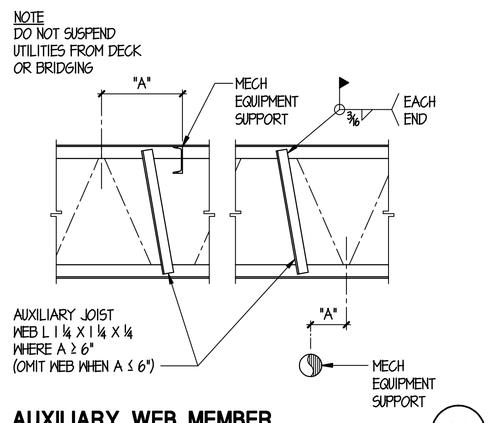

AUXILIARY WEB MEMBER

NO SCALE S1005 (22)

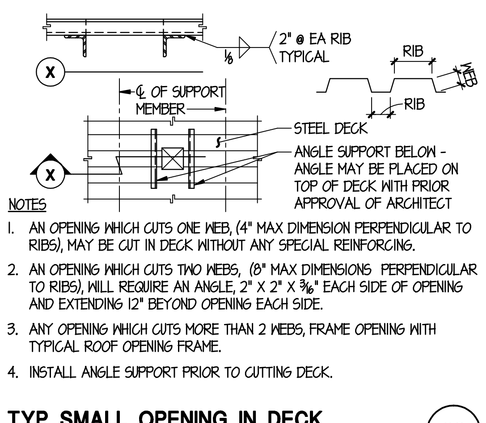

TYP SMALL OPENING IN DECK

NO SCALE S1004 (23)

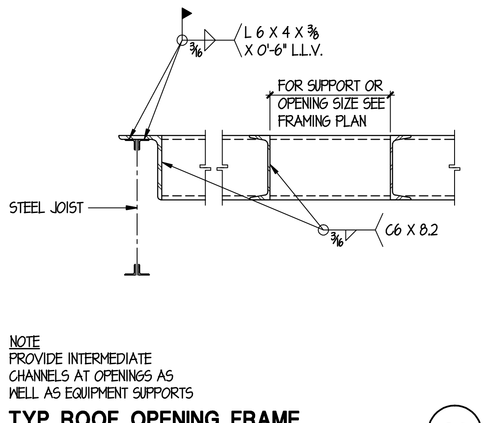

TYP ROOF OPENING FRAME

NO SCALE S1002 (24)

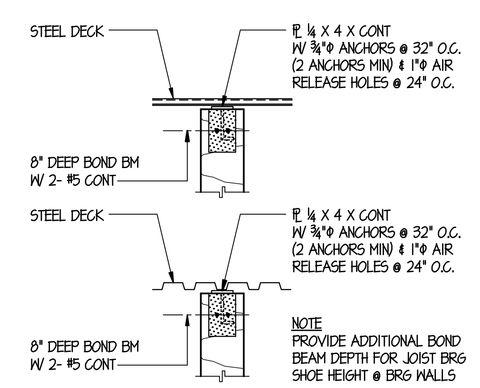

DECK CONN @ C.M.U. WALL

SCALE ¾" = 1'-0" S2421 (25)

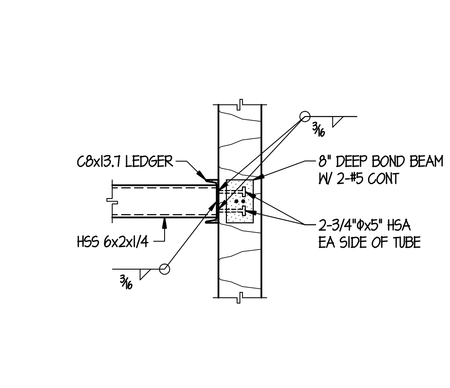

STEEL TUBE BEARING @ CMU WALL

SCALE ¾" = 1'-0" 0818254 (26)

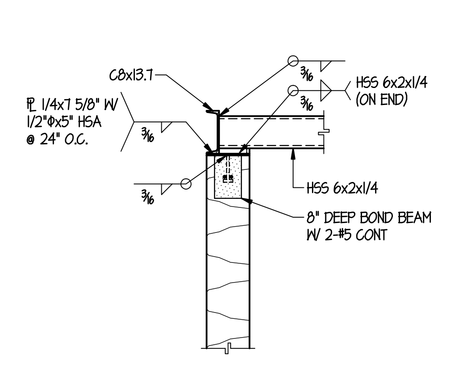

STEEL TUBE BEARING @ CMU WALL

SCALE ¾" = 1'-0" 0818254 (27)

GRESHAM BEACH
ARCHITECTS INC.
177 NORTH CHURCH AVENUE
SUITE 755
TUCSON, ARIZONA. 85701
TEL.520.882.0698
FAX.520.882.0989

PROFESSIONAL ENGINEER
CERTIFICATE NO.
21
GREGORY C. STRUCTON, JR.
ARIZONA, USA
EXPIRES 6/30/2010

STRUCTURAL CONCEPTS INC.
CONSULTING ENGINEERS
(520) 721-2324
(520) 885-3507 FAX
8230 E. BROADWAY SUITE W-7
TUCSON, ARIZONA 85710

CITY OF TUCSON
FACILITIES DESIGN & MANAGEMENT DIVISION

EL PUEBLO ACTIVITY CENTER

5100 S. MISSIONDALE RD.
TUCSON, AZ

REVISIONS

Number	Date	By

Designed	GRS
Drawn	JCR
Checked	GRS
Date	10/29/08
Job Number	27010.00

S4

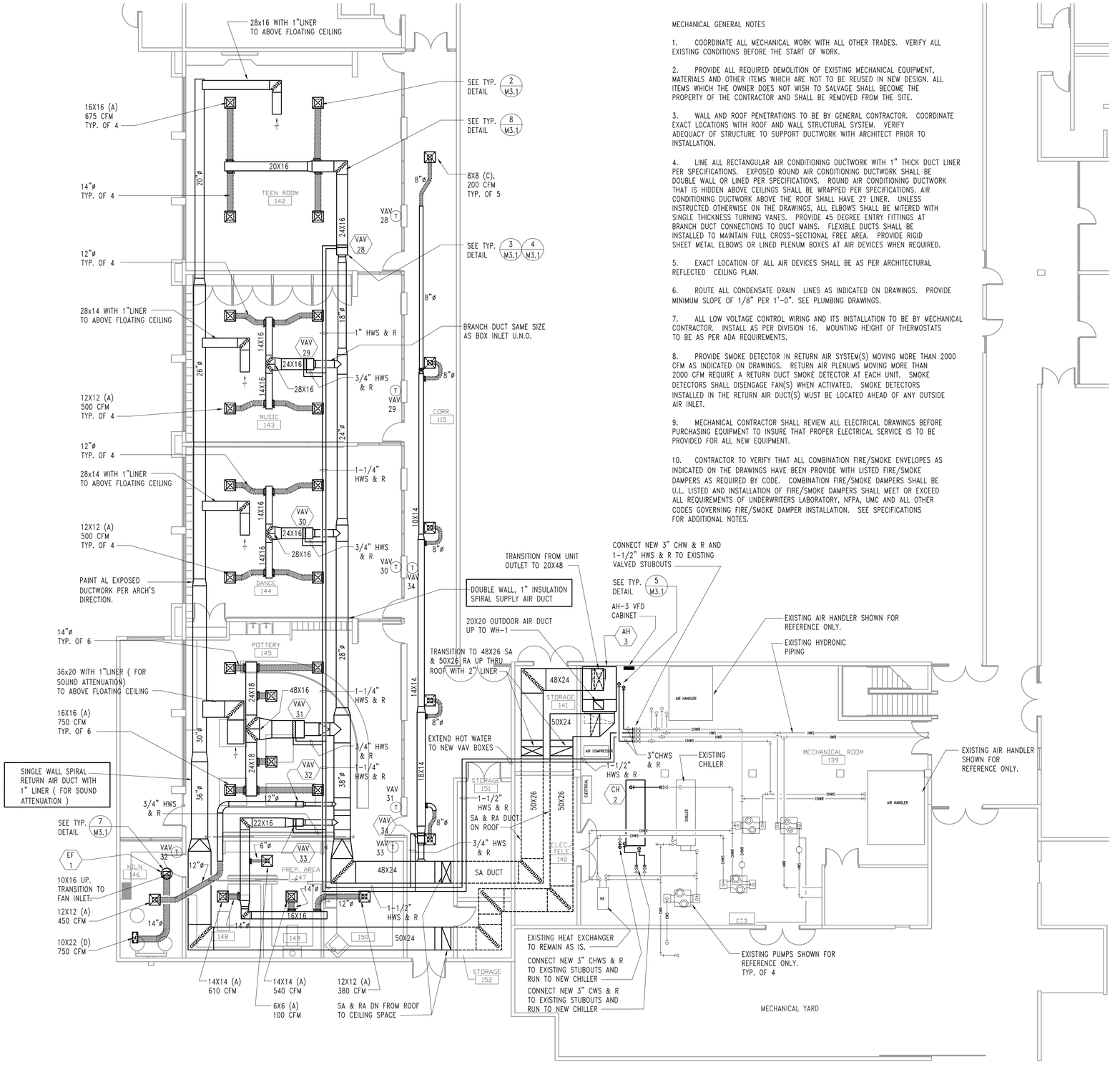

MECHANICAL GENERAL NOTES

1. COORDINATE ALL MECHANICAL WORK WITH ALL OTHER TRADES. VERIFY ALL EXISTING CONDITIONS BEFORE THE START OF WORK.

2. PROVIDE ALL REQUIRED DEMOLITION OF EXISTING MECHANICAL EQUIPMENT, MATERIALS AND OTHER ITEMS WHICH ARE NOT TO BE REUSED IN NEW DESIGN. ALL ITEMS WHICH THE OWNER DOES NOT WISH TO SALVAGE SHALL BECOME THE PROPERTY OF THE CONTRACTOR AND SHALL BE REMOVED FROM THE SITE.

3. WALL AND ROOF PENETRATIONS TO BE BY GENERAL CONTRACTOR. COORDINATE EXACT LOCATIONS WITH ROOF AND WALL STRUCTURAL SYSTEM. VERIFY ADEQUACY OF STRUCTURE TO SUPPORT DUCTWORK WITH ARCHITECT PRIOR TO INSTALLATION.

4. LINE ALL RECTANGULAR AIR CONDITIONING DUCTWORK WITH 1" THICK DUCT LINER PER SPECIFICATIONS. EXPOSED ROUND AIR CONDITIONING DUCTWORK SHALL BE DOUBLE WALL OR LINED PER SPECIFICATIONS. ROUND AIR CONDITIONING DUCTWORK THAT IS HIDDEN ABOVE CEILINGS SHALL BE WRAPPED PER SPECIFICATIONS. AIR CONDITIONING DUCTWORK ABOVE THE ROOF SHALL HAVE 2? LINER. UNLESS INSTRUCTED OTHERWISE ON THE DRAWINGS, ALL ELBOWS SHALL BE MITERED WITH SINGLE THICKNESS TURNING VANES. PROVIDE 45 DEGREE ENTRY FITTINGS AT BRANCH DUCT CONNECTIONS TO DUCT MAINS. FLEXIBLE DUCTS SHALL BE INSTALLED TO MAINTAIN FULL CROSS-SECTIONAL FREE AREA. PROVIDE RIGID SHEET METAL ELBOWS OR LINED PLENUM BOXES AT AIR DEVICES WHEN REQUIRED.

5. EXACT LOCATION OF ALL AIR DEVICES SHALL BE AS PER ARCHITECTURAL REFLECTED CEILING PLAN.

6. ROUTE ALL CONDENSATE DRAIN LINES AS INDICATED ON DRAWINGS. PROVIDE MINIMUM SLOPE OF 1/8" PER 1'-0". SEE PLUMBING DRAWINGS.

7. ALL LOW VOLTAGE CONTROL WIRING AND ITS INSTALLATION TO BE BY MECHANICAL CONTRACTOR. INSTALL AS PER DIVISION 16. MOUNTING HEIGHT OF THERMOSTATS TO BE AS PER ADA REQUIREMENTS.

8. PROVIDE SMOKE DETECTOR IN RETURN AIR SYSTEM(S) MOVING MORE THAN 2000 CFM AS INDICATED ON DRAWINGS. RETURN AIR PLENUMS MOVING MORE THAN 2000 CFM REQUIRE A RETURN DUCT SMOKE DETECTOR AT EACH UNIT. SMOKE DETECTORS SHALL DISENGAGE FAN(S) WHEN ACTIVATED. SMOKE DETECTORS INSTALLED IN THE RETURN AIR DUCT(S) MUST BE LOCATED AHEAD OF ANY OUTSIDE AIR INLET.

9. MECHANICAL CONTRACTOR SHALL REVIEW ALL ELECTRICAL DRAWINGS BEFORE PURCHASING EQUIPMENT TO INSURE THAT PROPER ELECTRICAL SERVICE IS TO BE PROVIDED FOR ALL NEW EQUIPMENT.

10. CONTRACTOR TO VERIFY THAT ALL COMBINATION FIRE/SMOKE ENVELOPES AS INDICATED ON THE DRAWINGS HAVE BEEN PROVIDE WITH LISTED FIRE/SMOKE DAMPERS AS REQUIRED BY CODE. COMBINATION FIRE/SMOKE DAMPERS SHALL BE U.L. LISTED AND INSTALLATION OF FIRE/SMOKE DAMPERS SHALL MEET OR EXCEED ALL REQUIREMENTS OF UNDERWRITERS LABORATORY, NFPA, UMC AND ALL OTHER CODES GOVERNING FIRE/SMOKE DAMPER INSTALLATION. SEE SPECIFICATIONS FOR ADDITIONAL NOTES.

1 **MECHANICAL DEMOLITION PLAN**

NORTH

1/4" = 1'-0"

0 1' 2' 4' 6'

GRESHAM BEACH
ARCHITECTS INC.
177 NORTH CHURCH AVENUE
SUITE 255
TUCSON, ARIZONA 85701
TEL. 520.882.0698
FAX. 520.882.0989

50% CONSTRUCTION DOCUMENTS NOT FOR CONSTRUCTION

PRELIMINARY NOT FOR CONSTRUCTION

CITY OF TUCSON
FACILITIES DESIGN & MANAGEMENT DIVISION

EL PUEBLO ACTIVITY CENTER

5100 S. MISSIONDALE RD.
TUCSON, AZ

REVISIONS

Number	Date	By

Designed	KG
Drawn	KG
Checked	
Date	29 OCT 08
Job Number	27010.00

MECHANICAL PLAN

M1.1

OF

KC MECHANICAL ENGINEERING, L.L.C.
5447 East Fifth Street # 112 520/327-7611
Tucson, Arizona 85711 520/327-0432
Designers Mech: KRG Plumb: PLZ 18408

TERMINAL UNIT SCHEDULE	NOTE: VAV-1 THRU 27 ARE EXISTING						
MARK	VAV-28	VAV-29	VAV-30	VAV-31	VAV-32	VAV-33	VAV-34
INLET	16	16	16	24X16	8	14	12
MAXIMUM AIR FLOW (CFM)	2700	2000	2000	4500	450	1630	1000
MINIMUM AIR FLOW (CFM)	1400	1000	1000	1500	0	800	500
REHEAT MBH	58	45	45	65	NA	41	24
REHEAT GPM	4	3	3	3	NA	3	2
ENTERING WATER TEMPERATURE (DEG. F.)	160	160	160	160	NA	160	160
REFERENCE	KRUEGER LMHS-16	KRUEGER LMHS-16	KRUEGER LMHS-16	KRUEGER LMHS-22	KRUEGER LMHS-8	KRUEGER LMHS-14	KRUEGER LMHS-12
NOTES	1,2,3,4,5	1,2,3,4,5	1,2,3,4,5	1,2,3,4,5	1,2,3,4,5	1,2,3,4,5	1,2,3,4,5

1. REHEAT CAPACITY IS W/55F EAT AND 160F EWT.
2. TERMINAL UNIT AND ASSOCIATED CONTROLS SHALL BE INSTALLED PER MANUFACTURER'S INSTRUCTIONS.
3. PROVIDE INLET SENSOR, DAMPER, 120/24VAC TRANSFORMER AND CONTROL ENCLOSURE.
4. TERMINAL UNIT SHALL OPERATE PRESSURE INDEPENDENTLY.
5. PROVIDE 1/2" FOIL FACED LINER OR 3/8" FOAM LINER.

AIR HANDLING UNIT SCHEDULE	
MARK	AH-3
TYPE	INDOOR, CHILLED WATER
PRESSURE CLASS	1
SERVICE	
MAXIMUM WEIGHT (LBS)	4300
MAXIMUM SUPPLY AIR FLOW (CFM)	15,000
MINIMUM O.A. INTAKE (CFM)	3,500
EXTERNAL STATIC PRESSURE (IN. W.G.)	2
SUPPLY FAN TYPE	F.C.
SUPPLY FAN RPM	930
SUPPLY FAN MOTOR HP	15
SUPPLY FAN WHEEL DIAMETER (IN.)	20
SUPPLY AIR VOLUME CONTROL	VFD
HEATING ENERGY SOURCE	NA
MINIMUM HEATING CAPACITY (MBH)	NA
HEATING WATER GPM	NA
ENTERING HEATING WATER TEMPERATURE (DEG. F)	NA
ENTERING AIR TEMPERATURE (DB DEG. F)	NA
MAXIMUM WATER PRESSURE DROP (ft. w.g.)	NA
MAXIMUM HEATING COIL FACE VELOCITY (FPM)	NA
COOLING ENERGY SOURCE	CHILLED WATER
MINIMUM TOTAL COOLING CAPACITY (MBH)	420
MINIMUM SENSIBLE COOLING CAPACITY (MBH)	400
CHILLED WATER GPM	90
ENTERING CHILLED WATER TEMPERATURE (DEG. F)	45
ENTERING AIR TEMPERATURE (DB/WB DEG. F)	83/64
MAXIMUM WATER PRESSURE DROP (ft. w.g.)	6
MAXIMUM COOLING COIL FACE VELOCITY	500
FILTER TYPE	2" PLEATED, 30%
FILTER MINIMUM FACE AREA (SQ.FT.)	44
REFERENCE	CARRIER 39MN30

NOTES
1. CAPACITY SCHEDULED SHALL BE FOR 2500 FT. ELEVATION.
2. PROVIDE 100% OUTSIDE AIR INTAKE & 100% EXHAUST AIR LOUVERS W/BIRDSCREEN & CONTROL DAMPERS FOR ECONOMIZER CYCLE OPERATION.
3. PROVIDE SPRING VIBRATION ISOLATORS AT SUPPLY & RETURN FANS SIZED & INSTALLED BY MANUFACTURERS.
4. PROVIDE ACCESS DOORS TO INSURE PROPER SERVICING FOR ALL UNIT COMPONENTS.
5. PROVIDE BELL MOUTH FITTING @ OUTLET FOR CONNECTION TO SUPPLY DUCT.
6. REFER TO SPECIFICATIONS & DRAWINGS FOR ADDITIONAL REQUIREMENTS.
7. MANUFACTURER SHALL INSURE AIR HANDLING UNIT FANS & MOTORS ARE SIZED ADEQUATELY FOR INTERNAL & EXTERNAL STATIC PRESSURE. FAN OR MOTOR SIZE SHALL NOT INCREASE DUE TO EXCESSIVE INTERNAL STATIC PRESSURE.

FAN SCHEDULE	
MARK	EF-1
SERVICE	HEAT EXHAUST
TYPE	ROOFTOP CENTRIFUGAL
WHEEL TYPE	B.I.
AIR FLOW (CFM)	750
T.S.P. ("w.g.)	0.25
DRIVE TYPE	BELT
MAXIMUM SONES	7
MOTOR HP	1/4
VOLTS/PHASE/HZ	115/1/60
WEIGHT (LBS)	70
REFERENCE	GREENHECK GB 101
NOTES	1,2,3,4

1. SCHEDULE CAPACITY SHALL BE FOR 2500 FT. ELEVATION.
2. PROVIDE ROOFCURB (FACTORY/SHOP FABRICATED), BIRDSCREEN & BACKDRAFT DAMPER.
3. FAN PERFORMANCE SHALL BE AMCA CERTIFIED.
4. FAN ACTIVATED BY WALL SWITCH. PROVIDED BY ELECTRICAL.

AIR DEVICE SCHEDULE				
MARK	A	B	C	D
SERVICE	SUPPLY	SUPPLY	RETURN	EXHAUST
MATERIAL	STEEL	STEEL	ALUM	ALUM
FINISH	WHITE	WHITE	WHITE	WHITE
PATTERN	4-WAY	3-WAY	EGGCRATE	EGGCRATE
REFERENCE	KRUEGER 6204	KRUEGER 6203	KRUEGER EGC5	KRUEGER EGC5
NOTES	1,2,3,4	1,2,3,4	2	1,2

1. PROVIDE OPPOSED BLADE DAMPER.
2. PROVIDE FRAME STYLE SUITABLE FOR CEILING OR WALL SPECIFIED ON ARCH. DRAWINGS.
3. CEILING DIFFUSER SHALL BE PERFORATED TYPE.
4. PROVIDE SQUARE TO ROUND ADAPTORS WHEN REQUIRED.

OUTDOOR AIR CALCULATION
EL PUEBLO CLASSROOM ADDITION SMU18408

BUILDING UNIT	ROOM NUM.	ROOM NAME	BASE ROOM AREA (SQ FT)	NO. OF UNITS (FOR WC ONLY)	CODE	OCCUPANCY CATEGORY	ZONE POPULATION (Pz)	ZONE AIR DISTRIBUTION EFFECTIVENESS (TABLE 6.2) Ez CODE	DESIGN SUPPLY AIR FLOW (CFM)	SYSTEM POPULATION (Ps)	TOTAL REQUIRED EXHAUST VENTILATION (CFM)	OUTDOOR AIR INTAKE REQUIRED (CFM)	NOTES
	142	TEEN ROOM	1,560	0	7	CLASSROOMS (AGE 9 PLUS)	54.6	CSCR	2,400				
	143	MUSIC	1,215	0	7	CLASSROOMS (AGE 9 PLUS)	42.5	CSCR	2,000				
	144	DANCE	1,215	0	7	CLASSROOMS (AGE 9 PLUS)	42.5	CSCR	2,000				
	145	POTTERY	1,545	0	7	CLASSROOMS (AGE 9 PLUS)	54.1	CSCR	2,400				
	146	KILN	245	0	27	OFFICE SPACE	1.2	CSCR	300				
	148		185	0	27	OFFICE SPACE	0.9	CSCR	200				
	149		145	0	27	OFFICE SPACE	0.7	CSCR	150				
	150		310	0	27	OFFICE SPACE	1.6	CSCR	300				
		CORRIDOR	1,880	0	21	CORRIDORS	0.0	CSCR	1,200				
			8,300				198.2		10,950	198	0	3,196	

CHILLER SCHEDULE	
MARK	CH-1
TYPE	WATER COOLED RECIPROCATING
MINIMUM COOLING CAPACITY (TONS)	40
MINIMUM EFFICIENCY (IPLV)	
COMPRESSOR INPUT POWER (KW)	34.5
LEAVING CHILLED WATER TEMPERATURE (DEG. F)	45.0
EVAPORATIVE WATER FLOW (GPM)	100
EVAPORATIVE FOULING FACTOR	0.0001
MAXIMUM EVAPORATIVE WATER PRESSURE DROP (FT.)	14.0
ENTERING CONDENSER WATER TEMPERATURE (DEG. F)	85.0
CONDENSER FOULING FACTOR	0.00025
MAXIMUM CONDENSER WATER PRESSURE DROP (FT.)	6.0
CONDENSER WATER FLOW (GPM)	1234
NUMBER OF COMPRESSORS	2
MINIMUM NUMBER OF COOLING STAGES	2
VOLTS/PHASE/HZ	460/3/60
UNIT MINIMUM CIRCUIT AMPS (MCA)	59
UNIT MAXIMUM FUSE AMPS	70
UNIT MAXIMUM MOCP	80
UNIT OPERATING WEIGHT (LBS.)	2830
REFRIGERANT CHARGE (LBS.)	70.0
REFERENCE	CARRIER 30HK040
NOTES	1 THRU 10

1. SCHEDULED CAPACITY SHALL BE FOR 2500 FT. ELEVATION.
2. THE CHILLER SHALL BE FACTORY PERFORMANCE TESTED WITH THE PROPOSED REFRIGERANT UNDER FULL LOAD CALCULATIONS IN AN ARI CERTIFIED TEST FACILITY.
3. CHILLER CAPACITY CONTROL SHALL BE FACTORY INSTALLED & SET TO HAVE MULTIPLE STEP CONTROLLER MAINTAIN CAPACITY BASED ON CHILLED WATER RETURN TEMPERATURE.
4. PROVIDE WATER FLOW SWITCH TO BE FIELD INSTALLED.
5. PROVIDE ACOUSTICAL BLANKETS FOR COMPRESSORS.
6. PROVIDE 115/1/60 CONTROL POWER TRANSFORMER FOR ALL CONTROL REQUIREMENTS.
7. PROVIDE BACNET CONTROL INTERFACE CONNECTION.
8. PROVIDE SINGLE-POINT POWER CONNECTION.
9. MOTOR STARTER SHALL BE UNIT-MOUNTED WYE-DELTA AND SHALL HAVE A NEMA 1A GASKETED ENCLOSURE.
10. WITH HOT GAS BY-PASS

GRESHAM BEACH ARCHITECTS INC.
177 NORTH CHURCH AVENUE
SUITE 255
TUCSON, ARIZONA 85701
TEL. 520.882.0698
FAX. 520.882.0989

50% CONSTRUCTION DOCUMENTS NOT FOR CONSTRUCTION

PRELIMINARY NOT FOR CONSTRUCTION

CITY OF TUCSON
FACILITIES DESIGN & MANAGEMENT DIVISION

EL PUEBLO ACTIVITY CENTER

5100 S. MISSIONDALE RD.
TUCSON, AZ

REVISIONS

Number	Date	By

Designed	KG
Drawn	KG
Checked	
Date	29 OCT 08
Job Number	27010.00

MECHANICAL SCHEDULES

M2.1

OF

KC MECHANICAL ENGINEERING, L.L.C.
5447 East Fifth Street # 112 520/327-7611
Tucson, Arizona 85711 520/327-0432
Designers Mech: KRG Plumb: PLZ 18408

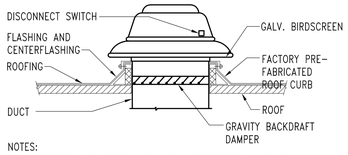

NOTES:
1. SECURE FAN TO ROOF CURB USING SHEETMETAL SCREWS, TWO PER SIDE, MAXIMUM 24 IN. ON CENTER
2. REFER TO ARCHITECTURAL DRAWINGS FOR DETAILS OF ROOF CONSTRUCTION AFFECTING THE FAN AND ROOF CURB INSTALLATION. CONSTRUCTION AFFECTING THE FAN AND ROOF CURB INSTALLATION.
3. FOR PITCHED ROOFS, THE PRE-FABRICATED ROOF CURB SHALL BE DESIGNED SO THAT THE FAN IS MOUNTED LEVEL.

ROOF MOUNTED EXHAUST FAN DETAIL

NO SCALE — 7 / M3.1

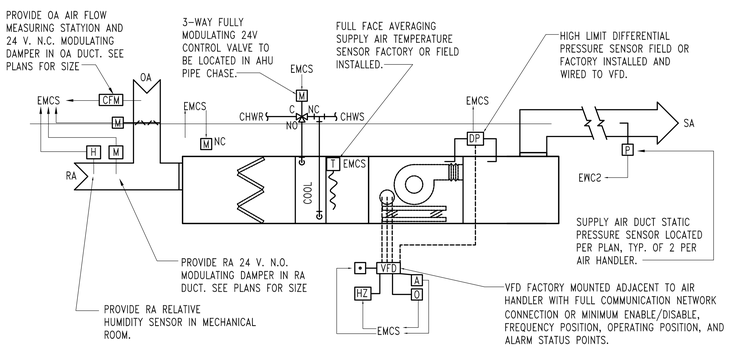

AIR HANDLER CONTROL SCHEMATIC

NO SCALE — 8 / M3.1

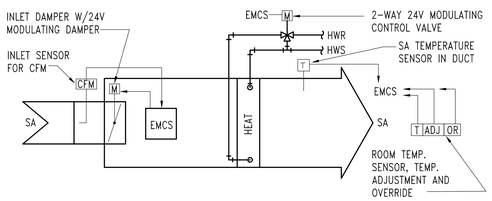

TERMINAL UNIT WITH REHEAT SCHEMATIC

NO SCALE — 9 / M3.1

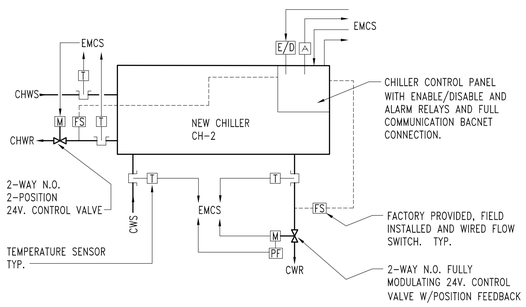

CHILLER CONTROL DIAGRAM

NO SCALE — 10 / M3.1

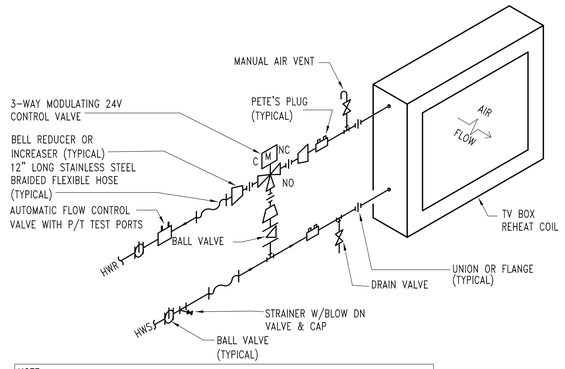

NOTE:
1. SUPPORT PIPING AT BALL VALVES AND COIL CONNECTIONS.
2. ALL VALVES MUST BE WITHIN 24" FROM COIL.
3. MANUFACTURED VALVE ASSEMBLY MEETING THESE REQUIREMENTS IS ACCEPTABLE.

RE-HEAT COIL SCHEMATIC (VAV BOX)

NO SCALE — 4 / M3.1

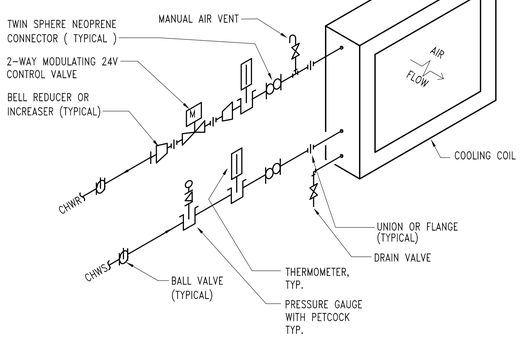

COOLING COIL PIPING SCHEMATIC (FOR AHU)

NO SCALE — 5 / M3.1

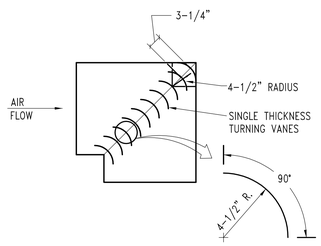

MITER ELBOW WITH TURNING VANES

NONE — 6 / M3.1

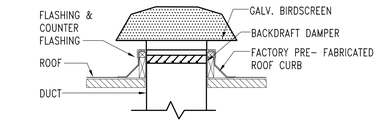

NOTES:
1. SECURE TO ROOF CURB USING LAG BOLTS, MINIMUM TWO PER SIDE, MAXIMUM 8" ON CENTER.
2. WHERE THERE IS INSULATION ABOVE ROOF, USE ROOF CURB DESIGNED TO ACCEPT INSULATION. MOUNT CURB ON ROOF SURFACE NOT ON TOP OF INSULATION.
3. FOR PITCHED ROOFS, THE PRE-FABRICATED ROOF CURB SHALL BE DESIGNED SO THAT THE HOOD IS MOUNTED LEVEL.

ROOF MTD. WEATHERHOOD

NO SCALE — 1 / M3.1

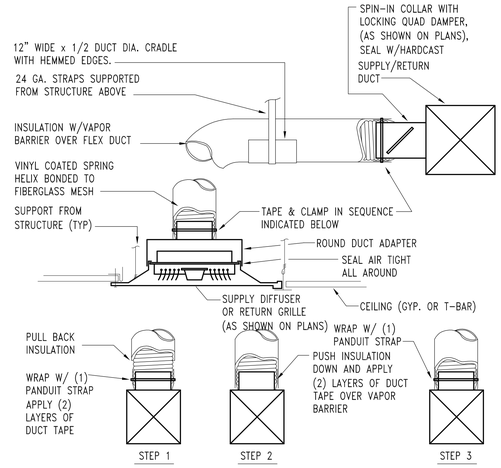

NOTE:
MAXIMUM DUCT LENGTH SHALL BE LIMITED TO 8'-0". PROVIDE RIGID METAL OF EQUAL DIAMETER FOR ALL SIZES INDICATED ON THE CONTRACT DRAWINGS

AIR DEVICE AND FLEXIBLE DUCT DETAILS

NO SCALE — 2 / M3.1

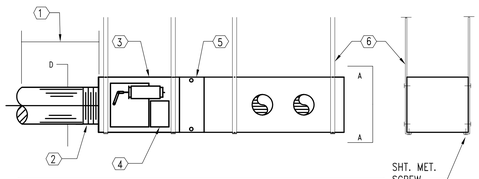

NOTES
1. MEDIUM PRESS. SUP. DUCT, MIN. 3XD STRAIGHT RUN.
2. FLEX CONNECTION EQUAL OF THERMAFLEX MODEL M-KC (MAXIMUM 18" LENGTH WITH NO OFFSETS.)
3. SINGLE DUCT TERMINAL UNIT.
4. DAMPER COIL ACCESS DOOR, OPTION BOTTOM LOCATION.
5. REHEAT COIL SEE SCHEDULE AND COIL PIPING DETAIL.
6. DUCT HANGER STRAPS. ATTACH AS SHOWN.

SINGLE DUCT TERMINAL UNIT

NO SCALE — 3 / M3.1

GRESHAM BEACH ARCHITECTS INC.
177 NORTH CHURCH AVENUE
SUITE 755
TUCSON, ARIZONA. 85701
TEL.520.882.0698
FAX.520.882.0989

50% CONSTRUCTION DOCUMENTS NOT FOR CONSTRUCTION

PRELIMINARY NOT FOR CONSTRUCTION

CITY OF TUCSON
FACILITIES DESIGN & MANAGEMENT DIVISION

EL PUEBLO ACTIVITY CENTER

5100 S. MISSIONDALE RD.
TUCSON, AZ

REVISIONS

Number	Date	By

Designed	KG
Drawn	KG
Checked	
Date	29 OCT 08
Job Number	27010.00

MECHANICAL DETAILS

M3.1

OF

KC MECHANICAL ENGINEERING, L.L.C.
5447 East Fifth Street # 112 520/327-7611
Tucson, Arizona 85711 520/327-0432
Designers Mech: KRG Plumb: PLZ 18408

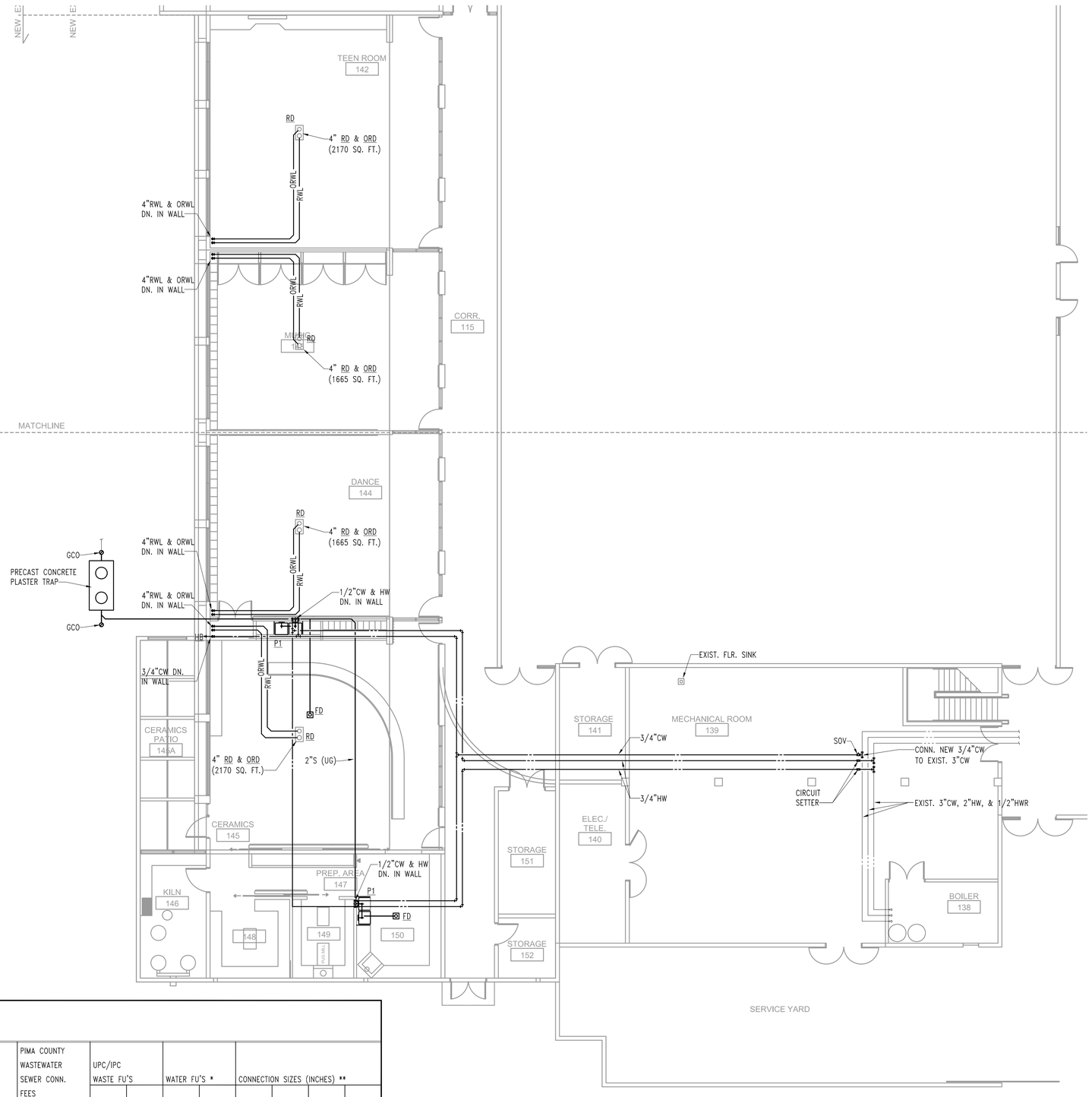

PLUMBING GENERAL NOTES

1. COORDINATE ALL WORK WITH ALL OTHER TRADES. EXACT ROUTING OF ALL PIPING SHALL BE CAREFULLY COORDINATED WITH ALL STRUCTURAL CONDITIONS.
2. CONTRACTOR SHALL VERIFY ALL EXISTING CONDITIONS INCLUDING PIPING LOCATIONS, SIZES, INVERTS AND DIRECTION OF FLOW BEFORE THE START OF WORK.
3. THE TOTAL NUMBER OF FIXTURE UNITS SHOWN FOR THIS PROJECT IS FOR REFERENCE ONLY. CONTRACTOR SHALL VERIFY FIXTURE UNIT TOTAL WITH ADMINISTRATIVE AUTHORITY. FIXTURE UNIT COUNTS INDICATED FOR EACH TYPE OF FIXTURE SHALL BE VERIFIED BY THE ADMINISTRATIVE AUTHORITY AND CONTRACTOR SHALL BE RESPONSIBLE FOR PAYMENT OF TOTAL SEWER CONNECTION FEES IN THE EVENT THAT THIS TOTAL DIFFERS FROM THAT SHOWN ON THE DRAWING. FIXTURE UNITS ARE FOR DETERMINING SEWER CONNECTION FEES. SOIL PIPE SIZING IS BASED ON FIXTURE UNITS DEFINED IN THE UNIFORM PLUMBING CODE.
4. ALL PLUMBING FIXTURES AND EQUIPMENT IDENTIFIED BY A "P" NUMBER SHALL BE FURNISHED AND INSTALLED BY THIS CONTRACTOR, UNLESS NOTED OTHERWISE. SEE PLUMBING SCHEDULES.
5. OFFSET ALL PLUMBING VENTS AS REQUIRED TO INSURE MINIMUM 10'-0" CLEARANCE FROM ALL OUTSIDE AIR INTAKES.
6. WHERE SHUT-OFF VALVE OR OTHER DEVICES ARE CONCEALED IN A HARD CEILING, PROVIDE ACCESS DOORS. SEE SPECIFICATIONS. COORDINATE WITH ARCHITECT.

WET PIPE SPRINKLER SYSTEM

This building contains an existing wet pipe sprinkler system. The new system shall connect to the existing system. Provide hydraulic calculations for the new and existing areas. The contractor shall modify the system to conform with the new architectural floor plan. There will also be an addition to the building. The contractor shall connect to the existing fire sprinkler system to serve the expansion. Location of sprinkler heads for both the existing building and expansion shall be coordinated with architectural reflective ceiling plan (specifically the location of all light fixtures and ceiling air devices). The system provided shall comply with all requirements of NFPA, local and federal codes which govern such work and the specification notes on these drawings. Contractor shall submit detailed calculations and shop drawings for approval by the governing agency.

STANDARD FOR CONSTRUCTION: NFPA 13

IDENTIFICATION OF HAZARD: LIGHT HAZARD

DESIGN DENSITY: 0.10gpm/s.f. OVER 1500 s.f.

PLUMBING FIXTURE SCHEDULE

MARK	FIXTURE	DESCRIPTION	QTY	PIMA COUNTY WASTEWATER SEWER CONN. FEES FU	TOTAL	UPC/IPC WASTE FU'S FU	TOTAL	WATER FU'S * FU	TOTAL	CONNECTION SIZES (INCHES) ** WASTE	VENT	HOT	COLD
P1	2-COMP SINK	ELKAY #8248 2-COMPARTMENT 14 GAUGE, TYPE 304 STAINLESS STEEL, 2-24 X 24 X 14" DEEP COMPARTMENTS, INTEGRAL BACKSPLASH W/4 HOLE PUNCH #S-3 FAUCETS, 2 #S-16 LEVER WASTE DRAINS, TYPE DWV COPPER	2	3	2	4	8	6	12	2	1 1/2	3/4	3/4
FD	FLOOR DRAIN	J.R. SMITH #2005-BP, COATED CAST IRON BODY AND ADJUSTABLE 5" SQUARE NIKALOY STRAINER W/ TRAP PRIMER CONNECTION.	2	2	2	2	4	–	–	2	1 1/2	–	–
RD	ROOF DRAIN	FP&M #850-4N (3N), COATED CAST IRON BODY & DOME STRAINERS COMBINATION ROOF DRAIN AND OVERFLOW DRAIN.	–	–	–			–	–	4RW	–	–	–
HB	HOSE BIBB	WOODFORD #24P-3/4 BRASS HOSE BIBB W/VACUUM BREAKER & REMOVABLE LOOSE KEY HANDLE ATTACHED TO OPERATING STEM.	–	–	–	–	–	2.5, 1	0	–	–	–	3/4
		TOTAL FIXTURE UNITS			4		12		12				

* WATER PIPE SIZED PER 2006 IPC SECTION 604.1 USING 2006 UPC APPENDIX A.

** FIXTURE SERVICE PIPE SIZE SHALL BE THE SIZE INDICATED WITH REDUCER (IF REQ'D) AS CLOSE TO FIXTURE CONNECTION AS POSSIBLE.

GRESHAM BEACH
ARCHITECTS INC.
177 NORTH CHURCH AVENUE
SUITE 755
TUCSON, ARIZONA 85701
TEL. 520.882.0698
FAX. 520.882.0989

50% CONSTRUCTION DOCUMENTS NOT FOR CONSTRUCTION

PRELIMINARY NOT FOR CONSTRUCTION

CITY OF TUCSON
FACILITIES DESIGN & MANAGEMENT DIVISION

EL PUEBLO ACTIVITY CENTER

5100 S. MISSIONDALE RD.
TUCSON, AZ

REVISIONS

Number	Date	By

Designed	PZ
Drawn	PZ
Checked	
Date	29 OCT 08
Job Number	27010.00

PLUMBING PLAN

P1.1

OF

KC MECHANICAL ENGINEERING, L.L.C.
5447 East Fifth Street # 112 520/327-7611
Tucson, Arizona 85711 520/327-0432
Designers Mech: KRG Plumb: PLZ 18408

ELECTRICAL ABBREVIATIONS

A	AMPERE	I/L	INTERLOCK
ABV	ABOVE	IPP	ISOLATED POWER PANEL
AC	ALTERNATING CURRENT	JB	JUNCTION BOX
ACU	ALARM CONTROL UNIT	KO	KNOCK OUT
ADD	ADDENDUM	KW	KILOWATTS
AF	AMPERE FRAME	KVA	KILOVOLT AMPERE
AFF	ABOVE FINISHED FLOOR	LA	LIGHTINING ARRESTER
ANUN	ANUNCIATOR	LOC	LOCATION
ARCH	ARCHITECT/ARCHITECTURAL	LTG	LIGHTING, LIGHT OR LIGHTS
AT	AMPERE TRIP	LTFC	LIQUIDTIGHT FLEXIBLE CONDUIT
ATS	AUTOMATIC TRANSFER SWITCH	MAN	MANUAL
AUTO	AUTOMATIC	MAX	MAXIMUM
AV	AUDIO/VISUAL	MCC	MOTOR CONTROL CENTER
AVR	AUDIO VISUAL RECIEVING PANEL	MECH	MECHANICAL
C	CONDUIT	MIN	MINIMUM
CAB	CABINET	MFGR	MANUFACTURER
CB	CIRCUIT BREAKER	MGA	MEDICAL GAS ALARM
CCT	CIRCUIT	MOD	MOTOR OPERATED DAMPER
CCTV	CLOSED CIRCUIT TELEVISION	MTR	MOTOR
CLG	CEILING	MS	MOTOR STARTER
CM	CONSTRUCTION MANAGER	MSP	MOTOR STARTER PANEL
CMT	CONDUIT EMPTY	MSS	MOTOR STARTER SWITCH
COMB	COMBINATION	MT	EMPTY
CONN	CONNECTION, OR CONNECT	MTD	MOUNTED
CONTR	CONTRACTOR	MTS	MANUAL TRANSFER SWITCH
COOD	COORDINATE	N.C.	NORMALLY CLOSED
CPB	COMMUNICATION PULL BOX	N/C	NURSE CALL
CPT	CONTROL POWER TRANSFORMER	NCC	NURSE CALL CABINET
CRT	CATHODE RAY TUBE	NF	NON FUSED
CT	CURRENT TRANSFORMER	N.O.	NORMALLY OPEN
CV	CARDIOVASCULAR	OP	OPERATE(D)(R)
DC	DIRECT CURRENT	ø	PHASE
DET	DETAIL	P	POLE
DGP	DATA GATHERING PANEL	PB	PUSH BUTTON
DIST	DISTRIBUTION	PF	POWER FACTOR
DIV	DIVISION	PHY	PHYSIOLOGICAL
DM	DOOR MONITOR	PL	PILOT LIGHT
DN	DOWN	PNL	PANEL
DP	DATA PROCESSING	PR	PAIR
DPC	DISTRIBUTION PROCESSING CONTROLLER	PT	POTENTIAL TRANSFORMER
		PTS	PNEUMATIC TUBE STATION
DWG	DRAWING	PTTS	PNEUMATIC TUBE TRANSFER STATION
EA	EACH		
EKG	ELECTROCARDIOGRAPH SYSTEM	PVC	POLYVINYL CHLORIDE
ELECT	ELECTRICAL	PWR	POWER
EMCS	ENERGY MANAGEMENT AND CONTROL SYSTEMS	RECEPT	RECEPTACLE
		REF	REFRIGERATOR
EO	ELECTRICAL OUTLET (RECEPTACLE)	REX	REQUEST TO EXIT
		RM	ROOM
EQ	EQUAL	SCTV	SECURITY CAMERA TV
EQUIP	EQUIPMENT	SHT	SHEET
EXTG	EXISTING	SPC	SPACE
EXPL	EXPLOSION PROOF	SPEC	SPECIFICATION
ELD	END OF LINE DEVICE	SPR	SPARE
EWC	ELECTRIC WATER COOLER	SSW	SAFETY SWITCH
F	FUSED	ST	SHUNT TRIP
FA	FIRE ALARM	STR	STARTER
FD	FUSIBLE DISCONNECT	SW	SWITCH
FDR	FEEDER	SWBD	SWITCHBOARD
FIN	FINISHED	SWGR	SWITCHGEAR
FL	FLOOR	TC	TIME CLOCK
FUT	FUTURE	TDR	TIME DELAY RELAY
FIXT	FIXTURE LTG	TEL	TELEPHONE
FVNR	FULL VOLTAGE NON-REVERSING	TERM	TERMINAL
FWD	FLEXIBLE WIRING DUCT	TRANSF	TRANSFORMER
FWE	FURNISHED WITH EQUIPMENT	TV	TELEVISION
GND	GROUND	TYP	TYPICAL
GFE	GROUND FAULT PROTECTION FOR EQUIPMENT	UNO	UNLESS NOTED OTHERWISE
		UFD	UNDER FLOOR DUCT
GFI	GROUND FAULT INTERRUPTER	UG	UNDERGROUND
HDS	HOSPITAL DATA SYSTEM	UH	UNIT HEATER
HH	HANDHOLE	UPS	UNINTERUPTIBLE POWER SYSTEM
HOA	HAND - OFF - AUTO	V	VOLTS
HP	HORSEPOWER	VA	VOLT AMPERE
HTG	HEATING	VFD	VARIABLE FREQUENCY
HTR	HEATER	W	WATTS
HZ	HERTZ	WP	WEATHERPROOF
IC	INTERRUPTING CAPACITY		
I/C	INTERCOM		

ELECTRICAL DEMOLITION NOTES

1. THE DRAWINGS INDICATE APPROXIMATE LOCATIONS AND QUANTITY OF ITEMS TO BE REMOVED. THE ELECTRICAL CONTRACTOR SHALL VERIFY QUANTITY AND LOCATION OF ITEMS TO BE REMOVED AS NO ALLOWANCE WILL BE MADE BECAUSE OF THE CONTRACTOR'S UNFAMILIARITY WITH THESE DETAILS.
2. ALL ITEMS SCHEDULED FOR RELOCATION SHALL BE CAREFULLY REMOVED IN REVERSE OF ORIGINAL ASSEMBLY OR PLACEMENT AND BE PROTECTED UNTIL RELOCATED. THE CONTRACTOR SHALL CLEAN, REPAIR AND PROVIDE NEW MATERIALS AND APPURTENANCES AS REQUIRED TO COMPLETE INSTALLATION AND RESTORE TO GOOD WORKING ORDER. ALL RELOCATIONS SHALL BE PERFORMED BY SKILLED WORKMEN IN ACCORDANCE WITH STANDARD PRACTICE OF THE TRADES INVOLVED.
3. ITEMS SCHEDULED FOR RELOCATION REQUIRING EXTENSION OF CIRCUITRY, SHALL HAVE THEIR WIRE AND CONDUIT EXTENDED TO THE NEW LOCATION. EXTENDED WIRE AND CONDUIT SHALL BE ROUTED IN SUCH A MANNER SO AS NOT TO INTERFERE WITH THE USE OR ESTHETICS OF ANY AREA IN WHICH IT IS ROUTED. THE CONTRACTOR SHALL BE RESPONSIBLE FOR RELOCATING OR MODIFYING AND RECONNECTING ANY EQUIPMENT ASSOCIATED WITH ITEMS BEING RELOCATED.
4. CIRCUITS WITH ONLY A PORTION OF THE LOAD REMOVED SHALL HAVE THE ASSOCIATED CIRCUITRY REMOVED ONLY TO A POINT OR IN SUCH MANNER THAT THE REMAINING LOAD IS ACTIVE AND IN FIRST CLASS WORKING ORDER. ASSOCIATED CIRCUITRY IS DEFINED AS ALL WIRE, CONDUIT, JUNCTION BOXES, WIRING DEVICES, DEVICE BOXES, FUSES, DISCONNECT SWITCHES, ETC., ASSOCIATED WITH THE ITEM SCHEDULED FOR REMOVAL.
5. ITEMS SCHEDULED FOR REMOVAL WITH CONDUIT IN INACCESSIBLE AREAS SHALL ONLY HAVE THIS CONDUIT EMPTIED AND SEALED OR CAPPED IN A SAFE MANNER ACCEPTABLE TO THE OWNER'S REPRESENTATIVE.
6. WHERE ITEMS SCHEDULED FOR RELOCATION ARE FOUND TO BE IN DAMAGED CONDITION, THE CONTRACTOR SHALL CALL THE ATTENTION OF THE OWNER'S REPRESENTATIVE TO SUCH ITEMS AND RECEIVE FURTHER INSTRUCTIONS PRIOR TO REMOVAL. ITEMS DAMAGED DURING RELOCATION SHALL BE REPAIRED OR REPLACED BY THE CONTRACTOR AT NO ADDITIONAL COST TO THE OWNER.
7. ALL CUTTING AND PATCHING REQUIRED FOR INSTALLATION OF RACEWAYS OR EQUIPMENT SHALL BE PERFORMED BY A TRADESMAN EXPERIENCED IN THE WORK REQUIRED. ALL FINISHES SHALL MATCH EXISTING ADJACENT SURFACES OR AS INDICATED ON ARCHITECTURAL DRAWINGS.
8. THE CONTRACTOR SHALL COORDINATE THE DEMOLITION OF ELECTRICAL DEVICES SCHEDULED FOR RELOCATION WITH THE DEMOLITION CONTRACTOR. REMOVAL OF DEVICES SCHEDULED FOR RELOCATION SHALL BE SCHEDULED PRIOR TO DEMOLITION CONTRACTOR ACTIVITIES.

LIGHTING FIXTURE SCHEDULE

MARK	MANUFACTURER AND MODEL No.	VOLT-AGE	LAMPS	MOUNTING	FINISH	OTHER ACCEPT. MANUF.	REMARKS
A2	ENERGY EFFICIENT PARABOLIC COLUMBIA EMX24-228G-M526-S-U	277V	(2) F28T5/SPX35	GRID	STANDARD	LITHONIA	65 MAX VA
B2	NARROW WRAP AROUND COLUMBIA MWN4-228-U	277V	(2) F28T5/SPX35	PENDANT @ 10' A.F.F	STANDARD	LITHONIA	65 MAX VA
C3	PENDANT MOUNT ACRYLLIC LENS FIXTURE COLUMBIA PM24-328-FSA12-U	277V	(3) F28T5/SPX35	PENDANT @ 10' A.F.F	STANDARD	LITHONIA	95 MAX VA
C4	ENERGY EFFICIENT PARABOLIC COLUMBIA PM24-428-FSA12-U	277V	(4) F28T5/SPX35	PENDANT @ 10' A.F.F	STANDARD	LITHONIA	130 MAX VA
D2	RECESSED ACRYLLIC LENS TROFFER COLUMBIA ST824-228F-FSA12.125-U	277V	(2) F28T5/SPX35	RECESSED	STANDARD	LITHONIA	65 MAX VA
D3	ENERGY EFFICIENT PARABOLIC COLUMBIA ST824-328G-FSA12.125-EPU	277V	(2) F28T5/SPX35	GRID	STANDARD	LITHONIA	65 MAX VA
E1	6" RECESSED DOWNLIGHT PRESCOLITE LF6CFH1-32-EB-MW32-6CFH1-WT	277V	(1) 32W TRT	RECESSED	STANDARD	LITHONIA	40 MAX VA
F1	8" PENDANT DOWNLIGHT PRESCOLITE CF8P32TEB-CR-WH	277V	(1) 32W TRT	PENDANT @ 10' A.F.F	WHITE	LITHONIA	40 MAX VA
F2	8" WALL MOUNT DOWNLIGHT COLUMBIA CF8W32TEB-CR-WH	277V	(1) 32W TRT	WALL	WHITE	LITHONIA	40 MAX VA
⊗	LED EXIT SIGN DUAL LITE SEMPRA SERIES SE-RWE	277V	INCLUDED	WALL/ CEILING/ PENDANT AS REQUIRED	STANDARD	LITHONIA	5 MAX VA

NOTES: 1. FIXTURE SCHEDULE INDICATES GENERAL DESCRIPTION OF LIGHTING FIXTURES AND MANUFACTURERS CATALOG NUMBERS. IT SHALL BE THE CONTRACTORS RESPONSIBILITY TO DETERMINE THE CORRECT CEILING CONFIGURATION AND PROVIDE THE FIXTURES WITH ALL NECESSARY TRIMS AND MOUNTING HARDWARE SO THAT BOTH THE CEILING SYSTEM AND THE FIXTURE CONSTRUCTION MATCH.

2. IT SHALL BE THE CONTRACTORS RESPONSIBILITY TO VERIFY EXACT LOCATIONS OF ALL LIGHTING FIXTURES AND TYPE OF CEILING WITH THE ARCHITECTURAL REFLECTED CEILING PLAN PRIOR TO ANY WORK. REFER TO ARCHITECTURAL ELEVATION DRAWINGS FOR MOUNTING HEIGHTS OF WALL MOUNTED FIXTURES.

3. PROVIDE 90 MINUTE, 1100 LUMEN BATTERY BACKUP WHERE INDICATED ON DRAWINGS.

ELECTRICAL SYMBOLS

LIGHTING FIXTURES:

FIXTURE TYPE DESIGNATION — A
CIRCUIT NUMBER — 3
SWITCH REFERENCE — a

LIGHT FIXTURES ON NORMAL LIGHTING CIRCUIT:

2X4 | 3' STRIP | DN LTG | 2X2

LIGHT FIXTURES WITH BATTERY BACK UP:

2X4 | 3' STRIP | DN LTG | 2X2

EXIT LIGHT FIXTURE WITH DIRECTIONAL ARROW(S)
SHADED AREA INDICATES ILLUMINATED FACE(S)

SWITCHES

S	SINGLE POLE SWITCH	42" (U.O.N.)
S_3	THREE WAY SWITCH	42" (U.O.N.)
S_4	FOUR WAY SWITCH	42" (U.O.N.)
S^M	MANUAL MOTOR STARTER SWITCH. . . . . WITH THERMAL PROTECTION.	42" (U.O.N.)

SPECIAL SYSTEMS DEVICES

CEILING MOUNTED CLOSED CIRCUIT TV CAMERA
CEILING MOUNTED PUBLIC ADDRESS SPEAKER

FIRE ALARM DEVICES

F	FIRE ALARM HEAT DETECTOR
F	FIRE ALARM MANUAL STATION . . . . . (42" U.O.N.)
F	FIRE ALARM HORN/SPEAKER . . . . . (80" U.O.N.)
F	FIRE ALARM HORN WITH LIGHT . . . . . (80" U.O.N.)
F	FIRE ALARM LIGHT ONLY . . . . . (80" U.O.N.)
	FIRE ALARM SYSTEM CONTROL PANEL/TRANSPONDER
S	SMOKE DETECTOR
SD	DUCT SMOKE DETECTOR

POWER DEVICES

	RECEPTACLE (DUPLEX) . . . . . 18" (U.O.N.)
	RECEPTACLE (QUADRAPLEX) . . . . . 18" (U.O.N.)
M	MOTOR - NUMBER INDICATES HORSE POWER
J J	JUNCTION BOX - WALL/CLG MOUNTED
3	KEYED NOTE - SEE NOTE SCHEDULE ON SAME DRAWING

DISTRIBUTION EQUIPMENT

DISCONNECT SWITCH. SEE OVERCURRENT DEVICE KEY
PANELBOARD

RACEWAY

HOME RUN
(2) #12 AWG, #12 GRD., 3/4" C. (U.O.N)
INDICATES GROUND CONDUCTOR
INDICATES PHASE CONDUCTORS
INDICATES NEUTRAL CONDUCTOR
LP1-1 — INDICATES CIRCUIT NUMBERS; INDICATES PANEL IDENTIFICATION
DASHED LINE INDICATES CONDUIT ROUTED UNDERGROUND
RACEWAY TURNING UP
RACEWAY TURNING DOWN
C — RACEWAY - (C) CAPPED, (B) BUSHED

OVERCURRENT DEVICE KEY

CIR. BRKR.	DESCRIPTION	FUSED SWT.	DESCRIPTION
3 / 150 / 225 / 50	NO. OF POLES BREAKER TRIP SIZE BREAKER FRAME SIZE AIC RATING X 1000	3 / 150 / 200 / RK-1	NO. OF POLES FUSE SIZE SWT. FRAME SIZE UL FUSE CLASS

BOWDEN ENGINEERING, INC.
ELECTRICAL CONSULTING ENGINEERS
7337 E. Tanque Verde Road
Tucson, Arizona 85715
Voice (520)326-8020
Fax (520)326-8013
Job Number: 0814

GRESHAM BEACH ARCHITECTS INC.
177 NORTH CHURCH AVENUE
SUITE 755
TUCSON, ARIZONA 85701
TEL. 520.882.0698
FAX. 520.882.0989

50% CONSTRUCTION DOCUMENTS NOT FOR CONSTRUCTION

CITY OF TUCSON
FACILITIES DESIGN & MANAGEMENT DIVISION

EL PUEBLO ACTIVITY CENTER

5100 S. MISSIONDALE RD.
TUCSON, AZ

REVISIONS

Number	Date	By

Designed	MJ/EG
Drawn	LR
Checked	PB
Date	15 SEP 08
Job Number	27010.00

SYMBOLS & ABBREVIATIONS, FIXXTURE SCHEDULE

E0.1

OF

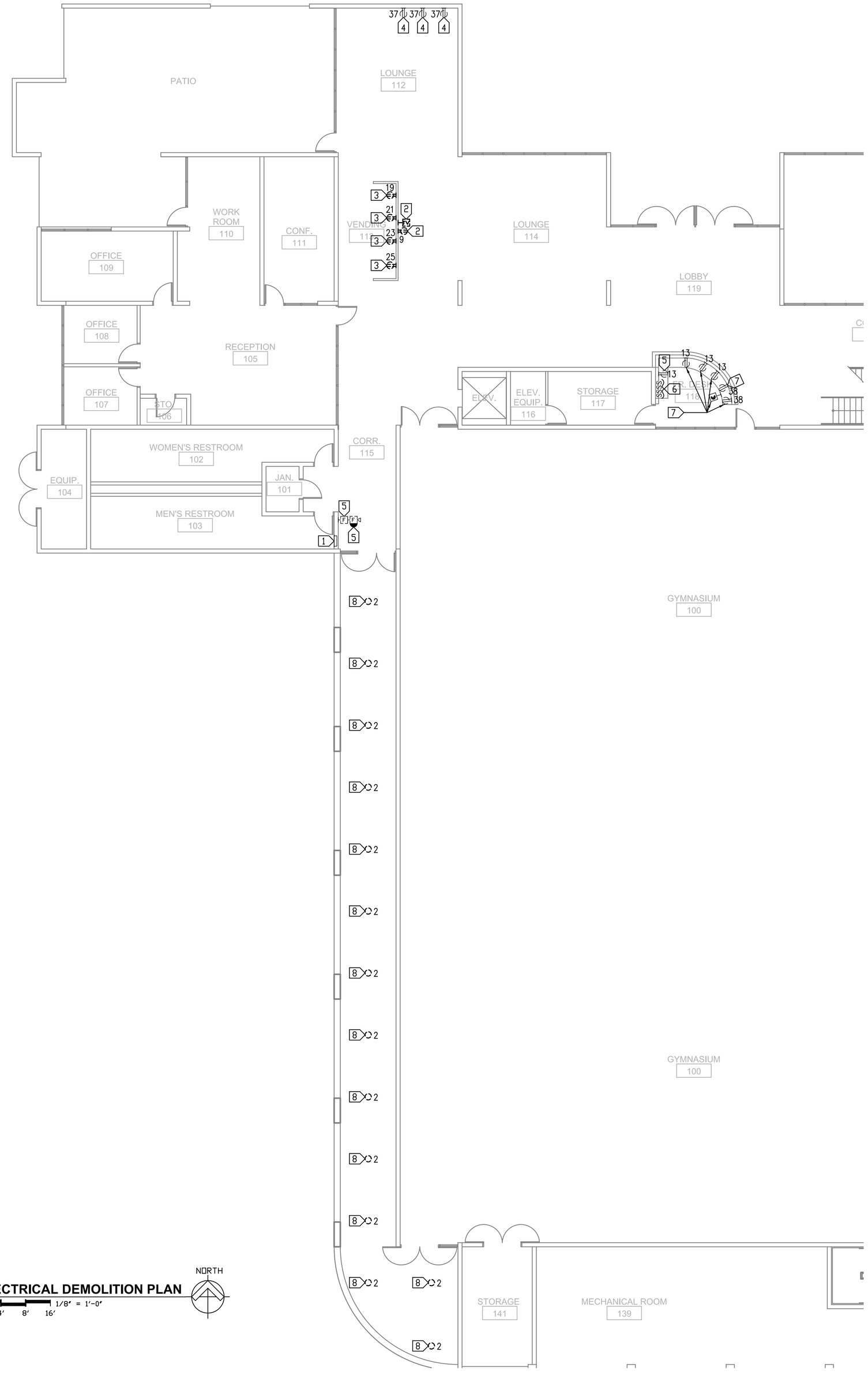

GENERAL NOTES:

1. MAINTAIN ALL NEC REQUIRED WORKING CLEARANCES FOR ALL ELECTRICAL EQUIPMENT.
2. COORDINATE WITH OWNER FOR DEVICES, FIXTURES, ETC. TO BE RETURNED TO OWNER.

KEYED NOTES:

1. (E) PANEL 'L4' SHALL REMAIN.
2. (E) RECEPT/DEVICE SHALL BE RELOCATED. SEE POWER PLAN – NORTH, SHEET E3.1 FOR ADDITIONAL INFORMATION.
3. (E) RECEPT SHALL BE REMOVED.
4. (E) RECEPT SHALL BE REPLACED WITH (N) GFI TYPE RECEPT AND RECIRCUITED. SEE POWER PLAN, SHEET E3.1 FOR ADDITIONAL INFORMATION.
5. (E) RECEPTACLE/DEVICE SHALL REMAIN.
6. (E) CONTROL SWITCHES SHALL REMAIN.
7. (E) RECEPT/DEVICE SHALL BE REMOVED FOR DEMOLITION OF (E) DESK AND REINSTALLED IN (N) DESK. SEE POWER PLAN, SHEET E3.1 FOR ADDITIONAL INFORMATION.
8. (E) FIXTURE SHALL BE REMOVED.

1 **ELECTRICAL DEMOLITION PLAN**
1/8" = 1'-0"
0 2' 4' 8' 16'

NORTH

GRESHAM BEACH ARCHITECTS INC.
177 NORTH CHURCH AVENUE
SUITE 755
TUCSON, ARIZONA 85701
TEL. 520.882.0698
FAX. 520.882.0989

50% CONSTRUCTION DOCUMENTS NOT FOR CONSTRUCTION

CITY OF TUCSON
FACILITIES DESIGN & MANAGEMENT DIVISION

EL PUEBLO ACTIVITY CENTER

5100 S. MISSIONDALE RD.
TUCSON, AZ

REVISIONS

Number	Date	By

Designed	MJ/EG
Drawn	LR
Checked	PB
Date	15 SEP 08
Job Number	27010.00

ELECTRICAL DEMOLITION PLAN

E1.1

BOWDEN ENGINEERING, INC.
ELECTRICAL CONSULTING ENGINEERS
7337 E. Tanque Verde Road
Tucson, Arizona 85715
Voice (520)326-8020
Fax (520)326-8013
Job Number: 0814

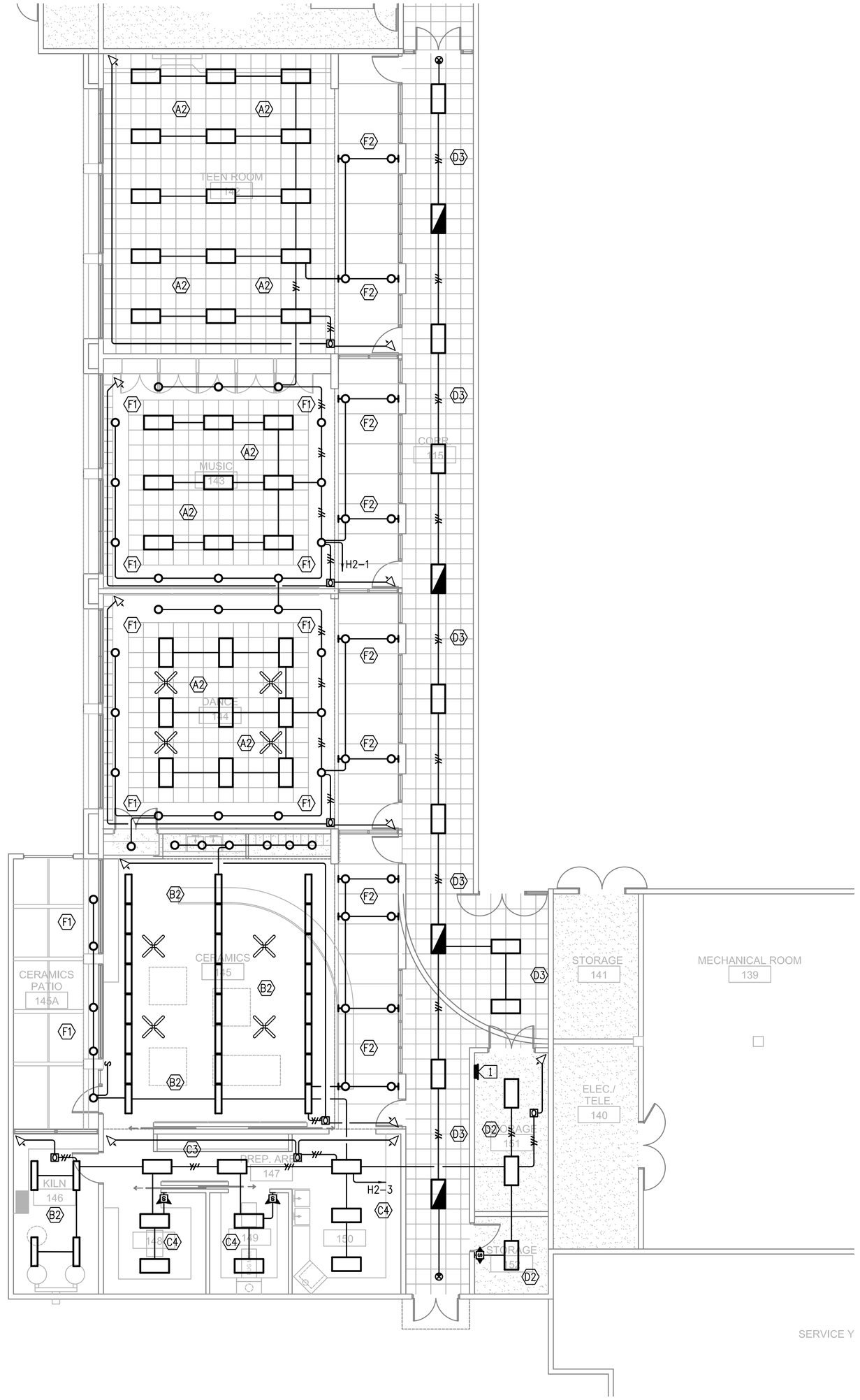

1 **LIGHTING PLAN**

0 2' 4' 8' 16'

1/8" = 1'-0"

NORTH

GENERAL NOTES:

1. COORDINATE ALL MECHANICAL EQUIPMENT LOCATIONS WITH MECHANICAL CONTRACTOR PRIOR TO ROUGH-IN.
2. MAINTAIN ALL NEC REQUIRED WORKING CLEARANCES FOR ALL ELECTRICAL EQUIPMENT.
3. ALL LOW VOLTAGE WIRING IN OPEN STRUCTURE AREAS SHALL BE CONCEALED IN CONDUIT.

KEYED NOTE:

1. PANEL 'H2'.

OCCUPANCY SENSOR LEGEND

- WALL MOUNT DUAL TECHNOLOGY WALL SWITCH SENSOR. WATT STOPPER SERIES #DW-100 OR APPROVED EQUAL. SEE DETAIL, SHEET E5.1 FOR ADDITIONAL INFORMATION.
- WALL MOUNT PASSIVE INFRARED WALL SWITCH SENSOR. WATT STOPPER SERIES #PW-100 OR APPROVED EQUAL. SEE DETAIL, SHEET E5.1 FOR ADDITIONAL INFORMATION.
- CEILING MOUNT DUAL TECHNOLOGY SENSOR. WATT STOPPER SERIES #DT-300 OR APPROVED EQUAL. SEE DETAIL, SHEET E5.1 FOR ADDITIONAL INFORMATION.
- CEILING/WALL MOUNT DUAL TECHNOLOGY SENSOR. WATT STOPPER DT-200 OR APPROVED EQUAL. SEE DETAIL, SHEET E5.1 FOR ADDITIONAL INFORMATION.
- CEILING MOUNT ULTRASONIC HALLWAY SENSOR. WATT STOPPER SERIES #WT-2250 OR APPROVED EQUAL. SEE DETAIL, SHEET E5.1 FOR ADDITIONAL INFORMATION.
- POWER SUPPLY. WATT STOPPER SERIES #BZ100 OR EQUAL. SEE DETAIL, SHEET E5.1 FOR ADDITIONAL INFORMATION.

GRESHAM BEACH
ARCHITECTS INC.
177 NORTH CHURCH AVENUE
SUITE 755
TUCSON, ARIZONA 85701
TEL.520.882.0698
FAX.520.882.0989

50% CONSTRUCTION DOCUMENTS NOT FOR CONSTRUCTION

CITY OF TUCSON
FACILITIES DESIGN & MANAGEMENT DIVISION

EL PUEBLO ACTIVITY CENTER

5100 S. MISSIONDALE RD.
TUCSON, AZ

REVISIONS

Number	Date	By

Designed	MJ/EG
Drawn	LR
Checked	PB
Date	15 SEP 08
Job Number	27010.00

LIGHTING PLAN

E2.1

OF

BOWDEN ENGINEERING, INC.
ELECTRICAL CONSULTING ENGINEERS
7337 E. Tanque Verde Road
Tucson, Arizona 85715
Voice (520)326-8020
Fax (520)326-8013
Job Number: 0814

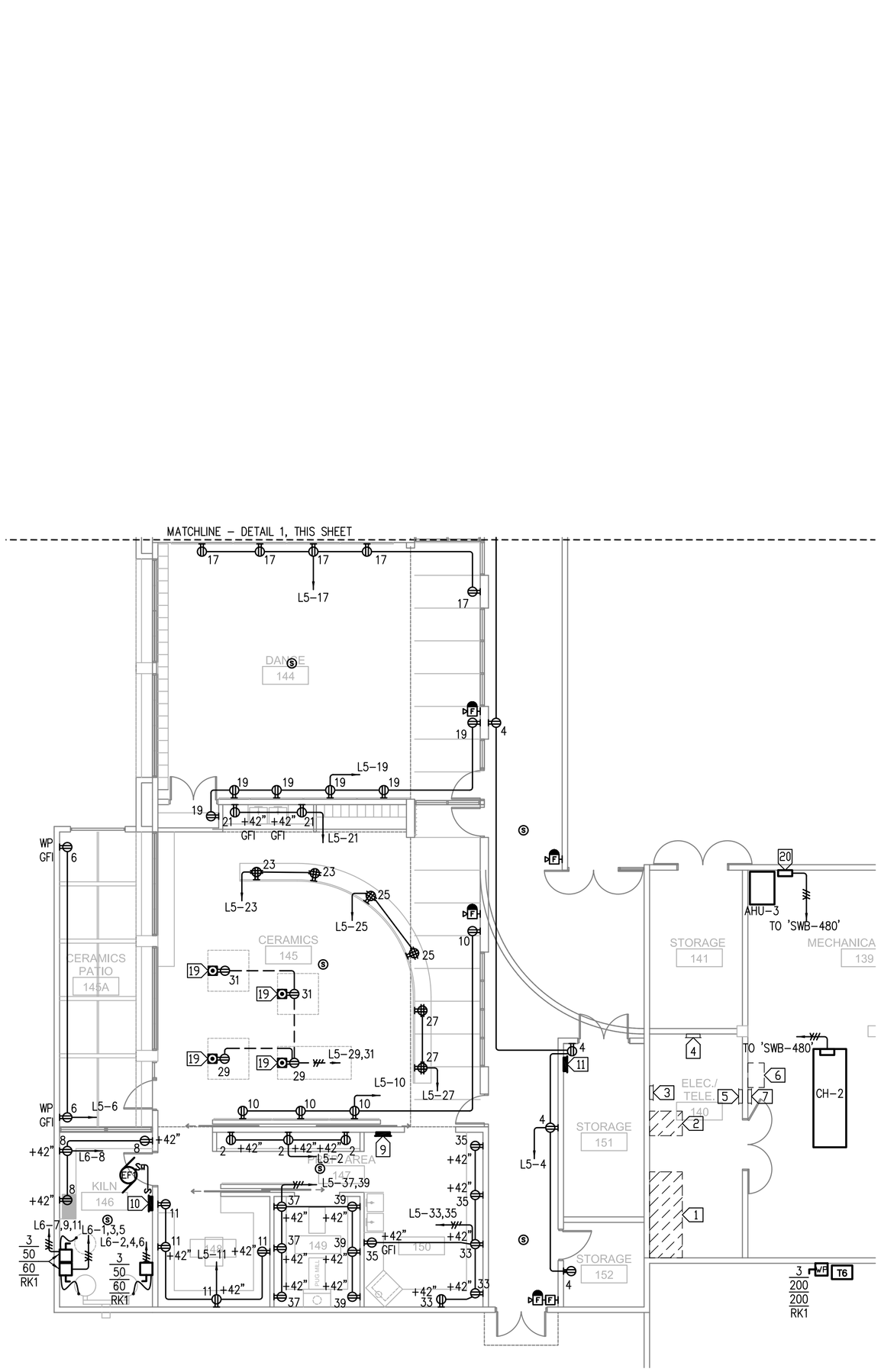

2 **POWER AND SPECIAL SYSTEMS PLAN - SOUTH**

1/8" = 1'-0"

0 2' 4' 8' 16'

NORTH

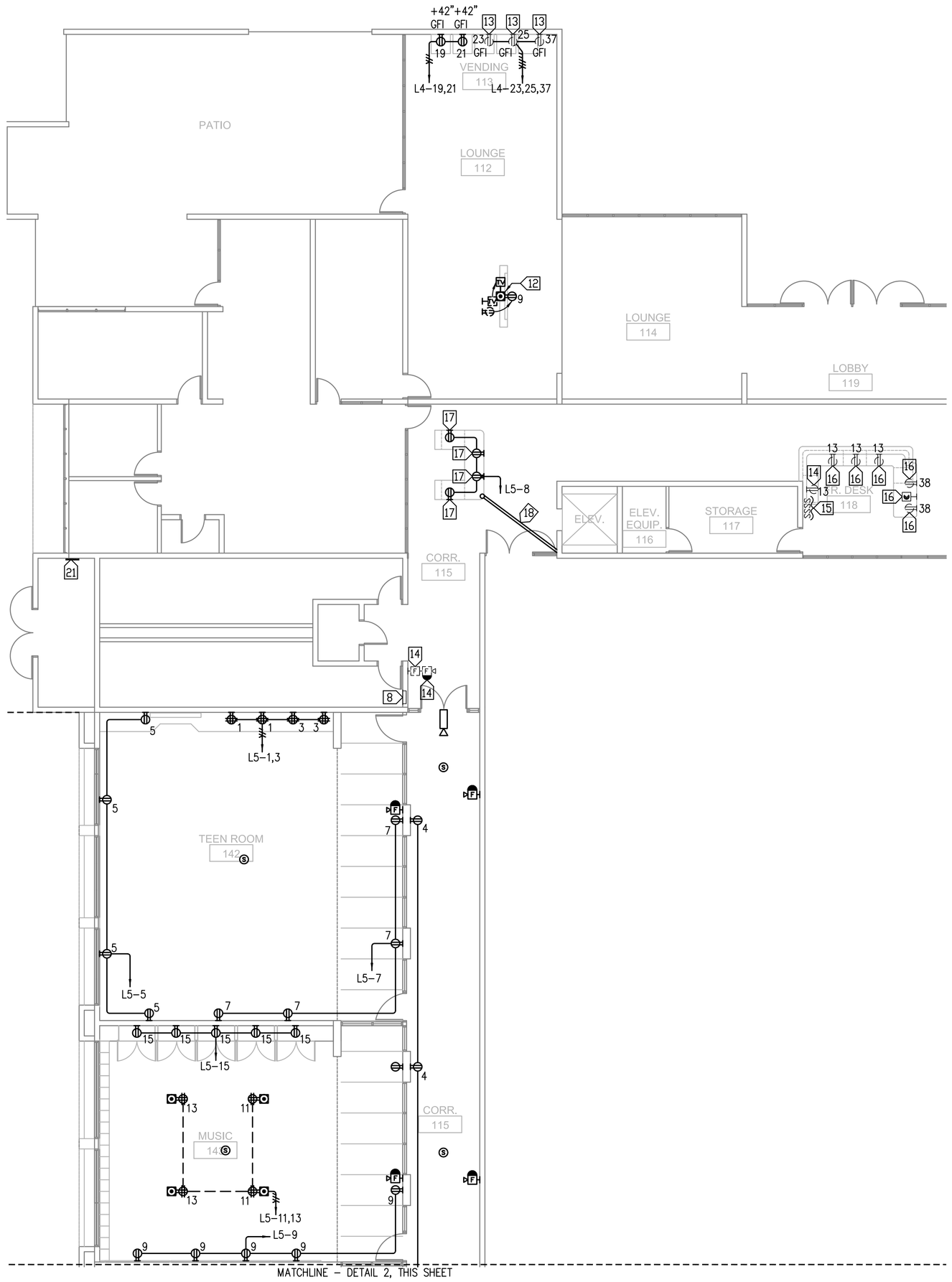

1 **POWER AND SPECIAL SYSTEMS PLAN - NORTH**

1/8" = 1'-0"

0 2' 4' 8' 16'

NORTH

GENERAL NOTES:

1. COORDINATE ALL MECHANICAL EQUIPMENT LOCATIONS WITH MECHANICAL CONTRACTOR PRIOR TO ROUGH-IN.
2. MAINTAIN ALL NEC REQUIRED WORKING CLEARANCES FOR ALL ELECTRICAL EQUIPMENT.
3. WHERE POSSIBLE, CONCEAL ALL CONDUIT IN WALLS. WHERE EXISTING CONDITIONS PROHIBIT CONCEALING CONDUIT, CONTRACTOR SHALL SURFACE MOUNT CONDUIT. PAINT ALL CONDUIT AND SUPPORTS TO MATCH ADJACENT WALL.

KEYED NOTES:

1. (E) SWITCHBOARD 'SWB-480'.
2. (E) SWITCHBOARD 'SWB-208'.
3. (E) PANEL 'L1'.
4. (E) PANEL 'H1'.
5. (E) PANEL 'H-EM'.
6. (E) MCC.
7. (E) PANEL HVAC.
8. (E) PANEL 'L4'.
9. (N) PANEL 'L5'.
10. (N) PANEL 'L6'.
11. (N) PANEL 'H2'.
12. (N) FLOORBOX WITH (E) DEVICES RELOCATED AS INDICATED. SAW CUT AS REQUIRED TO EXTEND CONDUIT AND CONDUCTORS TO NEW LOCATION. FLOORBOX SHALL HAVE POWER AND SIGNAL COMPARTMENTS WITH DIVIDER PER NEC REQUIREMENTS. PATCH TO (E) CONDITIONS.
13. (N) RECEPT IN (E) LOCATION. RECIRCUIT AS INDICATED.
14. (E) RECEPTACLE/DEVICE.
15. (E) CONTROL SWITCHES.
16. (E) RECEPT/DEVICE WAS REMOVED FROM (E) DESK. INSTALL IN (N) DESK AND CONNECT TO (E) CIRCUIT AS INDICATED. EXTEND ALL CONDUIT AND CONDUCTORS AS REQUIRED. COORDINATE MOUNTING AND ROUTING WITH DESK MANUFACTURER.
17. (N) RECEPT MOUNTED IN DESK. COORDINATE MOUNTING AND ROUTING WITH DESK MANUFACTURER.
18. SAWCUT (E) CONCRETE AS REQUIRED. PATCH TO (E) CONDITIONS.
19. PROVIDE FLOOR BOX WITH DEVICES INDICATED. COORDINATE EXACT LOCATION AND FLOOR TYPE WITH ARCHITECT.
20. VFD PROVIDED WITH UNIT.
21. GROUNDING BAR PROVIDED BY TELECOMMUNICATIONS CONTRACTOR. ELECTRICAL CONTRACTOR SHALL PROVIDE #3/0 GRD TO SES GROUND BUS BAR.

GRESHAM BEACH ARCHITECTS INC.
177 NORTH CHURCH AVENUE
SUITE 755
TUCSON, ARIZONA 85701
TEL. 520.882.0698
FAX. 520.882.0989

50% CONSTRUCTION DOCUMENTS NOT FOR CONSTRUCTION

CITY OF TUCSON
FACILITIES DESIGN & MANAGEMENT DIVISION

EL PUEBLO ACTIVITY CENTER

5100 S. MISSIONDALE RD.
TUCSON, AZ

REVISIONS

Number	Date	By

Designed	MJ/EG
Drawn	LR
Checked	PB
Date	15 SEP 08
Job Number	27010.00

POWER AND SPECIAL SYSTEMS PLAN

E3.1

BOWDEN ENGINEERING, INC.
ELECTRICAL CONSULTING ENGINEERS
7337 E. Tanque Verde Road
Tucson, Arizona 85715
Voice (520)326-8020
Fax (520)326-8013
Job Number: 08114

NEW PANEL H2 SCHEDULE

PANEL H2 | 277 / 480 VOLTS | 3 PHASE | 4 WIRE | AIC RATING 35,000
NEMA 1 | 100 AMP MAIN | X LUGS | BKR | MOUNTING | X FLUSH | SURFACE

CKT	DESCRIPTION	BKR	WIRE-GRD	COND.	A	B	C	COND.	WIRE-GRD	BKR	DESCRIPTION	CKT
1	LTG TEEN/MUSIC/DANCE	20/1	12	3/4"	3.6					20/1	SPARE	2
3	LTG CERAMICS/PREP/STOR	20/1	12	3/4"		3.4				20/1	SPARE	4
5	SPARE	20/1								20/1	SPARE	6
7	SPARE	20/1								20/1	SPARE	8
9	SPARE	20/1								20/1	SPARE	10
11	SPARE	20/1								20/1	SPARE	12
13	SPARE	20/1								20/1	SPARE	14
15	SPARE	20/1								20/1	SPARE	16
17	SPARE	25/1								20/1	SPARE	18
19	SPARE	20/1								20/1	SPARE	20
21	SPARE	20/1								20/1	SPARE	22
23	SPARE	20/1								20/1	SPARE	24
25	SPARE	20/1								20/1	SPARE	26
27	SPARE	20/1								20/1	SPARE	28
29	SPARE	20/1								20/1	SPARE	30
31	SPARE	20/1								20/1	SPARE	32
33	SPARE	20/1								20/1	SPARE	34
35	SPARE	20/1								20/1	SPARE	36
37	SPARE	20/1								20/1	SPARE	38
39	SPARE	20/1								20/1	SPARE	40
41	SPARE	20/1								20/1	SPARE	42

		A	B	C
1	CONTINUOUS LOAD	0.0	0.0	0.0
2	LARGEST MOTOR	0.0	0.0	0.0
	NON-CONTINUOUS LOAD	3.6	3.4	0.0
	25% OF CONTINUOUS	0.0	0.0	0.0
	25% OF LARGEST MOTOR	0.0	0.0	0.0
	TOTAL KVA	3.6	3.4	0.0
	TOTAL AMPERES	13	12	0

7.0 KVA / 1.732(480) = 8 AMPS

NOTE: WIRE SIZE APPLIES TO PHASE, NEUTRAL AND GROUNDING CONDUCTORS UNLESS OTHERWISE NOTED.

NEW PANEL L6 SCHEDULE

PANEL L6 | 120 / 208 VOLTS | 3 PHASE | 4 WIRE | AIC RATING 10,000
NEMA 1 | 225 AMP MAIN | X LUGS | BKR | MOUNTING | X FLUSH | SURFACE

CKT	DESCRIPTION	BKR	WIRE-GRD	COND.	A	B	C	COND.	WIRE-GRD	BKR	DESCRIPTION	CKT
1					4.8							2
					4.8							
3	KILN	50/3	6-10	1"		4.8		1"	6-10	50/3	KILN	4
						4.8						
5							4.8					6
							4.8					
7					4.8			3/4"	12	20/1	REC KILN RM	8
					0.5							
9	KILN	50/3	6-10	1"		4.8				20/1	SPARE	10
11							4.8			20/1	SPARE	12
13	SPARE	20/1								20/1	SPARE	14
15	SPARE	20/1								20/1	SPARE	16
17	SPARE	25/1								20/1	SPARE	18
19	SPARE	20/1								20/1	SPARE	20
21	SPARE	20/1								20/1	SPARE	22
23	SPARE	20/1								20/1	SPARE	24
25	SPARE	20/1								20/1	SPARE	26
27	SPARE	20/1								20/1	SPARE	28
29	SPARE	20/1								20/1	SPARE	30

		A	B	C
1	CONTINUOUS LOAD	0.0	0.0	0.0
2	LARGEST MOTOR	0.0	0.0	0.0
	NON-CONTINUOUS LOAD	14.9	14.4	14.4
	25% OF CONTINUOUS	0.0	0.0	0.0
	25% OF LARGEST MOTOR	0.0	0.0	0.0
	TOTAL KVA	14.9	14.4	14.4
	TOTAL AMPERES	125	120	120

43.7 KVA / 1.732(208) = 121 AMPS

NOTE: WIRE SIZE APPLIES TO PHASE, NEUTRAL AND GROUNDING CONDUCTORS UNLESS OTHERWISE NOTED.

NEW PANEL L5 SCHEDULE

PANEL L5 | 120 / 208 VOLTS | 3 PHASE | 4 WIRE | AIC RATING 10,000
NEMA 1 | 225 AMP MAIN | X LUGS | BKR | MOUNTING | X FLUSH | SURFACE

CKT	DESCRIPTION	BKR	WIRE-GRD	COND.	A	B	C	COND.	WIRE-GRD	BKR	DESCRIPTION	CKT
1	REC TEEN RM COMPS	20/1	12	3/4"	0.7			3/4"	12	20/1	REC PREP	2
					0.5							
3	REC TEEN RM COMPS	20/1	12	3/4"		0.7		3/4"	12	20/1	REC CORR	4
						1.1						
5	REC TEEN RM	20/1	12	3/4"			0.7	3/4"	12	20/1	REC CERAMICS PATIO	6
							0.4					
7	REC TEEN RM	20/1	12	3/4"	0.7			3/4"	12	20/1	REC LOBBY COUNTER	8
					0.7							
9	REC MUSIC RM	20/1	12	3/4"		1.1		3/4"	12	20/1	REC CERAMICS	10
						0.7						
11	REC MUSIC RM	20/1	12	3/4"			0.7			20/1	SPARE	12
13	REC MUSIC RM	20/1	12	3/4"	0.7					20/1	SPARE	14
15	REC MUSIC RM	20/1	12	3/4"		1.1				20/1	SPARE	16
17	REC DANCE RM	25/1	12	3/4"			0.9			20/1	SPARE	18
19	REC DANCE RM	20/1	12	3/4"	1.1					20/1	SPARE	20
21	REC CERAMICS	20/1	12	3/4"		0.4				20/1	SPARE	22
23	REC CERAMICS	20/1	12	3/4"			1.2			20/1	SPARE	24
25	REC CERAMICS	20/1	12	3/4"	1.2					20/1	SPARE	26
27	REC CERAMICS	20/1	12	3/4"		1.2				20/1	SPARE	28
29	REC CERAMICS	20/1	12	3/4"			1.2			20/1	SPARE	30
31	REC CERAMICS	20/1	12	3/4"	1.2					20/1	SPARE	32
33	REC PREP	20/1	12	3/4"		0.5				20/1	SPARE	34
35	REC PREP	20/1	12	3/4"			0.5			20/1	SPARE	36
37	REC PREP	20/1	12	3/4"	0.5					20/1	SPARE	38
39	REC PREP	20/1	12	3/4"		0.5				20/1	SPARE	40
41	REC PREP	20/1	12	3/4"			0.7			20/1	SPARE	42

		A	B	C
1	CONTINUOUS LOAD	0.0	0.0	0.0
2	LARGEST MOTOR	0.0	0.0	0.0
	NON-CONTINUOUS LOAD	7.4	7.3	6.4
	25% OF CONTINUOUS	0.0	0.0	0.0
	25% OF LARGEST MOTOR	0.0	0.0	0.0
	TOTAL KVA	7.4	7.3	6.4
	TOTAL AMPERES	62	61	53

21.1 KVA / 1.732(208) = 59 AMPS

NOTE: WIRE SIZE APPLIES TO PHASE, NEUTRAL AND GROUNDING CONDUCTORS UNLESS OTHERWISE NOTED.

EXS PANEL L4 SCHEDULE

PANEL L4 | 120 / 208 VOLTS | 3 PHASE | 4 WIRE | AIC RATING EXS
NEMA 1 | 225 AMP MAIN | X LUGS | BKR | MOUNTING | X FLUSH | SURFACE

CKT	DESCRIPTION	BKR	WIRE-GRD	COND.	A	B	C	COND.	WIRE-GRD	BKR	DESCRIPTION	CKT
1	REC MENS RR	20/1	(E)	(E)	0.5			(E)	(E)	25/2	HAND DRYER	2
					2.3							
3	REC WOMENS RR	20/1	(E)	(E)		0.4					MENS RR	4
						2.3						
5	REC WORK RM	20/1	(E)	(E)			0.7	(E)	(E)	25/2	HAND DRYER	6
							2.3					
7	REC CONF/HALL	20/1	(E)	(E)	1.3						MENS RR	8
					2.3							
9	REC LOUNGE	20/1	(E)	(E)		1.3		(E)	(E)	20/1	REC RECEPTION	10
						0.9						
11	REC ELEVATOR	20/1	(E)	(E)			0.4	(E)	(E)	20/1	REC OFFICE	12
							0.9					
13	REC CTRL DESK	20/1	(E)	(E)	0.9			(E)	(E)	20/1	REC OFFICE	14
					0.5							
15	VAV BOXES/EF-2	20/1	(E)	(E)		1.7		(E)	(E)	20/1	REC OFFICE	16
						0.7						
17	HAND DRYER WMNS	25/1	(E)	(E)			2.3	(E)	(E)	20/1	REC PANTRY	18
							0.7					
19	VENDING MACH	20/1	12	3/4"	1.2			(E)	(E)	20/1	REC PANTRY	20
					0.2							
21	VENDING MACH	20/1	12	3/4"		1.2		(E)	(E)	20/1	REC WORK RM	22
						0.5						
23	VENDING MACH	20/1	12	3/4"			1.2	(E)	(E)	20/1	EWC/TDC PHONES	24
							0.6					
25	VENDING MACH	20/1	12	3/4"	1.2			(E)	(E)	20/1	MODULAR FURN	26
					0.7							
27	REC TELEPHONE	20/1	(E)	(E)		0.4		(E)	(E)	20/1	MODULAR FURN	28
						0.7						
29	REC DATA	20/1	(E)	(E)			0.4	(E)	(E)	20/1	COPIER	30
							1.2					
31	INTERCOM	20/1	(E)	(E)	1.0			(E)	(E)	20/1	MODULAR FURN	32
					0.7							
33	INTERCOM	20/1	(E)	(E)		1.0		(E)	(E)	20/1	MODULAR FURN	34
						0.5						
35	CLOCK	20/1	(E)	(E)			0.5	(E)	(E)	20/1	MODULAR FURN	36
							0.5					
37	VENDING MACH	20/1	12	3/4"	1.2			(E)	(E)	20/1	REC CTRL DESK	38
					0.4							
39	WATER HEATER	20/1	(E)	(E)		1.5		(E)	(E)	25/2	HAND DRYER	40
						2.3						
41	WATER HEATER	20/1	(E)	(E)			1.5	(E)	(E)	20/1	WOMENS RM	42
							2.3					

		A	B	C
1	CONTINUOUS LOAD	0.0	0.0	0.0
2	LARGEST MOTOR	0.0	0.0	0.0
	NON-CONTINUOUS LOAD	14.4	15.4	15.5
	25% OF CONTINUOUS	0.0	0.0	0.0
	25% OF LARGEST MOTOR	0.0	0.0	0.0
	TOTAL KVA	14.4	15.4	15.5
	TOTAL AMPERES	120	128	129

45.3 KVA / 1.732(208) = 126 AMPS

NOTE: WIRE SIZE APPLIES TO PHASE, NEUTRAL AND GROUNDING CONDUCTORS UNLESS OTHERWISE NOTED.

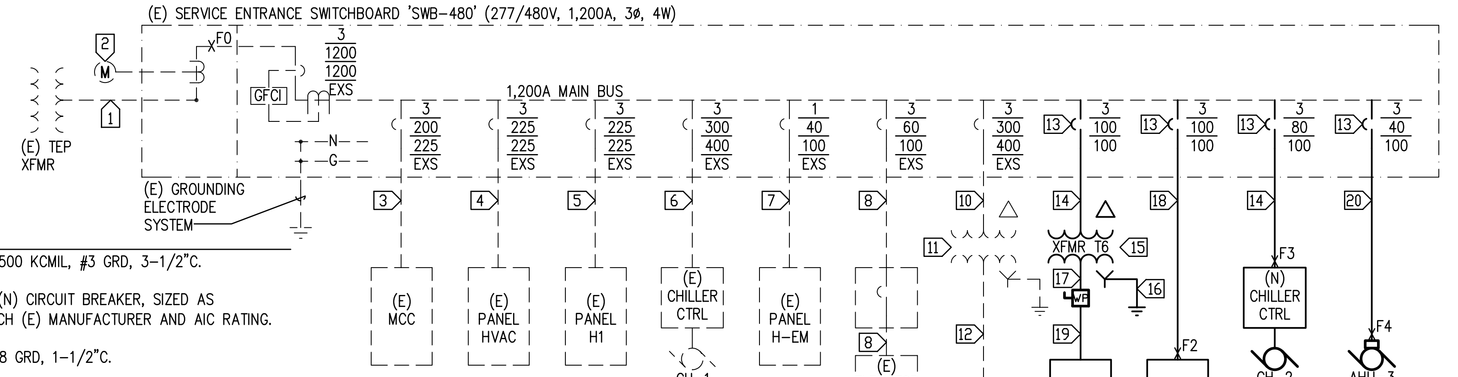

KEYED NOTES:

1. (E) 4 PARALLEL SETS OF (4) #350 KCMIL, 3"C EACH SET.
2. (E) METER SOCKET.
3. (E) (3) #3/0, #6 GRD, 2"C.
4. (E) (3) #4/0, #4 GRD, 2"C.
5. (E) (4) #4/0, #4 GRD, 2-1/2"C.
6. (E) (3) #250 KCMIL, #4 GRD, 2-1/2"C.
7. (E) (2) #8, #10 GRD, 3/4"C.
8. (E) (3) #8, #10 GRD, 3/4"C.
9. (E) SHUNT TRIP CIRCUIT BREAKER.
10. (E) (3) #350 KCMIL, #4 GRD, 3"C.
11. (E) 150 KVA, 480-120/208V, 3ø, 4W TRANSFORMER.
12. (E) (4) #500 KCMIL, #3 GRD, 3-1/2"C.
13. PROVIDE (N) CIRCUIT BREAKER, SIZED AS INDICATED. MATCH (E) MANUFACTURER AND AIC RATING.
14. (3) #2, #8 GRD, 1-1/2"C.
15. 75 KVA, 480-120/208V, 3ø, 4W, 5.2%Z, NEMA 3R, TP1 RATED TRANSFORMER WITH RODENT SCREENS.
16. #4 GRD PER NEC 250.
17. (4) #3/0, #4 GRD, 2"C.
18. (4) #2, #8 GRD, 1-1/2"C.
19. (4) #3/0, #6 GRD, 2"C.
20. (3) #8, #10 GRD, 3/4"C.

FAULT CURRENT ANALYSIS

FAULT POINT	FAULT LOCATION	SOURCE POINT	SOURCE AMPS	CABLE E(Volts)	CABLE NO. SETS	CABLE WIRE SIZE	CABLE MAG. DUCT	CABLE C VALUE	CABLE LENGTH	f	M	Isc	FAULT POINT
F0	(E) 'SWB-480' PER AS BUILTS		35,932									35,932	F0
F1	(N) PANEL H2	F0	35,932	480	1	2 AWG	Y	5,907	20	0.44	0.695	24,970	F1
F2	(N) CHILLER 'CH-2'	F0	35,932	480	1	2 AWG	Y	5,907	25	0.55	0.646	23,201	F2
F3	(N) AIR HANDLER 'AHU-3'	F0	35,932	480	1	8 AWG	Y	1,557	40	3.33	0.231	8,297	F3

Note: The above calculations are based on the "Point to Point" method.

C = Cable Conductance Factor
E = Line to Line Voltage
Vp = Transformer Primary Line to Line Voltage

Vs = Transformer Secondary Line to Line Voltage
Z = Transformer Impedance
Isc = Short circuit current

M = 1 / (1 + f) Isc = Isc x M

Isc = Vp x M x Isc / Vs

Three Phase

f = 1.732 x L x Isc / (C x n x E)

f = I sc x Vp x 1.73 (% Z) / (100000 x kva)

NEW LOAD INDICATED AS BOLD

LOAD CALCS:

(E) 'SWB-208' (400A, 120/208V, 3ø, 4W)

(E) PANEL 'L1' PER AS BUILTS	30.3 kVA
(E) PANEL 'L1' PER AS BUILTS	30.3 kVA
(E) PANEL 'L4'	45.3 kVA
(N) PANEL 'L5'	21.1 kVA
TOTAL	127.0 kVA
127.0 kVA / (208 * 1.732) =	352.5 A

(E) 'SWB-480' (1,200A, 277/480V, 3ø, 4W)

(E) MCC PER AS BUILTS	128.7 kVA
(E) PANEL 'HVAC' PER AS BUILTS	54.0 kVA
(E) PANEL 'H1' PER AS BUILTS	57.7 kVA
(E) CHILLER 'CH-1' PER AS BUILTS	209.4 kVA
(E) PANEL 'H-EM' PER AS BUILTS	4.0 kVA
(E) ELEVATOR PER AS BUILTS	22.4 kVA
(E) 'SWB-208'	127.0 kVA
(N) PANEL 'L6'	38.3 kVA
(N) PANEL 'H2'	7.0 kVA
(N) CHILLER 'CH-2'	49.1 kVA
(N) AIR HANDLER 'AHU-3'	17.5 kVA
TOTAL	715.0 kVA
715.0 kVA / (480 * 1.732) =	860.0 A

1 SINGLE LINE DIAGRAM
N.T.S.

GRESHAM BEACH ARCHITECTS INC.
177 NORTH CHURCH AVENUE
SUITE 755
TUCSON, ARIZONA 85701
TEL. 520.882.0698
FAX. 520.882.0989

50% CONSTRUCTION DOCUMENTS NOT FOR CONSTRUCTION

CITY OF TUCSON
FACILITIES DESIGN & MANAGEMENT DIVISION
EL PUEBLO ACTIVITY CENTER
5100 S. MISSIONDALE RD.
TUCSON, AZ

REVISIONS

Number	Date	By

Designed	MJ/EG
Drawn	LR
Checked	PB
Date	15 SEP 08
Job Number	27010.00

SINGLE LINE DIAGRAM, PANEL SCHEDULES

E4.1

BOWDEN ENGINEERING, INC.
ELECTRICAL CONSULTING ENGINEERS
7337 E. Tanque Verde Road
Tucson, Arizona 85715
Voice (520)326-8020
Fax (520)326-8013
Job Number: 0814