TEP Tucson Substation Board of Adjustment Variance Application

3 Copies of Project Site Plan

LEGEND

- FOUND SURVEY MONUMENT AS NOTED
- BOUNDARY OF PARCEL
- EXISTING R/W
- EXISTING PROPERTY LINE
- CENTERLINE ROAD
- EXISTING CONCRETE CURB/EDGE OF PAVEMENT
- EXISTING LIGHT POLE
- EXISTING DEADEND FOUNDATION
- OHE — EXISTING OVERHEAD ELECTRIC AND POLE
- S — EXISTING SANITARY SEWER AND MANHOLE
- W — EXISTING WATER LINE
- G — EXISTING GAS LINE
- 2475 — EXISTING CONTOUR AND ELEVATION
- EXISTING FENCE AS NOTED
- PROPOSED CMU SCREEN WALL (HEIGHT 10'–10" MAX ABOVE F.G.)
- PROPOSED AGGREGATE BASE
- PROPOSED TRENCH DRAIN AS NOTED
- PROPOSED RIPRAP, SIZE AS NOTED
- PROPOSED CONCRETE
- .39.27 — PROPOSED SPOT ELEVATION
- –1.6% — PROPOSED SLOPE AND DIRECTION
- 1 / C08 — INDICATES DETAIL NUMBER / INDICATES SHEET NUMBER
- PROPOSED GRADING LIMITS
- PROPOSED MAINTENANCE VEHICLE ACCESS AREA (SEE SITE MAP ON THIS SHEET)

BASIS OF BEARINGS

THE BASIS OF BEARINGS IS TRUE GRID NORTH AS DEFINED BY NAD83(HARN92). THE BEARING BEING N89°06'59"E, FROM A 3/ 8" STEM IN CASING AT THE INTERSECTION OF 4TH STREET AND 11TH AVENUE ALONG THE MONUMENT LINE TO A 3/ 8" STEM IN CASING AT THE INTERSECTION OF 4TH STREET AND 10TH AVENUE.

BASIS OF ELEVATIONS

BASIS OF ELEVATIONS IS PT. 1 – 1/2"STEM WITH PUNCH IN CASING, DOWN 0.60' AT CL CL MAIN & 5TH ST. BEING THE PIMA COUNTY DOT – CITY OF TUCSON DOT GEODETIC CONTROL POINT, TOWNSHIP 14S, RANGE 13E, INDEX CODE G21 WITH THE ELEVATION BEING 2352.61 FT. (NAVD88)

ENGINEERS ESTIMATED EARTHWORK QUANTITIES

CUT = 709 C.Y.
FILL = 76 C.Y.

TOTAL= 633 C.Y. EXPORT

ASSUMPTIONS:

20% SHRINK ON FILL AREAS

EARTHWORK QUANTITIES SHOWN ARE FOR ENGINEERS ESTIMATE & PERMITTING ONLY. ALL CONTRACTORS SHALL CONDUCT AND BASE THEIR BID ON THEIR OWN EARTHWORK ANALYSIS.

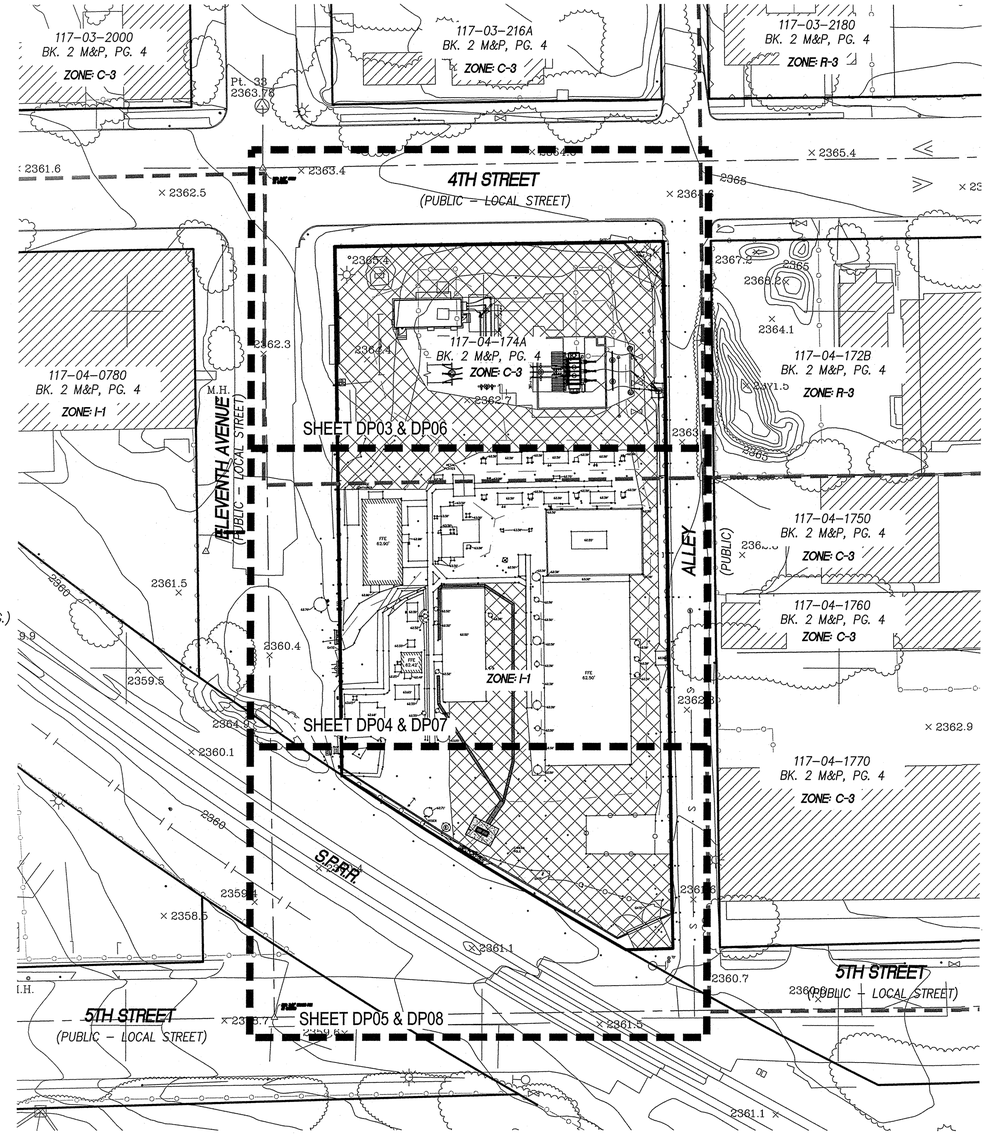

ZONING AND SITE MAP

0' 40' 80' 120'

SCALE: 1"=40'

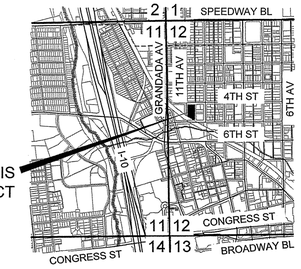

A PORTION OF SECTION 12,
T–14–S, R–13–E, G&SRM,
CITY OF TUCSON, PIMA COUNTY, ARIZONA
SCALE 3"=1 MILE

CIVIL ENGINEER

ENGINEERING & ENVIRONMENTAL CONSULTANTS, INC.
555 E. RIVER ROAD, SUITE 301
TUCSON, ARIZONA 85704
ATTN.: BRUCE WILSON, P.E.
TEL: (520) 321–4625
FAX: (520) 321–0333
EMAIL: bwilson@eeccorp.com

OWNER/DEVELOPER

TUCSON ELECTRIC POWER COMPANY
MAIL STOP HQW603
PO BOX 711
TUCSON, ARIZONA 85702
TEL: (520) 449–4309
FAX: (520) 545–1419
CONTACT: MIRANDA JACKSON
EMAIL: mjackson@tep.com

SHEET INDEX

COT SHT NO.	TEP SHT NO.	DESCRIPTION	DWG NO.
1 OF 12	DP01	COVER SHEET	0070–000–00–0019
2 OF 12	DP02	SITE/GRADING NOTES	0070–138–05–0002
3 OF 12	DP03	SITE PLAN/GRADING PLAN	0070–138–05–0003
4 OF 12	DP04	SITE PLAN/GRADING PLAN	0070–138–05–0004
5 OF 12	DP05	SITE PLAN/GRADING PLAN	0070–138–05–0005
6 OF 12	DP06	HORIZONTAL CONTROL PLAN	0070–138–05–0006
7 OF 12	DP07	HORIZONTAL CONTROL PLAN	0070–138–05–0007
8 OF 12	DP08	HORIZONTAL CONTROL PLAN	0070–138–05–0008
9 OF 12	DP09	COORDINATE POINT TABLES	0070–138–05–0009
10 OF 12	DP10	DETAIL SHEET	0070–138–05–0010
11 OF 12	DP11	DETAIL SHEET	0070–138–05–0011
12 OF 12	DP12	DETAIL SHEET	0070–138–05–0012

DEVELOPMENT PACKAGE
FOR
TEP TUCSON SUBSTATION

A PORTION OF BLOCK 54 OF CITY OF TUCSON,
BK. 2 M&P, PG. 4
BEING A PORTION OF SECTION 12, T14S, R13E, G&SRM,
CITY OF TUCSON, PIMA COUNTY, ARIZONA

COT ADMINISTRATIVE ADDRESS:
247 W. 4TH STREET
TUCSON, ARIZONA 85705

DP19–0201

AUGUST 2019
EEC JOB NO 204014.135

NO.	DATE	REVISION	BY	CH	APPR

Call at least two full working days before you begin excavation.
ARIZONA 811
Arizona Blue Stake, Inc.
Dial 8-1-1 or 1-800-STAKE-IT (782-5348)
In Maricopa County: (602) 263-1100

Registered Professional Engineer (Civil) CERTIFICATE NO. 10011 EDWIN BRUCE WILSON Date Signed 10-30-19 ARIZONA, U.S.A.
EXPIRES 12/31/2019

eec
Engineering and Environmental Consultants, Inc.
555 E. River Road, Suite 301 | Tucson, Arizona 85704
Tel 520.321.4625 | Fax 520.321.0333
civil engineering • land development
surveying • environmental services
staking • flood control and drainage
transportation

REVISIONS

DATE	ENG	TECH	REV
JULY 2019	M. JACKSON	D. GEERLIGS	00

DESCRIPTION:
JOB: 9788.00
WO: 6245721
TUCSON SUBSTATION

SCALE FACTOR: DATE
CONTRACTED ENG: DATE
ENGINEERING TECH: DATE
PROJECT ENGINEER: DATE
ENGINEER APPROVAL: DATE

AUTOCADD

Tucson Electric Power Company
TUCSON, ARIZONA

TITLE: SITE GRADING COVER SHEET TUCSON SUBSTATION

TRSQ T14S,R13E,S12,NE
REF # N/A
DWG # 0070-000-00-0019
REV 00 SHEET DP01

1 OF 12

N:\204014.135 TEP Tucson Substation\950 CADD\955 DWG\DP\0070-000-00-0019.dwg Plotted: Oct 29, 2019 - 2:57pm btenor

GENERAL SITE NOTES

1. EXISTING ZONING IS C–3 (0.56 ACRES) AND I–1 (0.94 ACRES) AND SHALL REMAIN.
2. THE GROSS AREA OF THE SITE IS 65,450 SF / 1.50 ACRES.
3. THE EXISTING USE OF THE PROPERTY IS UTILITIES USE GROUP: DISTRIBUTION SYSTEM, AND SHALL REMAIN. IT IS PERMITTED PER SECTION 4.8.6 (C–3, USE SPECIFIC STANDARD: 4.9.11.A.1, .5, & .9), AND SECTION 4.8.7 (I–1, USE SPECIFIC STANDARD: 4.9.11.A.1, .2, & .4) OF THE TUCSON UNIFIED DEVELOPMENT CODE (UDC).
4. THE DEVELOPER, ANY SUCCESSORS AND ASSIGNS, WILL HOLD THE CITY OF TUCSON, ITS OFFICERS, EMPLOYEES, AND AGENTS HARMLESS FROM ANY AND ALL CLAIMS FOR DAMAGES RELATED TO THE USE OF THIS DEVELOPMENT AS SHOWN HEREON, NOW AND IN THE FUTURE, BY REASON OF FLOODING, FLOWAGE, EROSION, OR DAMAGE CAUSED BY WATER, WHETHER SURFACE FLOOD OR RAINFALL."
5. DRAINAGE WILL REMAIN IN ITS NATURAL STATE AND WILL NOT BE ALTERED, DISTURBED, OR OBSTRUCTED OTHER THAN AS SHOWN ON THIS SITE PLAN.
6. TOTAL MILES OF NEW PUBLIC STREETS IS 0.
   TOTAL MILES OF NEW PRIVATE STREETS IS 0.
7. NO STRUCTURE OR VEGETATION SHALL BE LOCATED OR MAINTAINED SO AS TO INTERFERE WITH THE SIGHT VISIBILITY TRIANGLES IN ACCORDANCE WITH DEVELOPMENT STANDARD 3–01.0.
8. ANY RELOCATION OR MODIFICATION OF EXISTING UTILITIES AND/OR PUBLIC IMPROVEMENTS NECESSITATED BY THE PROPOSED DEVELOPMENT WILL BE AT NO EXPENSE TO THE PUBLIC.
9. THE FACILITY IS AN UNMANNED ELECTRIC SUBSTATION. NO PEDESTRIAN OR BICYCLE ACCESS IS ALLOWED. NO WALKWAYS OR BICYCLE RACKS ARE PROPOSED OR REQUIRED AND NO VEHICLE PARKING SPACES OR OFF–STREET LOADING SPACES ARE REQUIRED OR PROVIDED.
10. PROPOSED BUILDING FLOOR AREA = 532 SF (UNMANNED CONTROL SHELTER).
11. PROPOSED MAINTENANCE VEHICLE ACCESS AREA = 29,100 SF, 44 PERCENT OF SITE.
12. THE EASTERN PIMA COUNTY TRAILS SYSTEM MASTER PLAN DOES NOT SHOW ANY TRAILS ON OR ADJACENT TO THE DEVELOPMENT SITE.
13. THE AREA OF DISTURBANCE FOR THIS PROJECT IS: 43,413 SF / 0.99 ACRES.
14. A BOARD OF ADJUSTMENTS VARIANCE FOR THE SCREEN WALL SETBACKS WAS APPROVED ON _____ __, 2019. CASE NUMBER _____. CONDITIONS OF APPROVAL:

EXISTING UTILITY NOTE

EXISTING UTILITY LOCATIONS, AS SHOWN ON THE PLANS, WERE COMPILED FROM UTILITY COMPANY BASE MAPS, RECORD PLANS AND ABOVE GROUND FEATURES. HOWEVER, UTILITY LOCATIONS ARE NOT TO BE CONSIDERED EXACT OR COMPLETE. PRIOR TO COMMENCING WORK, THE CONTRACTOR SHALL VERIFY THE LOCATION OF ALL WITH THE APPROPRIATE ORGANIZATION AND, IF NECESSARY, POTHOLE ANY AND ALL UTILITY LOCATIONS IN QUESTION. THE CONTRACTOR SHALL PROTECT ALL EXISTING UTILITIES "IN–PLACE" UNLESS OTHERWISE NOTED ON THE CONSTRUCTION DOCUMENTS.

GENERAL GRADING AND PAVING NOTES

1. ALL CONSTRUCTION AND TEST METHODS SHALL BE IN CONFORMANCE WITH PIMA ASSOCIATION OF GOVERNMENTS (PAG) STANDARD DETAILS AND SPECIFICATIONS FOR PUBLIC IMPROVEMENTS (SSPI), 2015 EDITION, EXCEPT AS MODIFIED HEREBY.
2. ALL GRADING SHALL BE IN CONFORMANCE TUCSON TECHNICAL STANDARDS MANUAL (TSM) SECTION 2: EXCAVATION AND GRADING.
3. EXCAVATION AND BACKFILL FOR STRUCTURES SHALL CONFORM TO PAG SSPI, SECTION 203–5 OR PER THE APPROVED GEOTECHNICAL REPORT, WHICHEVER IS MORE RESTRICTIVE.
4. ALL CONCRETE SHALL CONFORM TO PAG SSPI, SECTION 1006, CLASS S, 5,000 PSI COMPRESSIVE STRENGTH AT 28 DAYS, UNLESS OTHERWISE SPECIFIED.
5. A STAMPED SET OF APPROVED PLANS SHALL BE KEPT IN AN EASILY ACCESSIBLE LOCATION ON THE JOB SITE AT ALL TIMES OR DURING CONSTRUCTION.
6. CONTRACTOR SHALL COMPLY WITH ALL APPLICABLE OCCUPATIONAL SAFETY AND HEALTH ADMINISTRATION REGULATION.
7. CONTRACTOR SHALL CALL BLUE STAKE (1–800–782–5348) 48 HOURS PRIOR TO COMMENCEMENT OF CONSTRUCTION IN ORDER TO VERIFY LOCATION OF ALL UTILITIES.
8. CONTRACTOR SHALL OBTAIN ALL PERMITS INCLUDING THOSE FOR GRADING AND AIR POLLUTION, REQUIRED BY GOVERNMENTAL AGENCIES, NO WORK AS DELINEATED ON THESE PLANS SHALL BE STARTED UNTIL THE CONTRACTOR HAS OBTAINED ALL THE NECESSARY PERMITS FROM ALL AFFECTED AGENCIES.
9. UPON COMMENCEMENT OF WORK, TRAFFIC CONTROL DEVICES SHALL BE POSTED AND MAINTAINED BY THE CONTRACTOR UNTIL SUCH TIME AS THE WORK IS COMPLETED. ALL WARNING SIGNS, BARRICADES, ETC., SHALL BE IN ACCORDANCE WITH THE MANUAL OF UNIFORM TRAFFIC CONTROL DEVICES, ADOPTED BY THE STATE OF ARIZONA PURSUANT TO A.R.S. 28–650.
10. IF CONDITIONS ARE ENCOUNTERED DURING THE COURSE OF CONSTRUCTION WHICH ARE BEYOND THE SCOPE OF THE DESIGN, OR ARE NOT ADDRESSED WITHIN THE APPROVED PLANS, THE CONTRACTOR SHALL IMMEDIATELY CEASE WORK IN THE AREA OF QUESTION AND NOTIFY THE ENGINEER OF RECORD. THE ENGINEER SHALL THEN DETERMINE AN APPROPRIATE COURSE OF ACTION AND, IF REQUIRED, WILL SUBMIT ANY REVISED OR SUPPLEMENTAL IMPROVEMENT PLANS FOR REVIEW AND APPROVAL BY CITY OF TUCSON DEVELOPMENT SERVICES.
11. THE CONTRACTOR SHALL BE RESPONSIBLE FOR THE CARE AND MAINTENANCE OF EXISTING IMPROVEMENTS AND VEGETATION IN THE WORK AREA. PAVEMENT, CURBS, PEDESTRIAN AREAS, AND ANY OTHER EXISTING IMPROVEMENTS DAMAGED DURING CONSTRUCTION ARE TO BE REPLACED, IN KIND, BY THE CONTRACTOR. ANY EXISTING UNDERGROUND IMPROVEMENTS, STRUCTURES, OR OBSTRUCTIONS WHETHER REFLECTED ON THESE PLANS OR NOT SHALL BE MOVED, ALTERED, OR REPAIRED BY THE CONTRACTOR WHEN ENCOUNTERED, AS DIRECTED BY THE ENGINEER OF RECORD, OR OTHER AUTHORIZED PERSON AND IS CONSIDERED TO BE PART OF THIS PROJECT.
12. ACCEPTANCE OF THESE PLANS DOES NOT CONSTITUTE NOR IMPLY ACCEPTANCE OF ANY OF THE FOLLOWING:
    A. WALLS, RETAINING OR OTHER TYPES;
    B. ANY REINFORCED CONCRETE STRUCTURES;

    THE ITEMS LISTED ABOVE ARE APPROVED FOR LOCATION ONLY. SEPARATE PLAN CHECKS AND PERMITS ARE REQUIRED, ALL IN ACCORDANCE WITH THE APPLICABLE CODES OF THE CITY OF TUCSON.
14. THE CONTRACTOR SHALL GIVE FORTY–EIGHT (48) HOURS NOTICE WHEN HE SHALL REQUIRE THE SERVICES OF THE ENGINEER OR ANY OTHER PERSON PROPERLY AUTHORIZED FOR SUCH PURPOSE FOR LAYING OUT ANY PORTION OF THE WORK. HE SHALL ALSO DIG ALL STAKE HOLES NECESSARY TO GIVE LINE AND LEVELS AND SHALL PROVIDE ASSISTANCE CALLED FOR BY THE ENGINEER OR HIS ASSISTANTS UPON ANY PART OF THE WORK, WHENEVER SO REQUESTED, AND SHALL PRESERVE ALL STAKES SET FOR THE LINES, LEVELS, OR MEASUREMENTS OF THE WORK IN THEIR PROPER PLACES UNTIL AUTHORIZED TO REMOVE THEM BY THE ENGINEERS. ANY EXPENSE INCURRED IN REPLACING ANY STAKES WHICH THE CONTRACTOR OR HIS SUBORDINATES MAY HAVE FAILED TO PRESERVE SHALL BE CHARGED TO THE CONTRACTOR.
15. IT SHALL BE THE CONTRACTOR'S RESPONSIBILITY TO FURNISH, HAUL, AND APPLY ALL WATER REQUIRED FOR COMPACTION, AND FOR THE CONTROL OF DUST FROM CONSTRUCTION.
16. IT SHALL BE THE CONTRACTOR'S RESPONSIBILITY TO COMPLY WITH ARIZONA POLLUTION DISCHARGE ELIMINATION SYSTEM (AZPDES) PERMIT AZG2013–001 IN ACCORDANCE WITH THE REPORT AND POLLUTION PLANS PREPARED BY THE ENGINEER.
17. GRADED AREAS SHALL BE CONSTRUCTED TO WITHIN 0.10 FEET OF FINISH GRADE ELEVATIONS AS SHOWN ON THIS PLAN.
18. A REPORT OF SOILS INVESTIGATIONS, INCLUDING RECOMMENDATIONS FOR GRADING PROCEDURES, HAS BEEN PREPARED BY TERRACON CONSULTANTS, INC., DATED APRIL 26, 2019 JOB NO. 63195036, FOR THIS PROJECT. EARTHWORK SHALL CONFORM TO THE RECOMMENDATIONS CONTAINED IN SAID REPORT AND ANY AMENDMENTS MADE THERETO.
19. THE SOILS ENGINEER SHALL OBSERVE, INSPECT, AND TEST ALL CONSTRUCTION OPERATIONS, INCLUDING BUT NOT LIMITED TO: CLEARING, GRUBBING, SUBGRADE PREPARATION, STRUCTURAL, TRENCH EXCAVATION AND BACKFILL, MATERIAL TESTING, TOGETHER WITH PLACEMENT OF FILL. SAID ENGINEER SHALL CERTIFY IN WRITING, THAT ALL SOILS OPERATIONS AND MATERIALS USED FOR THIS DEVELOPMENT WERE PERFORMED IN ACCORDANCE WITH THE RECOMMENDATIONS AS SET FORTH IN THE GEOTECHNICAL INVESTIGATION OF RECORD AND ARE IN CONFORMANCE WITH THE ACCEPTED PLANS AND SPECIFICATIONS. CERTIFICATION, IN WRITING, IS TO BE RECEIVED BY THE CITY ENGINEER OF THE CITY OF TUCSON PRIOR TO THE REQUEST FOR FINAL INSPECTION AND RELEASE OF ASSURANCES.
20. GRADING BOUNDARIES SHALL BE CLEARLY MARKED, AND ALL WORK WILL BE CONFINED TO APPROVED PROJECT LIMITS AS SHOWN ON THESE PLANS AND STAKED BY THE ENGINEER.
21. IT SHALL BE THE RESPONSIBILITY OF THE CONTRACTOR AND/OR THE SURVEYOR PROVIDING THE CONSTRUCTION LAYOUT TO VERIFY THE BENCHMARK AND COMPARE THE SITE CONDITIONS WITH THE PLANS AND TO NOTIFY THE ENGINEER OF ANY DISCREPANCIES OBSERVED. SHOULD ANY BENCHMARK, GRADE, OR DESIGN, INDICATED ON THE APPROVED PLANS, BE SUSPECT, THE ENGINEER SHALL BE NOTIFIED OF SAID BENCHMARK, GRADE, OR DESIGN PROBLEM AT LEAST TWENTY–FOUR HOURS BEFORE CONSTRUCTION IS SCHEDULED TO BEGIN ON THE AFFECTED AREA.
22. IT SHALL BE THE SOLE RESPONSIBILITY OF THE OWNER TO OBTAIN, PRIOR TO CONSTRUCTION, ALL PERMITS, AGREEMENTS, AND EASEMENTS NECESSARY FOR THE CONSTRUCTION OF THIS PROJECT. THE CONTRACTOR SHALL NOT ENCROACH INTO AREAS OUTSIDE THE SCOPE OF DESIGN SHOWN ON THE APPROVED PLANS WITHOUT PROPER AUTHORIZATION FROM THE AFFECTED PARTY.
23. THE PROFESSIONAL ENGINEER OF RECORD SHALL CERTIFY, IN WRITING, THAT ALL IMPROVEMENTS, WHETHER PRIVATE OR PUBLIC, HAVE BEEN CONSTRUCTED, PLACED, INSTALLED, ETC. IN SUBSTANTIAL CONFORMANCE WITH THE ACCEPTED PLANS FOR THIS DEVELOPMENT. CERTIFICATIONS, IN WRITING, ARE TO BE RECEIVED BY THE CITY ENGINEER, OR THE CITY OF TUCSON, PRIOR TO THE REQUEST FOR ANY BUILDING PERMITS, FINAL INSPECTION, AND/OR RELEASE OF ASSURANCES.
24. IT SHALL BE THE RESPONSIBILITY OF THE CONTRACTOR TO VERIFY ALL QUANTITIES, INCLUDING EXCAVATION, BORROW EMBANKMENT, SHRINK OR SWELL, GROUND COMPACTION, HAUL, AND ANY OTHER ITEMS AFFECTING THE BID TO COMPLETE THE GRADING TO THE ELEVATIONS SHOWN ON THESE PLANS AND TO BASE THE BID SOLELY UPON HIS OWN VERIFIED QUANTITIES. IT SHALL BE THE CONTRACTOR'S RESPONSIBILITY TO NOTIFY THE ENGINEER, PRIOR TO CONSTRUCTION, OF ANY MAJOR DISCREPANCIES BETWEEN HIS ESTIMATED QUANTITIES AND THOSE SHOWN ON THE PLANS.
25. ALL CUT AND FILL SLOPES STEEPER THAN 3:1 SHALL BE PROTECTED PER REPORT OF SOILS INVESTIGATION PREPARED BY TERRACON CONSULTANTS, INC.
26. ALL GRADES SHOWN ARE FINISH GRADES.
27. ALL PROPOSED DRAINAGE STRUCTURES SHALL BE PRIVATE.
28. NO WASH OUT/CLEAN OUT OR STORAGE OF CONSTRUCTION MATERIAL OR VEHICLES SHALL BE PLACED IN THE BASINS.
29. THE CITY STAFF MAY PERIODICALLY INSPECT THE PRIVATE DRAINAGE AND RETENTION/DETENTION FACILITIES TO VERIFY THAT SCHEDULED AND UNSCHEDULED MAINTENANCE ACTIVITIES ARE BEING PERFORMED ADEQUATELY.

NO.	DATE	REVISION	BY	CH	APPR

Call at least two full working days before you begin excavation.
ARIZONA 811
Arizona Blue Stake, Inc.
Dial 8-1-1 or 1-800-STAKE-IT (782-5348)
In Maricopa County: (602) 263-1100

Registered Professional Engineer (Civil)
CERTIFICATE NO. 10011
EDWIN BRUCE WILSON
Date Signed 10-30-19
ARIZONA, U.S.A.
EXPIRES 12/31/2019

eec
civil engineering • land development
surveying • environmental services
staking • flood control and drainage
transportation
Engineering and Environmental Consultants, Inc.
555 E. River Road, Suite 301 | Tucson, Arizona 85704
Tel 520.321.4625 | Fax 520.321.0333

DP19–0201

AUGUST 2019
EEC JOB NO 204014.135

DEVELOPMENT PACKAGE
FOR
TEP TUCSON SUBSTATION

A PORTION OF BLOCK 54 OF CITY OF TUCSON, BK. 2 M&P, PG. 4
BEING A PORTION OF SECTION 12, T14S, R13E, G&SRM, CITY OF TUCSON, PIMA COUNTY, ARIZONA

COT ADMINISTRATIVE ADDRESS:
247 W. 4TH STREET
TUCSON, ARIZONA 85705

REVISIONS

DATE	ENG	TECH	REV
JULY 2019	M. JACKSON	D. GEERLIGS	00

DESCRIPTION:
JOB: 9788.00
WO: 6245721
TUCSON SUBSTATION

SCALE FACTOR: DATE
CONTRACTED ENG.: DATE
ENGINEERING TECH.: DATE
PROJECT ENGINEER: DATE
ENGINEER APPROVAL: DATE

AUTOCADD

Tucson Electric Power Company
TUCSON, ARIZONA

TITLE: SITE GRADING
SITE/GRADING NOTES
TUCSON SUBSTATION

TRSQ T14S,R13E,S12,NE
REF # N/A
DWG # 0070-138-05-0002
REV 00
SHEET DP02

N:\204014.135 TEP Tucson Substation\950 CADD\955 DWG\DP\0070-138-05-0002.dwg Plotted: Oct 29, 2019 - 2:57pm bbenor

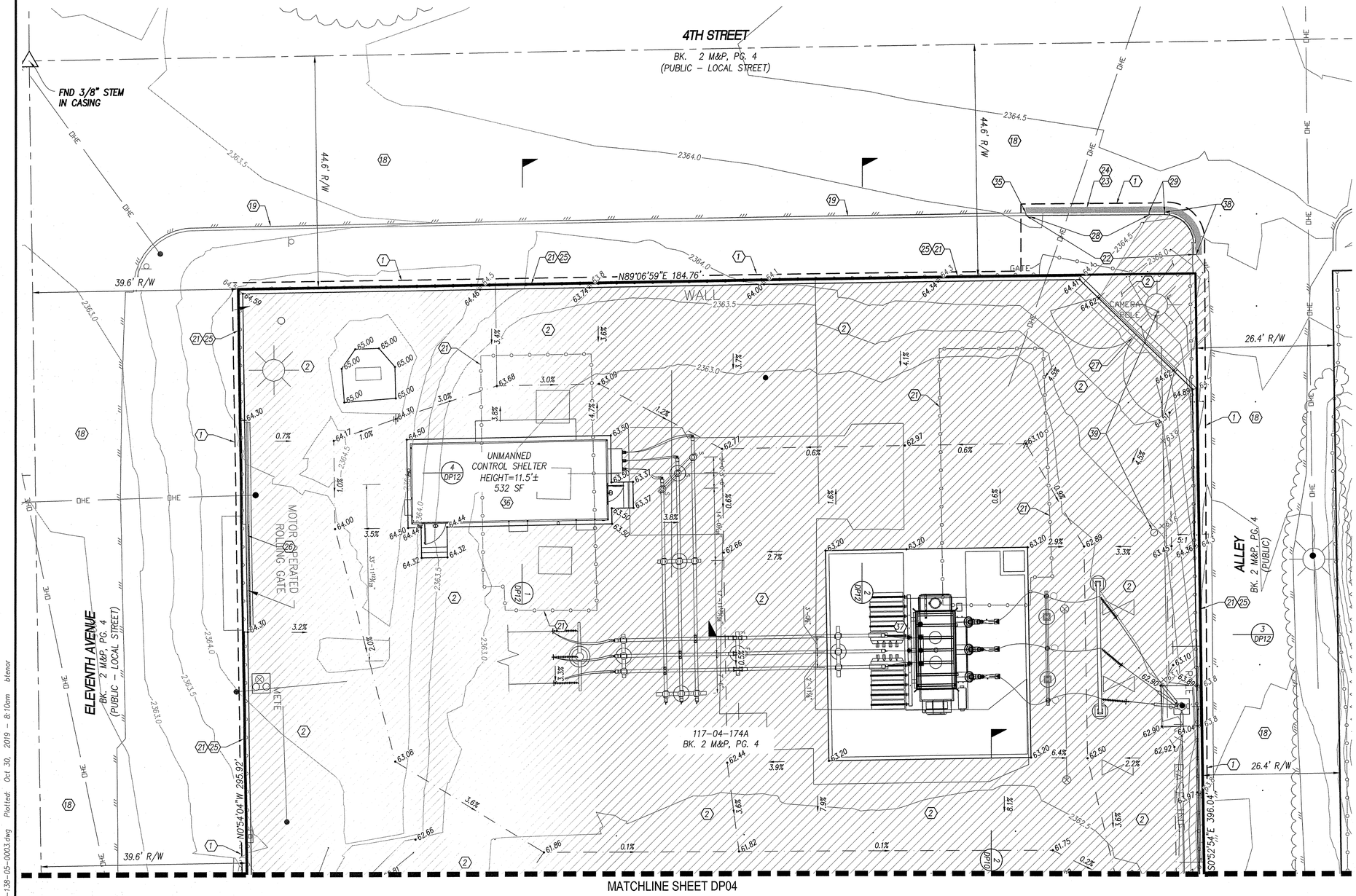

MATCHLINE SHEET DP04

0' 10' 20' 30'

SCALE: 1"=10'
CONTOUR INTERVAL=1 FOOT

KEY NOTES

1. PROPOSED GRADING LIMITS.
2. PROPOSED 4" THICK LIME TREATED STABILIZED AGGREGATE BASE OVER SUBGRADE SCARIFIED TO 10" MINIMUM DEPTH AND COMPACTED TO 95% MINIMUM.
18. EXISTING PAVEMENT TO REMAIN.
19. EXISTING VERTICAL CURB TO REMAIN.
21. REMOVE ENTIRE EXISTING PERIMETER CHAIN LINK FENCE AND GATES.
22. REMOVE 38± LF EXISTING CURB/DRIVEWAY DEPRESSION.
23. SAWCUT EXISTING PAVEMENT 1' MINIMUM FROM EDGE, TACK AND JOIN NEW PAVEMENT TO EXISTING PAVEMENT, MATCH EXISTING PAVEMENT FINISHED GRADE.
24. PAVEMENT REPLACED IN 4TH STREET AFTER SAWCUT AND REMOVAL SHALL MATCH EXISTING 4TH STREET PAVEMENT SECTION IN KIND.
25. PROPOSED CMU SCREEN WALL (HEIGHT 10'–10" MAX ABOVE F.G.). SEE STRUCTURAL PLANS FOR DETAILS, NOT A PART OF THIS PLAN/PERMIT.
26. PROPOSED 22' MANUAL ROLLING GATE. SEE STRUCTURAL PLANS FOR DETAILS, NOT A PART OF THIS PLAN/PERMIT.
27. PROPOSED 20' MANUAL SWING GATE. SEE STRUCTURAL PLANS FOR DETAILS, NOT A PART OF THIS PLAN/PERMIT.
28. PROPOSED CONCRETE VERTICAL CURB – TYPE 2 PER PAG SD 209, MATCH EXISTING CURB HEIGHT.
29. PROPOSED CONCRETE TERMINAL SECTION PER PAG SD 212.
35. CONCRETE CURB NEW TO EXISTING CONNECTION PER PAG SD 211.
36. PROPOSED CONTROL SHELTER, NOT A PART OF THIS PLAN/PERMIT.
37. PROPOSED TRANSFORMER AND OIL CONTAINMENT STRUCTURE, NOT A PART OF THIS PLAN/PERMIT.
38. PROPOSED 6" X 12" CONCRETE HEADER PER PAG SD 213,
39. EXISTING CAMERA POLE TO BE RELOCATED INSIDE PROPOSED WALL. CONTRACTOR TO COORDINATE WITH TEP PRIOR TO START OF CONSTRUCTION.

NOTE: ALL GRADES SHOWN ARE FINISH SURFACE ELEVATION UNLESS OTHERWISE NOTED.

NO.	DATE	REVISION	BY	CH	APPR

Call at least two full working days before you begin excavation.
ARIZONA 811
Arizona Blue Stake, Inc.
Dial 8-1-1 or 1-800-STAKE-IT (782-5348)
In Maricopa County: (602) 263-1100

Registered Professional Engineer (Civil) CERTIFICATE NO. 10011 EDWIN BRUCE WILSON Date Signed 10/31/19 ARIZONA, U.S.A.
EXPIRES 12/31/2019

eec
Engineering and Environmental Consultants, Inc.
555 E. River Road, Suite 301 | Tucson, Arizona 85704
Tel 520.321.4625 | Fax 520.321.0333
civil engineering • land development
surveying • environmental services
staking • flood control and drainage
transportation

DP19–0201

AUGUST 2019
EEC JOB NO 204014.135

DEVELOPMENT PACKAGE
FOR
TEP TUCSON SUBSTATION

A PORTION OF BLOCK 54 OF CITY OF TUCSON,
BK. 2 M&P, PG. 4
BEING A PORTION OF SECTION 12, T14S, R13E, G&SRM,
CITY OF TUCSON, PIMA COUNTY, ARIZONA

COT ADMINISTRATIVE ADDRESS:
247 W. 4TH STREET
TUCSON, ARIZONA 85705

REVISIONS

DATE	ENG	TECH	REV
JULY 2019	M. JACKSON	D. GEERLIGS	00

DESCRIPTION:
JOB: 9788.00
WO: 6245721
TUCSON SUBSTATION

SCALE FACTOR: DATE
CONTRACTED BY: DATE
ENGINEERING TECH: DATE
PROJECT ENGINEER: DATE
ENGINEER APPROVAL: DATE

AUTOCADD

Tucson Electric Power Company
TUCSON, ARIZONA

TITLE: SITE GRADING
SITE PLAN / GRADING PLAN
TUCSON SUBSTATION

TRS# T14S,R13E,S12,NE
REF # N/A
DWG # 0070-138-05-0003
REV 00 SHEET DP03

N:\204014.135 TEP Tucson Substation\950 CADD\955 DWG\DP\0070-138-05-0003.dwg Plotted: Oct 30, 2019 – 8:10am btenor

MATCHLINE SHEET DP03

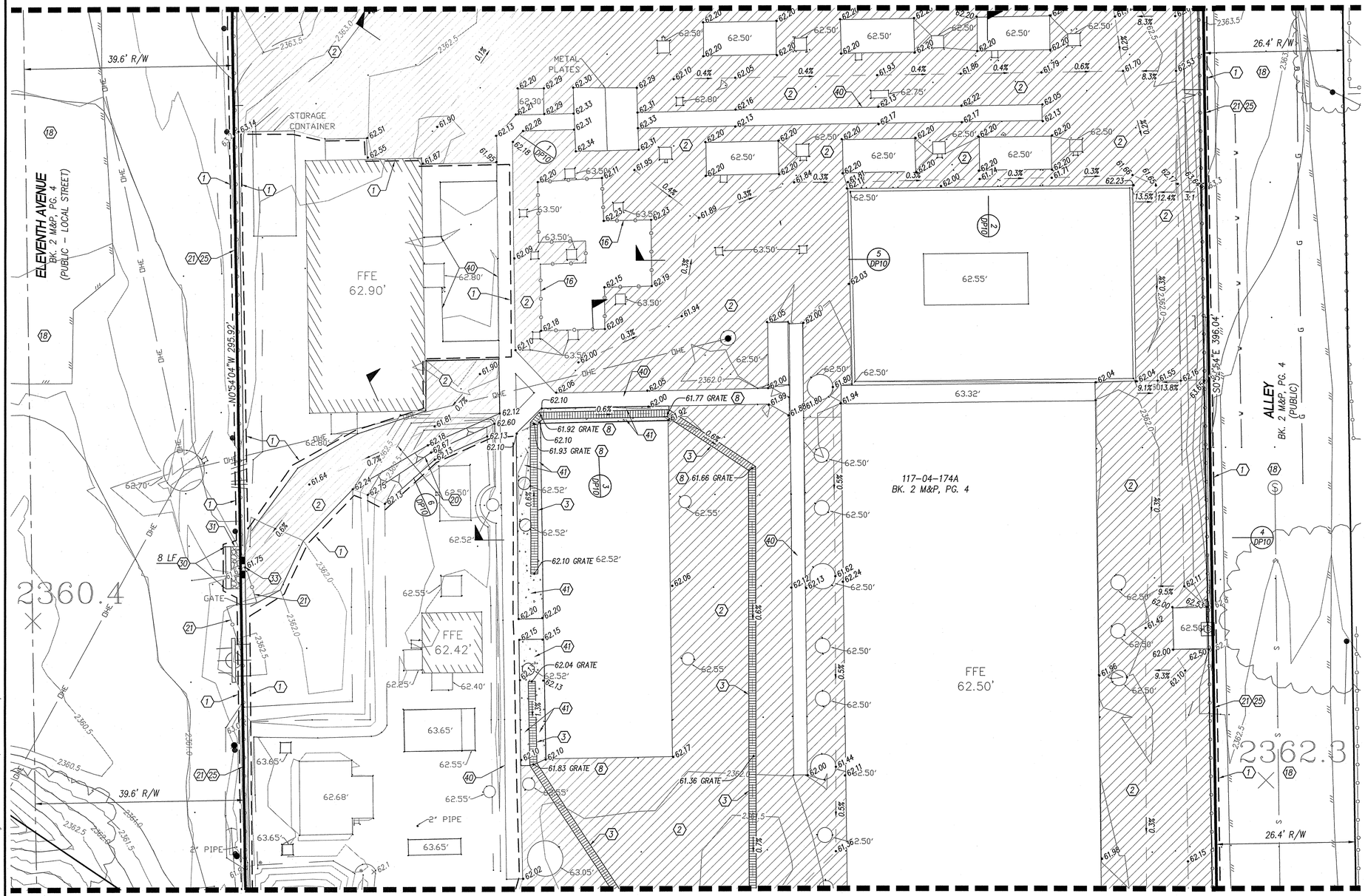

MATCHLINE SHEET DP05

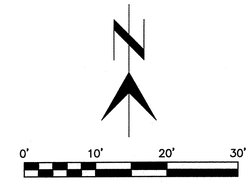

SCALE: 1"=10'
CONTOUR INTERVAL=1 FOOT

KEY NOTES

1. PROPOSED GRADING LIMITS.
2. PROPOSED 4" THICK LIME TREATED STABILIZED AGGREGATE BASE OVER SUBGRADE SCARIFIED TO 10" MINIMUM DEPTH AND COMPACTED TO 95% MINIMUM.
3. PROPOSED TRENCH DRAIN WITH 10" WIDE GRATE (BARRYCRAFT PART NO. B-H20G-B OR APPROVED EQUAL). SEE DETAIL 4 SHEET DP11.
8. PROPOSED CONCRETE TRENCH DRAIN BEND, SEE HORIZONTAL CONTROL PLAN FOR DEFLECTION ANGLE. DESIGN BY STRUCTURAL CONCEPTS INC., NOT A PART OF THIS PLAN OR PERMIT.
16. EXISTING 4' TALL CHAIN LINK FENCE TO REMAIN.
18. EXISTING PAVEMENT TO REMAIN.
20. EXISTING BERM TO BE REMOVED AND REPLACED AS SHOWN TO PROVIDE POSITIVE DRAINAGE AWAY FROM BUILDING.
21. REMOVE ENTIRE EXISTING PERIMETER CHAIN LINK FENCE AND GATES.
25. PROPOSED CMU SCREEN WALL (HEIGHT 10'-10" MAX ABOVE F.G.). SEE STRUCTURAL PLANS FOR DETAILS, NOT A PART OF THIS PLAN/PERMIT.
30. PROPOSED CONCRETE HEADER PER PAG SD 213, MODIFIED TO 12" WIDE X 24" DEEP.
31. PROPOSED 8' X 2' X 8" THICK RIPRAP APRON (D_{50}=4") OVER FILTER FABRIC.
33. PROPOSED (2) 8" X 16" WALL OPENINGS FOR DRAINAGE. SEE STRUCTURAL PLANS FOR DETAILS. NOT A PART OF THIS PLAN/PERMIT.
40. EXISTING CABLE TRENCH TO REMAIN.
41. PROPOSED 4" THICK CONCRETE PER PAG SD 200

NOTE: ALL GRADES SHOWN ARE FINISH SURFACE ELEVATION UNLESS OTHERWISE NOTED.

NO.	DATE	REVISION	BY	CH	APPR

Call at least two full working days before you begin excavation.
ARIZONA 811
Arizona Blue Stake, Inc.
Dial 8-1-1 or 1-800-STAKE-IT (782-5348)
in Maricopa County: (602) 263-1100

Registered Professional Engineer (Civil)
CERTIFICATE NO. 10011
EDWIN BRUCE WILSON
Date Signed 11-20-19
ARIZONA, U.S.A.
EXPIRES 12/31/2019

eec
Engineering and Environmental Consultants, Inc.
555 E. River Road, Suite 301 | Tucson, Arizona 85704
Tel 520.321.4625 | Fax 520.321.0333
civil engineering • land development
surveying • environmental services
staking • flood control and drainage
transportation

DP19-0201

AUGUST 2019
EEC JOB NO 204014.135

DEVELOPMENT PACKAGE
FOR
TEP TUCSON SUBSTATION

A PORTION OF BLOCK 54 OF CITY OF TUCSON, BK. 2 M&P, PG. 4
BEING A PORTION OF SECTION 12, T14S, R13E, G&SRM, CITY OF TUCSON, PIMA COUNTY, ARIZONA

COT ADMINISTRATIVE ADDRESS:
247 W. 4TH STREET
TUCSON, ARIZONA 85705

REVISIONS

DATE	ENG	TECH	REV
JULY 2019	M. JACKSON	D. GEERLIGS	00

DESCRIPTION:
JOB: 9788.00
WO: 6245721
TUCSON SUBSTATION

SCALE FACTOR: DATE
CONTRACTED ENG: DATE
ENGINEERING TECH: DATE
PROJECT ENGINEER: DATE
ENGINEER APPROVAL: DATE

AUTOCADD

Tucson Electric Power Company
TUCSON, ARIZONA

TITLE: SITE GRADING
SITE PLAN / GRADING PLAN
TUCSON SUBSTATION

TRSQ T14S,R13E,S12,NE
REF # N/A
DWG # 0070-138-05-0004
REV 00 SHEET DP04

N:\204014.135 TEP Tucson Substation\950 CADD\955 DWG\DP\0070-138-05-0004.dwg Plotted: Oct 29, 2019 - 2:59pm btenor

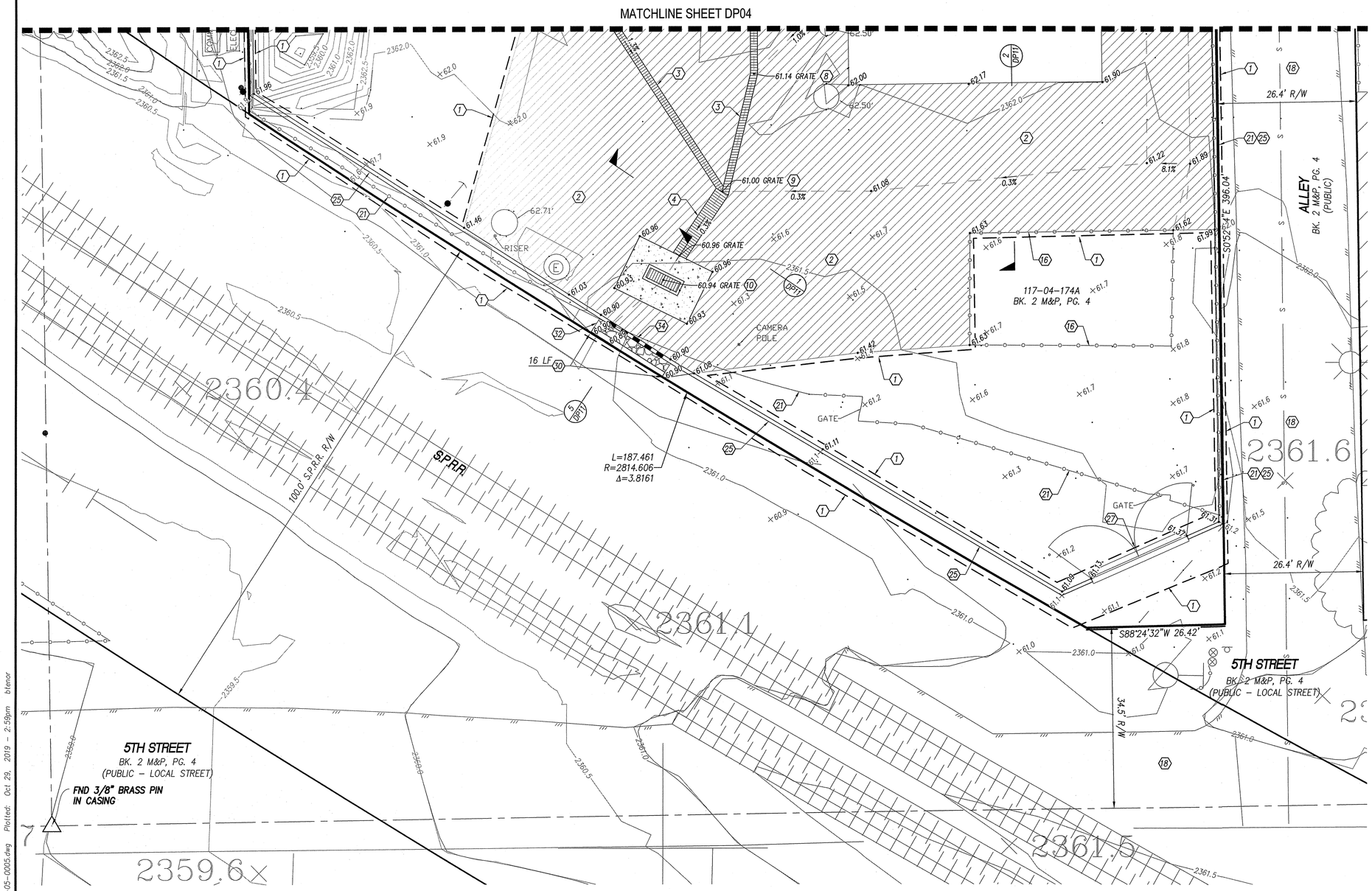

0' 10' 20' 30'

SCALE: 1"=10'
CONTOUR INTERVAL=1 FOOT

KEY NOTES

1. PROPOSED GRADING LIMITS.
2. PROPOSED 4" THICK LIME TREATED STABILIZED AGGREGATE BASE OVER SUBGRADE SCARIFIED TO 10" MINIMUM DEPTH AND COMPACTED TO 95% MINIMUM.
3. PROPOSED TRENCH DRAIN WITH 10" WIDE GRATE (BARRYCRAFT PART NO. B-H20G-B OR APPROVED EQUAL). SEE DETAIL 4 SHEET DP11.
4. PROPOSED TRENCH DRAIN WITH 26" WIDE GRATE (BARRYCRAFT PART NO. B-H20G-H OR APPROVED EQUAL). SEE DETAIL 3 SHEET DP11 .
9. PROPOSED CONCRETE TRENCH DRAIN "Y" SECTION, (2) 10" WIDE GRATES IN, (1) 26" WIDE GRATE OUT. DESIGN BY STRUCTURAL CONCEPTS INC., NOT A PART OF THIS PLAN OR PERMIT.
10. PROPOSED BUBBLE UP DRAINAGE STRUCTURE PER DETAIL 5 SHEET C10.
16. EXISTING 4' TALL CHAIN LINK FENCE TO REMAIN.
18. EXISTING PAVEMENT TO REMAIN.
21. REMOVE ENTIRE EXISTING PERIMETER CHAIN LINK FENCE AND GATES.
25. PROPOSED CMU SCREEN WALL (HEIGHT 10'-10" MAX ABOVE F.G.). SEE STRUCTURAL PLANS FOR DETAILS, NOT A PART OF THIS PLAN/PERMIT.
27. PROPOSED 20' MANUAL SWING GATE. SEE STRUCTURAL PLANS FOR DETAILS, NOT A PART OF THIS PLAN/PERMIT.
30. PROPOSED CONCRETE HEADER PER PAG SD 213, MODIFIED TO 12" WIDE X 24" DEEP.
32. PROPOSED 16' X 2' X 8" THICK RIPRAP APRON (D_{50}=4") OVER FILTER FABRIC.
34. PROPOSED (5) 8" X 16" WALL OPENINGS FOR DRAINAGE. SEE STRUCTURAL PLANS FOR DETAILS. NOT A PART OF THIS PLAN/PERMIT

NOTE: ALL GRADES SHOWN ARE FINISH SURFACE ELEVATION UNLESS OTHERWISE NOTED.

NO.	DATE	REVISION	BY	CH	APPR

Call at least two full working days before you begin excavation.
ARIZONA 811
Arizona Blue Stake, Inc.
Dial 8-1-1 or 1-800-STAKE-IT (782-5348)
In Maricopa County: (602) 263-1100

Registered Professional Engineer (Civil)
CERTIFICATE NO. 10011
EDWIN BRUCE WILSON
Date Signed 10-29-2019
ARIZONA, U.S.A.
EXPIRES 12/31/2019

eec
Engineering and Environmental Consultants, Inc.
555 E. River Road, Suite 301 | Tucson, Arizona 85704
Tel 520.321.4625 | Fax 520.321.0333
civil engineering • land development
surveying • environmental services
staking • flood control and drainage
transportation

DP19-0201

AUGUST 2019
EEC JOB NO 204014.135

DEVELOPMENT PACKAGE
FOR
TEP TUCSON SUBSTATION

A PORTION OF BLOCK 54 OF CITY OF TUCSON,
BK. 2 M&P, PG. 4
BEING A PORTION OF SECTION 12, T14S, R13E, G&SRM,
CITY OF TUCSON, PIMA COUNTY, ARIZONA

COT ADMINISTRATIVE ADDRESS:
247 W. 4TH STREET
TUCSON, ARIZONA 85705

REVISIONS

DATE	ENG	TECH	REV
JULY 2019	M. JACKSON	D. GEERLIGS	00

DESCRIPTION:
JOB: 9788.00
WO: 6245721
TUCSON SUBSTATION

SCALE FACTOR: DATE
CONTRACTED ENG: DATE
ENGINEERING TECH: DATE
PROJECT ENGINEER: DATE
ENGINEER APPROVAL: DATE

AUTOCADD

Tucson Electric Power Company
TUCSON, ARIZONA

TITLE: SITE GRADING
SITE PLAN / GRADING PLAN
TUCSON SUBSTATION

TRSQ T14S,R13E,S12,NE
REF # N/A
DWG # 0070-138-05-0005
REV 00
SHEET DP05

N:\204014.135 TEP Tucson Substation\950 CADD\955 DWG\DP\0070-138-05-0005.dwg Plotted: Oct 29, 2019 - 2:59pm btenor

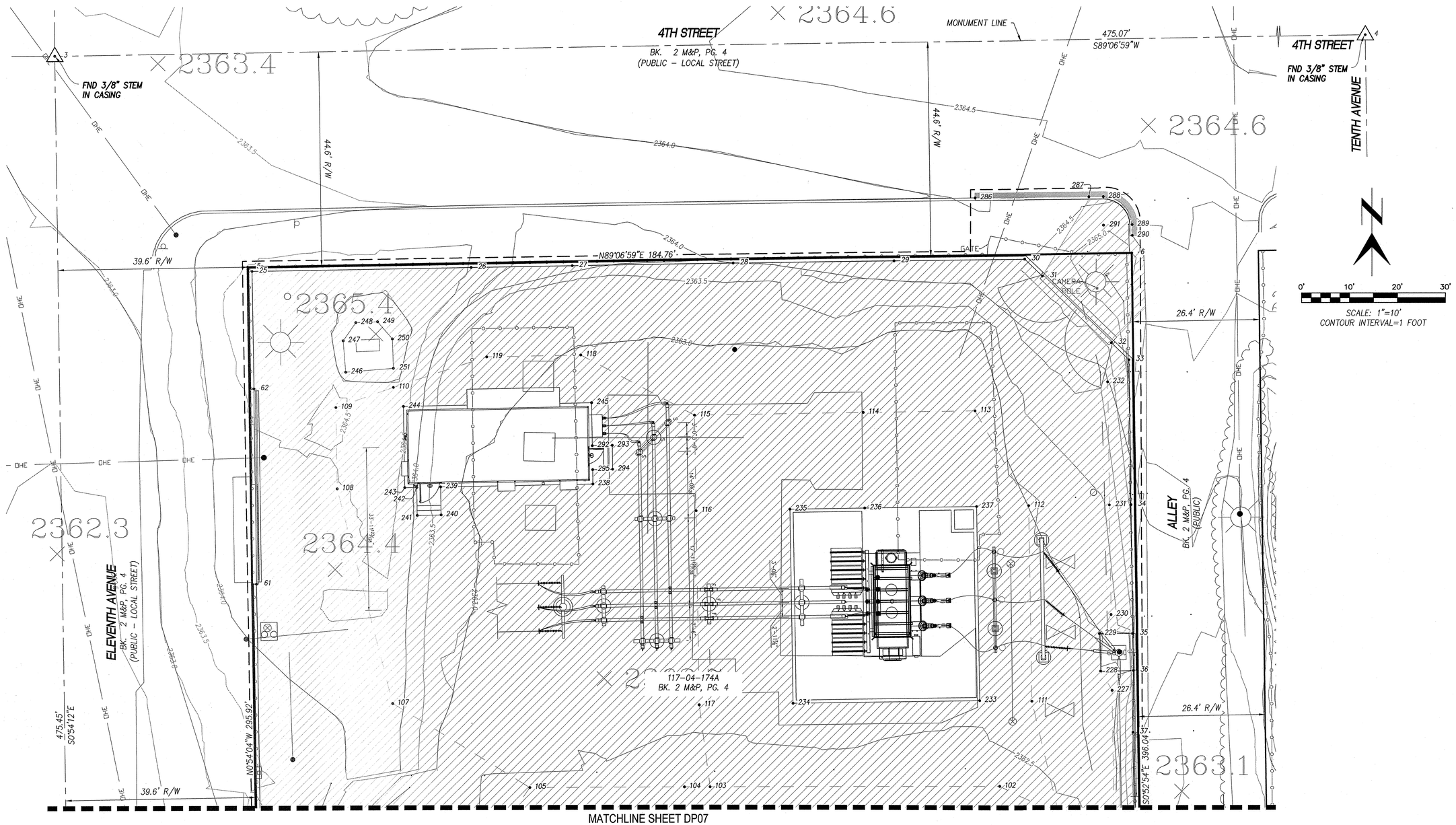

NOTE: ALL GRADES SHOWN ARE FINISH SURFACE ELEVATION UNLESS OTHERWISE NOTED.

DEVELOPMENT PACKAGE
FOR
TEP TUCSON SUBSTATION

A PORTION OF BLOCK 54 OF CITY OF TUCSON, BK. 2 M&P, PG. 4
BEING A PORTION OF SECTION 12, T14S, R13E, G&SRM, CITY OF TUCSON, PIMA COUNTY, ARIZONA

COT ADMINISTRATIVE ADDRESS:
247 W. 4TH STREET
TUCSON, ARIZONA 85705

DP19-0201

AUGUST 2019
EEC JOB NO 204014.135

NO.	DATE	REVISION	BY	CH	APPR

Call at least two full working days before you begin excavation.
ARIZONA 811
Arizona Blue Stake, Inc.
Dial 8-1-1 or 1-800-STAKE-IT (782-5348)
In Maricopa County: (602) 263-1100

Registered Professional Engineer (Civil)
CERTIFICATE NO. 10011
EDWIN BRUCE WILSON
Date Signed 10.30.2019
ARIZONA, U.S.A.
EXPIRES 12/31/2019

eec
Engineering and Environmental Consultants, Inc.
555 E. River Road, Suite 301 | Tucson, Arizona 85704
Tel 520.321.4625 | Fax 520.321.0333
civil engineering • land development
surveying • environmental services
staking • flood control and drainage
transportation

REVISIONS

DATE	ENG	TECH	REV
JULY 2019	M. JACKSON	D. GEERLIGS	00

DESCRIPTION:
JOB: 9788.00
WO: 6245721
TUCSON SUBSTATION

SCALE FACTOR: DATE
CONTRACTED BID: DATE
ENGINEERING TECH: DATE
PROJECT ENGINEER: DATE
ENGINEER APPROVAL: DATE

AUTOCADD

Tucson Electric Power Company
TUCSON, ARIZONA

TITLE: SITE GRADING
HORIZONTAL CONTROL PLAN
TUCSON SUBSTATION

TRSQ T14S,R13E,S12,NE
REF # N/A
DWG # 0070-138-05-0006
REV 00 SHEET DP06

N:\204014.135 TEP Tucson Substation\950 CADD\955 DWG\DP\0070-138-05-0006.dwg Plotted: Oct 30, 2019 - 8:11am btenor

MATCHLINE SHEET DP06

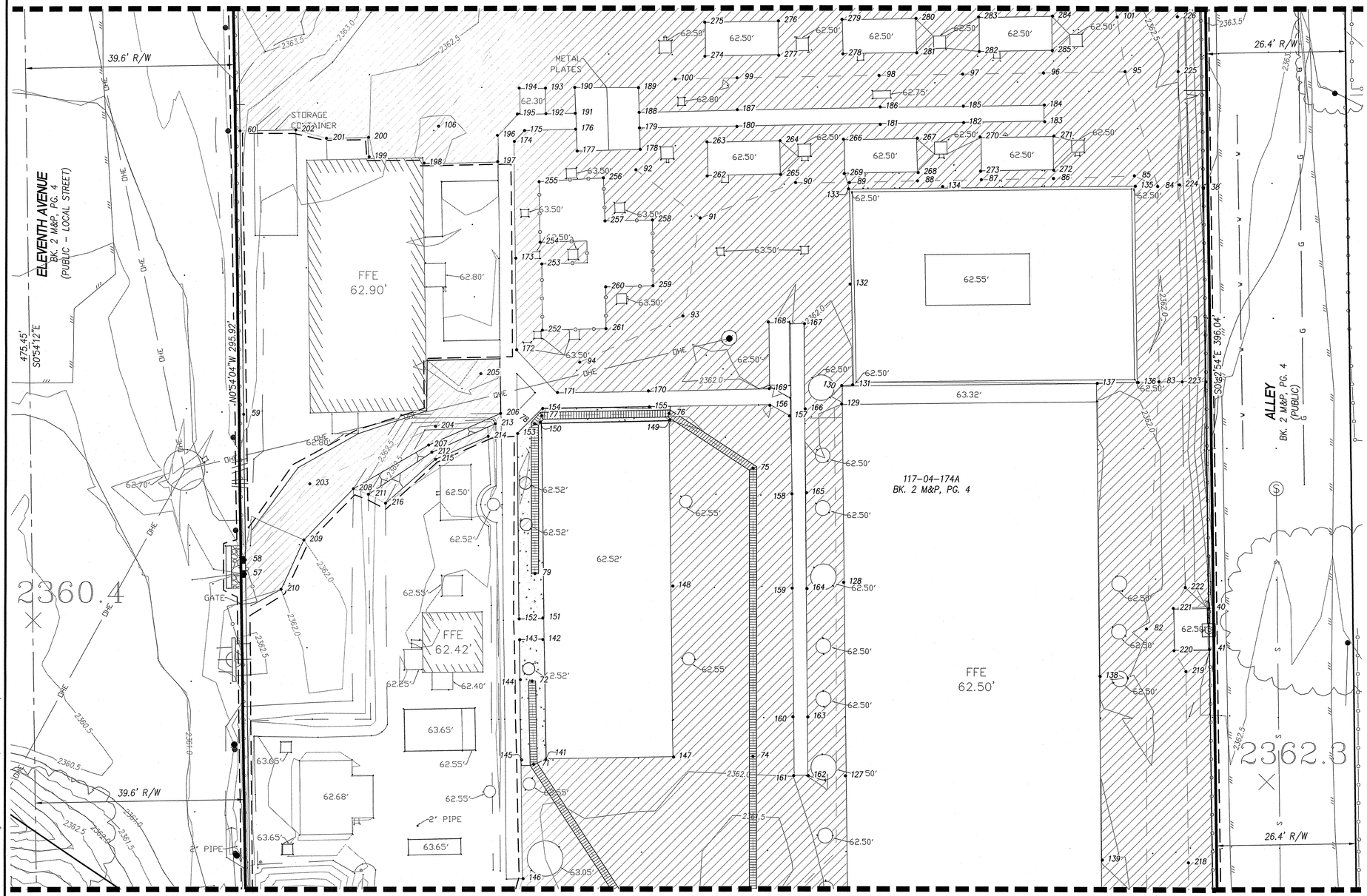

MATCHLINE SHEET DP08

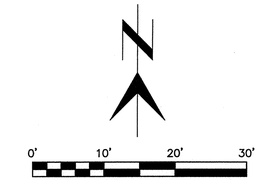

SCALE: 1"=10'
CONTOUR INTERVAL=1 FOOT

NOTE: ALL GRADES SHOWN ARE FINISH SURFACE ELEVATION UNLESS OTHERWISE NOTED.

NO.	DATE	REVISION	BY	CH	APPR

Call at least two full working days before you begin excavation.
ARIZONA 811
Arizona Blue Stake, Inc.
Dial 8-1-1 or 1-800-STAKE-IT (782-5348)
In Maricopa County: (602) 263-1100

Registered Professional Engineer (Civil)
CERTIFICATE NO. 10011
EDWIN BRUCE WILSON
Date Signed 10-28-2019
ARIZONA, U.S.A.
EXPIRES 12/31/2019

eec
Engineering and Environmental Consultants, Inc.
555 E. River Road, Suite 301 | Tucson, Arizona 85704
Tel 520.321.4625 | Fax 520.321.0333
civil engineering • land development
surveying • environmental services
staking • flood control and drainage
transportation

DP19-0201

AUGUST 2019
EEC JOB NO 204014.135

DEVELOPMENT PACKAGE
FOR
TEP TUCSON SUBSTATION

A PORTION OF BLOCK 54 OF CITY OF TUCSON,
BK. 2 M&P, PG. 4
BEING A PORTION OF SECTION 12, T14S, R13E, G&SRM,
CITY OF TUCSON, PIMA COUNTY, ARIZONA

COT ADMINISTRATIVE ADDRESS:
247 W. 4TH STREET
TUCSON, ARIZONA 85705

REVISIONS

DATE	ENG	TECH	REV
JULY 2019	M. JACKSON	D. GEERLIGS	00

DESCRIPTION:
JOB: 9788.00
WO: 6245721
TUCSON SUBSTATION

SCALE FACTOR: DATE
CONTRACTED ENG: DATE
ENGINEERING TECH: DATE
PROJECT ENGINEER: DATE
ENGINEER APPROVAL: DATE

AUTOCADD

Tucson Electric Power Company
TUCSON, ARIZONA

TEP

TITLE: SITE GRADING
HORIZONTAL CONTROL PLAN
TUCSON SUBSTATION

TRSQ T14S,R13E,S12,NE
REF # N/A
DWG # 0070-138-05-0007
REV 00 SHEET DP07

N:\204014.135 TEP Tucson Substation\950 CADD\955 DWG\DP\0070-138-05-0007.dwg Plotted: Oct 29, 2019 - 3:01pm btenor

MATCHLINE SHEET DP07

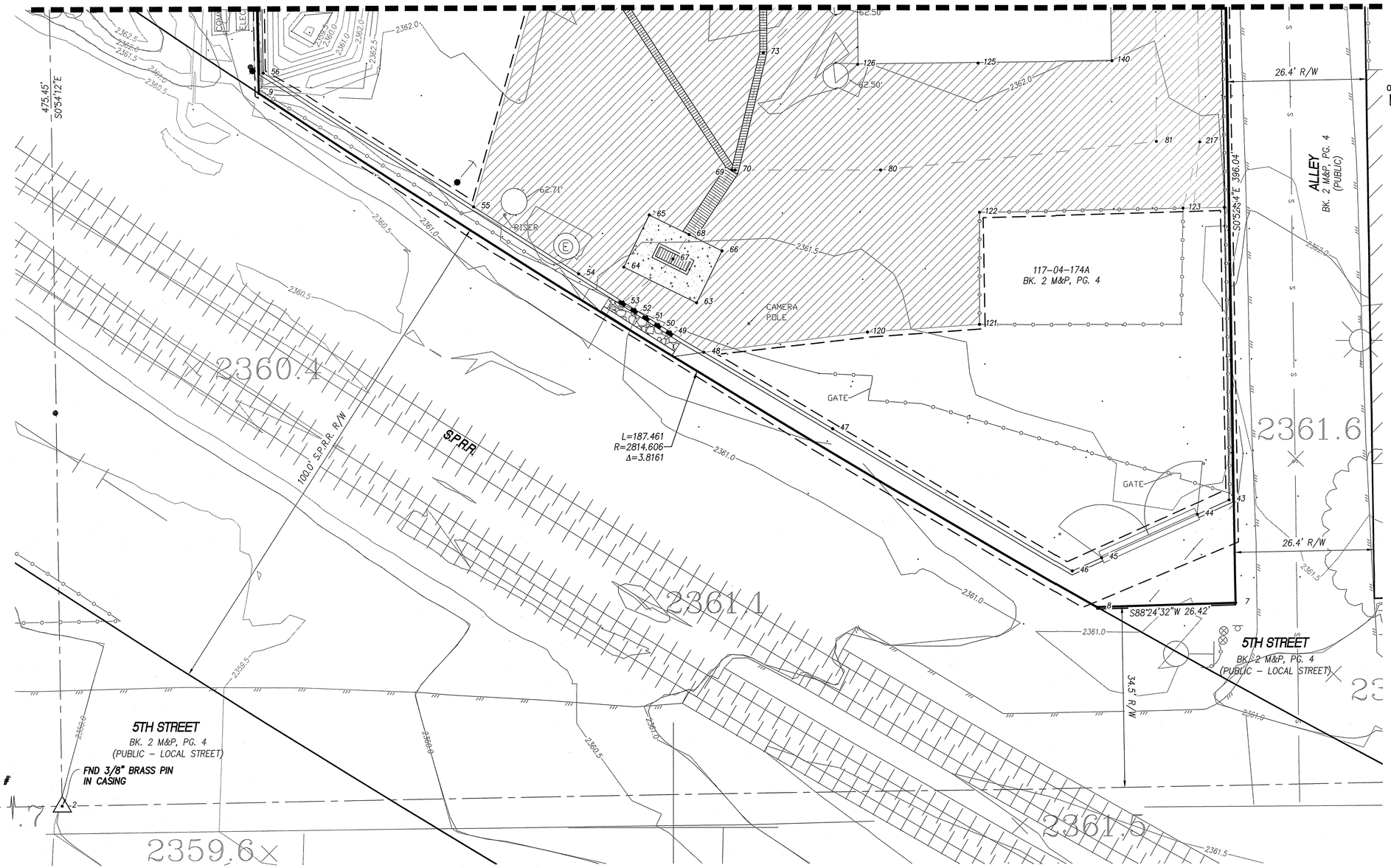

0' 10' 20' 30'

SCALE: 1"=10'
CONTOUR INTERVAL=1 FOOT

NOTE: ALL GRADES SHOWN ARE FINISH SURFACE ELEVATION UNLESS OTHERWISE NOTED.

NO.	DATE	REVISION	BY	CH	APPR

Call at least two full working days before you begin excavation.
ARIZONA 811
Arizona Blue Stake, Inc.
Dial 8-1-1 or 1-800-STAKE-IT (782-5348)
In Maricopa County: (602) 263-1100

Registered Professional Engineer (Civil)
CERTIFICATE NO. 10011
EDWIN BRUCE WILSON
Date Signed 10-30-2019
ARIZONA, U.S.A.
EXPIRES 12/31/2019

eec
Engineering and Environmental Consultants, Inc.
555 E. River Road, Suite 301 | Tucson, Arizona 85704
Tel 520.321.4625 | Fax 520.321.0333
civil engineering • land development
surveying • environmental services
staking • flood control and drainage
transportation

DP19-0201

AUGUST 2019
EEC JOB NO 204014.135

DEVELOPMENT PACKAGE
FOR
TEP TUCSON SUBSTATION

A PORTION OF BLOCK 54 OF CITY OF TUCSON,
BK. 2 M&P, PG. 4
BEING A PORTION OF SECTION 12, T14S, R13E, G&SRM,
CITY OF TUCSON, PIMA COUNTY, ARIZONA

COT ADMINISTRATIVE ADDRESS:
247 W. 4TH STREET
TUCSON, ARIZONA 85705

REVISIONS

DATE	ENG	TECH	REV
JULY 2019	M. JACKSON	D. GEERLIGS	00

DESCRIPTION:
JOB: 9788.00
WO: 6245721
TUCSON SUBSTATION

SCALE FACTOR: DATE
CONTRACTED ENG: DATE
ENGINEERING TECH: DATE
PROJECT ENGINEER: DATE
ENGINEER APPROVAL: DATE

AUTOCADD

Tucson Electric Power Company
TUCSON, ARIZONA

TITLE: SITE GRADING
SITE PLAN / GRADING PLAN
TUCSON SUBSTATION

TRSQ T14S,R13E,S12,NE
REF # N/A
DWG # 0070-138-05-0008
REV 00 SHEET DP08

N:\204014.135 TEP Tucson Substation\950 CADD\955 DWG\DP\0070-138-05-0008.dwg Plotted: Oct 29, 2019 - 3:02pm btenor

COORDINATE POINT TABLE

PT NO	NORTHING	EASTING	ELEVATION	DESCRIPTION
1	448306.51	990478.66	2352.61	FND 1/2" STEM IN CASING
2	448310.88	990762.15	0.00	FND 3/8" BRASS PIN IN CASING
3	448786.27	990754.65	0.00	FND 3/8" STEM IN CASING
4	448793.60	991229.66	0.00	FND 3/8" STEM IN CASING
5	448742.29	990794.94	0.00	PROPERTY CORNER
6	448745.14	990979.67	0.00	PROPERTY CORNER
7	448349.15	990985.77	0.00	PROPERTY CORNER
8	448348.41	990959.36	0.00	PROPERTY CORNER
9	448446.41	990799.60	0.00	PROPERTY CORNER
25	448741.39	990795.87	2364.59	WALL – INSIDE FACE
26	448742.10	990841.64	2364.46	WALL – INSIDE FACE
27	448742.42	990862.79	2363.74	WALL – INSIDE FACE
28	448742.94	990896.41	2364.00	WALL – INSIDE FACE
29	448743.46	990930.02	2364.34	WALL – INSIDE FACE
30	448743.88	990957.31	2364.41	WALL – INSIDE FACE
31	448740.31	990961.01	2364.62	WALL – INSIDE FACE
32	448726.41	990975.40	2364.62	WALL – INSIDE FACE
33	448722.84	990979.10	2364.89	WALL – INSIDE FACE
34	448692.57	990979.56	2364.36	WALL – INSIDE FACE
35	448665.65	990979.98	2363.89	WALL – INSIDE FACE
36	448657.95	990980.10	2364.04	WALL – INSIDE FACE
37	448645.11	990980.04	2363.89	WALL – INSIDE FACE
38	448595.56	990981.06	2363.64	WALL – INSIDE FACE
39	448558.87	990981.62	2363.63	WALL – INSIDE FACE
40	448515.86	990982.28	2362.65	WALL – INSIDE FACE
41	448508.03	990982.40	2362.50	WALL – INSIDE FACE
42	448424.38	990983.69	2361.99	WALL – INSIDE FACE
43	448368.73	990984.55	2361.30	WALL – INSIDE FACE
44	448366.00	990978.49	2361.30	WALL – INSIDE FACE
45	448357.80	990960.25	2361.30	WALL – INSIDE FACE
46	448355.30	990954.69	2361.30	WALL – INSIDE FACE
47	448382.36	990909.02	2361.16	WALL – INSIDE FACE
48	448396.91	990884.46	2361.08	WALL – INSIDE FACE
49	448400.80	990878.08	2360.90	CL WALL OPENING
50	448402.23	990875.83	2360.90	CL WALL OPENING
51	448403.67	990873.58	2360.90	CL WALL OPENING
52	448405.10	990871.33	2360.90	CL WALL OPENING
53	448406.53	990869.08	2360.90	CL WALL OPENING
54	448411.93	990860.61	2361.03	WALL – INSIDE FACE
55	448424.70	990840.56	2361.46	WALL – INSIDE FACE
56	448450.24	990800.45	2361.96	WALL – INSIDE FACE
57	448522.23	990799.32	2361.75	CL WALL OPENING
58	448524.90	990799.28	2361.75	CL WALL OPENING
59	448552.55	990798.84	2362.61	WALL – INSIDE FACE
60	448606.29	990798.00	2363.14	WALL – INSIDE FACE
61	448676.09	990796.90	2364.30	WALL – INSIDE FACE
62	448716.92	990796.26	2364.30	WALL – INSIDE FACE
63	448406.35	990883.08	2360.93	CONCRETE APRON
64	448413.18	990869.21	2360.93	CONCRETE APRON
65	448423.05	990874.07	2360.96	CONCRETE APRON
66	448416.22	990887.94	2360.96	CONCRETE APRON
67	448414.70	990878.58	2360.94	CL GRATE
68	448419.31	990881.66	2360.96	CL GRATE
69	448431.55	990889.84	2361.00	CL GRATE
70	448431.55	990890.44	2361.00	CL GRATE
71	448486.05	990854.10	2361.83	CL GRATE
72	448501.83	990853.78	2362.04	CL GRATE
73	448453.84	990895.84	2361.14	CL GRATE
74	448487.49	990895.77	2361.34	CL GRATE

COORDINATE POINT TABLE

PT NO	NORTHING	EASTING	ELEVATION	DESCRIPTION
75	448542.15	990895.65	2361.66	CL GRATE
76	448552.65	990879.66	2361.77	CL GRATE
77	448552.24	990855.46	2361.92	CL GRATE
78	448550.70	990854.14	2361.93	CL GRATE
79	448522.23	990854.27	2362.10	CL GRATE
80	448431.57	990918.17	2361.08	FLOWLINE
81	448436.97	990970.74	2361.22	FLOWLINE
82	448511.87	990970.45	2361.42	FLOWLINE
83	448558.83	990972.71	2361.55	FLOWLINE
84	448595.90	990972.37	2361.65	FLOWLINE
85	448597.86	990967.94	2361.66	FLOWLINE
86	448597.30	990952.58	2361.71	FLOWLINE
87	448597.04	990938.89	2361.74	FLOWLINE
88	448596.79	990926.76	2361.78	FLOWLINE
89	448596.45	990913.82	2361.81	FLOWLINE
90	448596.45	990903.60	2361.84	FLOWLINE
91	448589.78	990885.50	2361.89	FLOWLINE
92	448598.88	990873.24	2361.95	FLOWLINE
93	448571.13	990882.25	2361.94	FLOWLINE
94	448562.35	990862.63	2362.00	FLOWLINE
95	448617.55	990966.13	2361.70	FLOWLINE
96	448617.23	990950.63	2361.79	FLOWLINE
97	448616.97	990935.28	2361.86	FLOWLINE
98	448616.70	990919.40	2361.93	FLOWLINE
99	448616.24	990892.42	2362.05	FLOWLINE
100	448616.04	990880.71	2362.10	FLOWLINE
101	448627.82	990964.60	2361.72	FLOWLINE
102	448633.89	990952.21	2361.75	FLOWLINE
103	448633.65	990891.70	2361.82	FLOWLINE
104	448633.63	990886.34	2361.82	FLOWLINE
105	448633.55	990854.05	2361.86	FLOWLINE
106	448607.16	990835.75	2361.90	FLOWLINE
107	448651.14	990825.39	2363.08	FLOWLINE
108	448695.93	990813.74	2364.00	FLOWLINE
109	448712.94	990813.44	2364.17	FLOWLINE
110	448717.14	990825.42	2364.30	FLOWLINE
111	448651.60	990958.90	2362.50	FLOWLINE
112	448692.40	990958.20	2362.89	FLOWLINE
113	448712.21	990946.97	2363.10	FLOWLINE
114	448711.80	990923.61	2362.99	FLOWLINE
115	448711.19	990888.36	2362.77	FLOWLINE
116	448691.20	990888.71	2362.66	FLOWLINE
117	448650.70	990889.41	2362.44	FLOWLINE
118	448723.83	990864.59	2363.09	FLOWLINE
119	448723.49	990844.93	2363.68	FLOWLINE
120	448400.77	990915.66	2361.42	FG
121	448402.27	990937.01	2361.63	FG
122	448423.57	990937.03	2361.63	FG
123	448424.25	990975.80	2361.62	FG
124	448452.30	990962.28	2361.90	FG
125	448451.90	990936.77	2362.17	FG
126	448451.62	990913.81	2362.00	FG
127	448483.81	990913.35	2362.11	FG
128	448520.55	990912.91	2362.24	FG
129	448554.43	990912.44	2361.94	FG
130	448557.93	990912.44	2361.93	FG
131	448558.06	990914.53	2361.98	FG
132	448577.16	990914.00	2362.03	FG
133	448595.27	990913.64	2362.11	FG

COORDINATE POINT TABLE

PT NO	NORTHING	EASTING	ELEVATION	DESCRIPTION
134	448595.72	990931.53	2362.00	FG
135	448595.93	990968.13	2362.23	FG
136	448558.68	990968.76	2362.04	FG
137	448558.48	990960.98	2362.04	FG
138	448502.83	990961.67	2361.96	FG
139	448468.03	990962.18	2361.98	FG
140	448452.30	990962.28	2361.90	FG
141	448486.95	990856.41	2362.10	FG
142	448509.74	990855.82	2362.15	FG
143	448509.70	990851.41	2362.15	FG
144	448502.08	990851.54	2362.13	FG
145	448486.89	990851.79	2362.10	FG
146	448464.34	990852.14	2362.02	FG
147	448487.39	990880.70	2362.17	FG
148	448519.86	990880.48	2362.06	FG
149	448551.37	990879.78	2361.92	FG
150	448551.00	990855.17	2362.10	FG
151	448513.81	990855.81	2362.20	FG
152	448513.66	990851.32	2362.20	FG
153	448548.86	990850.90	2362.10	FG
154	448553.62	990855.63	2362.10	FG
155	448553.90	990875.91	2362.00	FG
156	448554.18	990898.81	2361.99	FG
157	448552.16	990902.54	2361.88	FG
158	448537.30	990903.03	2362.00	FG
159	448519.46	990903.13	2362.12	FG
160	448495.01	990903.35	2362.06	FG
161	448483.83	990903.51	2362.01	FG
162	448483.83	990906.28	2362.00	FG
163	448494.98	990906.19	2362.12	FG
164	448519.36	990905.95	2362.13	FG
165	448537.51	990905.82	2362.11	FG
166	448553.51	990905.53	2361.80	FG
167	448569.63	990905.34	2361.96	FG
168	448569.96	990898.46	2362.05	FG
169	448557.34	990898.68	2362.00	FG
170	448556.93	990875.72	2362.05	FG
171	448556.63	990858.41	2362.06	FG
172	448564.73	990850.67	2362.10	FG
173	448582.16	990850.44	2362.09	FG
174	448604.26	990850.16	2362.18	FG
175	448606.31	990852.08	2362.28	FG
176	448606.54	990861.80	2362.31	FG
177	448602.43	990862.12	2362.34	FG
178	448602.73	990874.04	2362.31	FG
179	448606.79	990873.90	2362.33	FG
180	448607.04	990892.43	2362.13	FG
181	448607.44	990919.65	2362.17	FG
182	448607.80	990935.50	2362.17	FG
183	448608.02	990950.89	2362.13	FG
184	448611.18	990950.81	2362.05	FG
185	448610.93	990935.42	2362.22	FG
186	448610.75	990919.64	2362.13	FG
187	448610.23	990892.49	2362.16	FG
188	448609.74	990873.84	2362.31	FG
189	448614.43	990873.70	2362.29	FG
190	448614.46	990861.61	2362.30	FG
191	448609.56	990861.70	2362.33	FG
192	448609.50	990856.13	2362.29	FG

COORDINATE POINT TABLE

PT NO	NORTHING	EASTING	ELEVATION	DESCRIPTION
193	448614.35	990856.04	2362.29	FG
194	448614.37	990851.05	2362.20	FG
195	448609.43	990850.71	2362.21	FG
196	448605.42	990846.94	2362.13	FG
197	448600.45	990847.02	2361.95	FG
198	448600.18	990833.03	2361.87	FG
199	448601.38	990822.54	2362.55	FG
200	448605.09	990822.45	2362.51	FG
201	448604.89	990814.45	2362.61	FG
202	448606.48	990808.64	2362.65	FG
203	448539.32	990811.46	2361.64	FLOWLINE
204	448550.28	990835.29	2361.81	FLOWLINE
205	448560.20	990843.90	2361.90	FLOWLINE
206	448552.69	990847.65	2362.12	FG
207	448546.68	990834.01	2362.18	FG
208	448538.38	990819.71	2362.24	FG
209	448528.64	990810.37	2362.00	FG
210	448519.32	990806.05	2362.00	FG
211	448537.32	990822.57	2362.75	FG
212	448545.31	990834.64	2362.67	FG
213	448550.73	990846.65	2362.60	FG
214	448548.33	990845.31	2362.13	FG
215	448543.98	990835.33	2362.13	FG
216	448535.63	990825.84	2362.13	FG
217	448436.85	990979.00	2361.89	FG
218	448467.58	990978.53	2362.15	FG
219	448503.83	990977.97	2362.10	FG
220	448507.77	990975.69	2362.00	FG
221	448515.82	990975.54	2362.00	FG
222	448519.78	990977.80	2362.11	FG
223	448558.83	990977.12	2362.16	FG
224	448596.20	990976.55	2362.17	FG
225	448617.60	990976.22	2362.53	FG
226	448627.93	990976.06	2362.67	FG
227	448653.84	990975.66	2362.92	FG
228	448657.83	990973.24	2362.90	FG
229	448665.67	990972.98	2362.90	FG
230	448669.64	990975.41	2363.10	FG
231	448692.53	990975.06	2363.45	FG
232	448718.25	990974.67	2364.51	FG
233	448651.72	990948.02	2363.20	FG
234	448651.04	990909.02	2363.20	FG
235	448691.54	990908.32	2363.20	FG
236	448691.81	990923.95	2363.20	FG
237	448692.21	990947.32	2363.20	FG
238	448696.82	990867.15	2363.50	FG
239	448696.27	990835.33	2364.44	FG
240	448690.44	990835.43	2364.32	FG
241	448690.35	990830.43	2364.32	FG
242	448696.18	990830.33	2364.44	FG
243	448696.14	990827.83	2364.50	FG
244	448713.14	990827.53	2364.50	FG
245	448713.82	990866.86	2363.50	FG
246	448720.35	990815.48	2365.00	FG
247	448726.89	990814.96	2365.00	FG
248	448730.66	990817.59	2365.00	FG
249	448730.83	990822.14	2365.00	FG
250	448727.25	990825.23	2365.00	FG
251	448721.14	990825.40	2365.00	FG

COORDINATE POINT TABLE

PT NO	NORTHING	EASTING	ELEVATION	DESCRIPTION
252	448568.42	990855.53	2362.18	FG
253	448581.04	990855.37	2362.29	FG
254	448585.20	990855.07	2362.25	FG
255	448596.61	990854.89	2362.20	FG
256	448597.36	990867.06	2362.11	FG
257	448589.23	990867.40	2362.23	FG
258	448589.39	990876.43	2362.23	FG
259	448576.86	990876.54	2362.19	FG
260	448576.65	990867.55	2362.15	FG
261	448568.71	990867.62	2362.09	FG
262	448597.71	990886.80	2362.20	FG
263	448604.14	990886.75	2362.20	FG
264	448604.34	990900.63	2362.20	FG
265	448597.98	990900.75	2362.20	FG
266	448604.62	990912.66	2362.20	FG
267	448604.83	990926.71	2362.20	FG
268	448598.37	990926.87	2362.20	FG
269	448598.14	990912.83	2362.20	FG
270	448605.12	990938.61	2362.20	FG
271	448605.34	990952.66	2362.20	FG
272	448598.87	990952.61	2362.20	FG
273	448598.63	990938.73	2362.20	FG
274	448620.32	990886.34	2362.20	FG
275	448626.73	990886.29	2362.20	FG
276	448626.94	990900.28	2362.20	FG
277	448620.48	990900.34	2362.20	FG
278	448620.76	990912.52	2362.20	FG
279	448627.23	990912.35	2362.20	FG
280	448627.45	990926.40	2362.20	FG
281	448620.98	990926.56	2362.20	FG
282	448621.24	990938.42	2362.20	FG
283	448627.74	990938.30	2362.20	FG
284	448627.95	990952.35	2362.20	FG
285	448621.48	990952.30	2362.20	FG
286	448756.71	990946.95	2364.03	GUTTER
287	448756.92	990970.71	2364.34	GUTTER
288	448756.94	990973.71	2364.35	GUTTER
289	448751.05	990979.76	2364.57	GUTTER
290	448748.78	990979.80	2364.68	GUTTER
291	448750.94	990973.76	0.00	RADIUS POINT
292	448704.82	990867.01	2363.50	FG
293	448704.89	990871.19	2363.37	FG
294	448699.89	990871.27	2363.37	FG
295	448699.82	990867.10	2363.50	FG

NOTE: ALL GRADES SHOWN ARE FINISH SURFACE ELEVATION UNLESS OTHERWISE NOTED.

NO.	DATE	REVISION	BY	CH	APPR

Call at least two full working days before you begin excavation.
ARIZONA 811
Arizona Blue Stake, Inc.
Dial 8-1-1 or 1-800-STAKE-IT (782-5348)
In Maricopa County: (602) 263-1100

Registered Professional Engineer (Civil)
CERTIFICATE NO. 10011
EDWIN BRUCE WILSON
Date Signed 10-30-2019
ARIZONA, U.S.A.
EXPIRES 12/31/2019

eec
Engineering and Environmental Consultants, Inc.
555 E. River Road, Suite 301 | Tucson, Arizona 85704
Tel 520.321.4625 | Fax 520.321.0333
civil engineering • land development
surveying • environmental services
staking • flood control and drainage
transportation

DP19–0201

AUGUST 2019
EEC JOB NO 204014.135

DEVELOPMENT PACKAGE
FOR
TEP TUCSON SUBSTATION

A PORTION OF BLOCK 54 OF CITY OF TUCSON,
BK. 2 M&P, PG. 4
BEING A PORTION OF SECTION 12, T14S, R13E, G&SRM,
CITY OF TUCSON, PIMA COUNTY, ARIZONA

COT ADMINISTRATIVE ADDRESS:
247 W. 4TH STREET
TUCSON, ARIZONA 85705

REVISIONS

DATE	ENG	TECH	REV
JULY 2019	M. JACKSON	D. GEERLIGS	00

DESCRIPTION:
JOB: 9788.00
WO: 6245721
TUCSON SUBSTATION

SCALE FACTOR: ____ DATE ____
CONTRACTED ENG: ____ DATE ____
ENGINEERING TECH: ____ DATE ____
PROJECT ENGINEER: ____ DATE ____
ENGINEER APPROVAL: ____ DATE ____

AUTOCADD

Tucson Electric Power Company
TUCSON, ARIZONA

TITLE: SITE GRADING
COORDINATE POINT TABLES
TUCSON SUBSTATION

TRSQ T14S,R13E,S12,NE
REF # N/A
DWG # 0070-138-05-0009
REV 00
SHEET DP09

N:\204014.135 TEP Tucson Substation\950 CADD\955 DWG\DP\0070-138-05-0009.dwg Plotted: Oct 29, 2019 – 3:02pm btenor

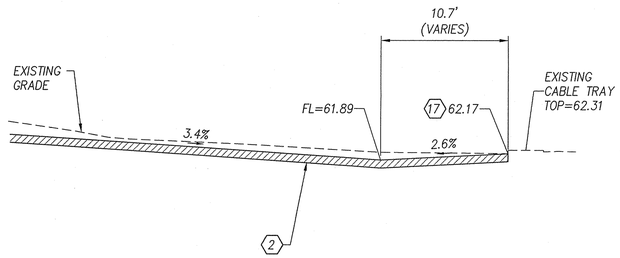

1 SECTION
NTS

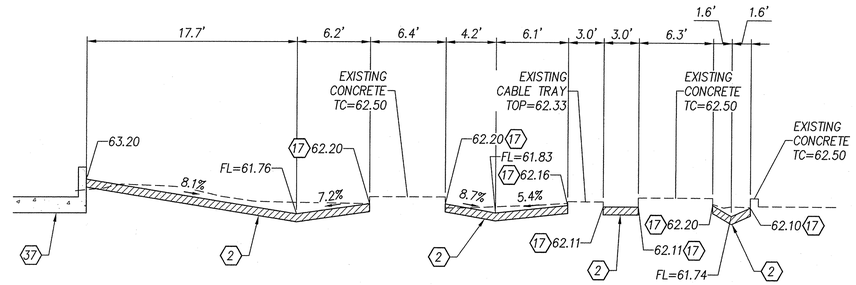

2 SECTION
NTS

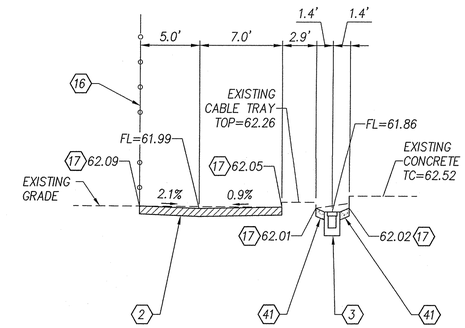

3 SECTION
NTS

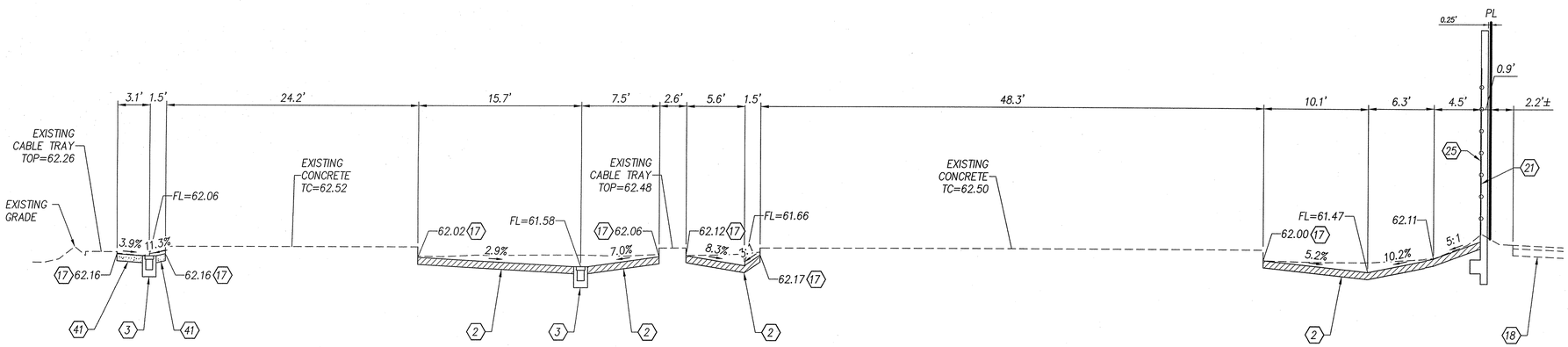

4 SECTION
NTS

KEY NOTES

2. PROPOSED 4" THICK LIME TREATED STABILIZED AGGREGATE BASE OVER SUBGRADE SCARIFIED TO 10" MINIMUM DEPTH AND COMPACTED TO 95% MINIMUM.
3. PROPOSED TRENCH DRAIN WITH 10" WIDE GRATE (BARRYCRAFT PART NO. B-H20G-B OR APPROVED EQUAL). SEE DETAIL 4 SHEET DP11.
16. EXISTING 4' TALL CHAIN LINK FENCE TO REMAIN.
17. MATCH EXISTING GRADE ±.
18. EXISTING PAVEMENT TO REMAIN.
20. EXISTING BERM TO BE REMOVED AND REPLACED AS SHOWN TO PROVIDE POSITIVE DRAINAGE AWAY FROM BUILDING.
21. REMOVE ENTIRE EXISTING PERIMETER CHAIN LINK FENCE AND GATES.
25. PROPOSED CMU SCREEN WALL (HEIGHT 10'-10" MAX ABOVE F.G.). SEE STRUCTURAL PLANS FOR DETAILS, NOT A PART OF THIS PLAN/PERMIT.
41. PROPOSED 4" THICK CONCRETE PER PAG SD 200

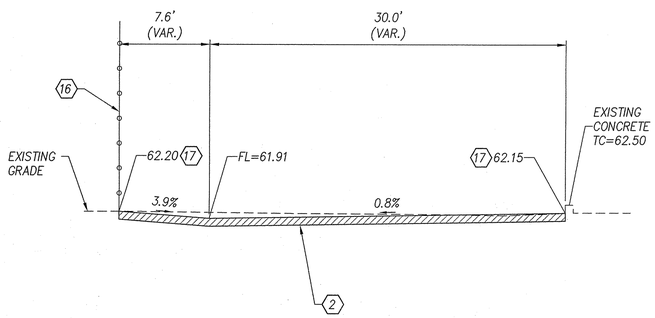

5 SECTION
NTS

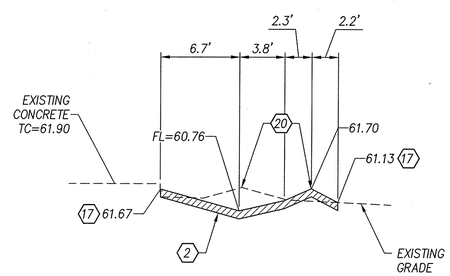

6 SECTION
NTS

NO.	DATE	REVISION	BY	CH	APPR

Call at least two full working days before you begin excavation.
ARIZONA 811
Arizona Blue Stake, Inc.
Dial 8-1-1 or 1-800-STAKE-IT (782-5348)
In Maricopa County: (602) 263-1100

Registered Professional Engineer (Civil)
CERTIFICATE NO. 10011
EDWIN BRUCE WILSON
Date Signed 12-20-2019
ARIZONA, U.S.A.
EXPIRES 12/31/2019

eec
Engineering and Environmental Consultants, Inc.
555 E. River Road, Suite 301 | Tucson, Arizona 85704
Tel 520.321.4625 | Fax 520.321.0333
civil engineering • land development
surveying • environmental services
staking • flood control and drainage
transportation

DP19-0201

AUGUST 2019
EEC JOB NO 204014.135

DEVELOPMENT PACKAGE
FOR
TEP TUCSON SUBSTATION

A PORTION OF BLOCK 54 OF CITY OF TUCSON,
BK. 2 M&P, PG. 4
BEING A PORTION OF SECTION 12, T14S, R13E, G&SRM,
CITY OF TUCSON, PIMA COUNTY, ARIZONA

COT ADMINISTRATIVE ADDRESS:
247 W. 4TH STREET
TUCSON, ARIZONA 85705

REVISIONS

DATE	ENG	TECH	REV
JULY 2019	M. JACKSON	D. GBERLIGS	00

DESCRIPTION:
JOB: 9788.00
WO: 6245721
TUCSON SUBSTATION

SCALE FACTOR: DATE
CONTRACTOR REQ: DATE
ENGINEERING TECH: DATE
PROJECT ENGINEER: DATE
ENGINEER APPROVAL: DATE

AUTOCADD

Tucson Electric Power Company
TUCSON, ARIZONA

TITLE: SITE GRADING DETAIL SHEET TUCSON SUBSTATION

TRSQ T14S,R13E,S12,NE
REF # N/A
DWG # 0070-138-05-0010
REV 00
SHEET DP10

N:\204014.135 TEP Tucson Substation\950 CADD\955 DWG\DP\0070-138-05-0010.dwg Plotted: Oct 29, 2019 - 3:02pm btenor

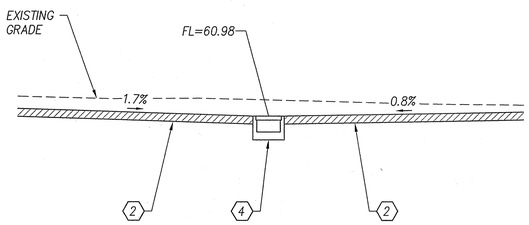

1 SECTION
NTS

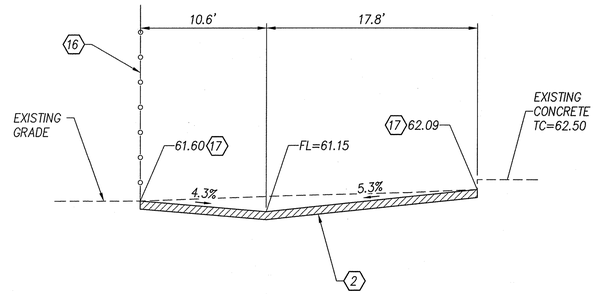

2 SECTION
NTS

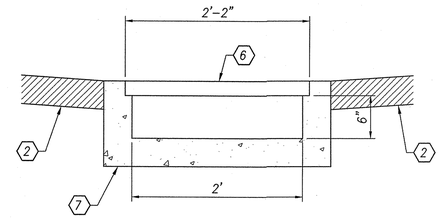

3 TRENCH DRAIN DETAIL
NTS

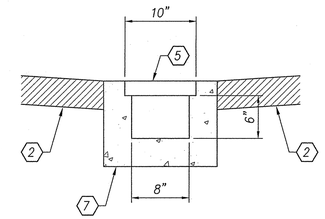

4 TRENCH DRAIN DETAIL
NTS

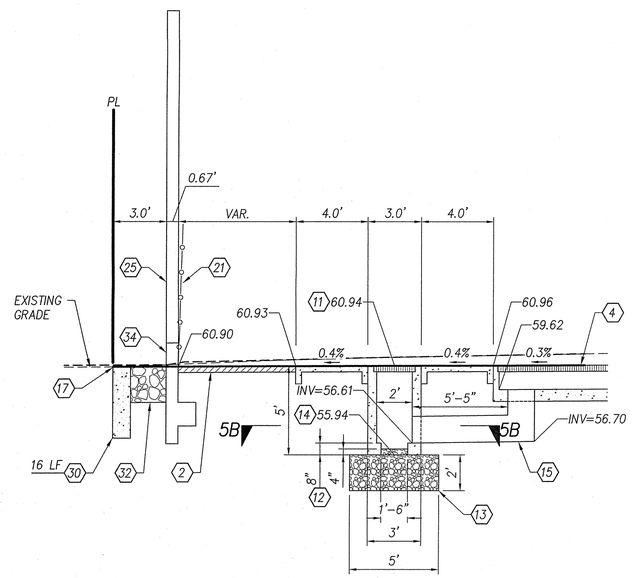

5A SECTION

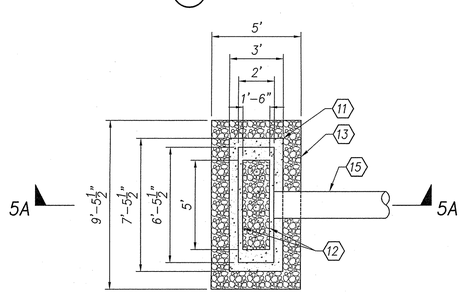

5B PLAN VIEW

5 BUBBLE UP AND WALL OPENING DETAIL
PAG SD 309 MODIFIED AS SHOWN NTS

KEY NOTES

2. PROPOSED 4" THICK LIME TREATED STABILIZED AGGREGATE BASE OVER SUBGRADE SCARIFIED TO 10" MINIMUM DEPTH AND COMPACTED TO 95% MINIMUM.
4. PROPOSED TRENCH DRAIN WITH 26" WIDE GRATE (BARRYCRAFT PART N B-H20G-H OR APPROVED EQUAL). SEE DETAIL 3 SHEET DP11 .
5. PROPOSED 10" WIDE GRATE DESIGNED FOR H-20 LOADING (BARRYCRAF PART NO. B-H20G-B OR APPROVED EQUAL).
6. PROPOSED 26" WIDE GRATE DESIGNED FOR H-20 LOADING (BARRYCRAF PART NO. B-H20G-H OR APPROVED EQUAL).
7. PROPOSED CONCRETE TRENCH DRAIN DESIGNED FOR H-20 LOADING, DESIGN BY STRUCTURAL CONCEPTS INC., NOT A PART OF THIS PLAN C PERMIT.
11. PROPOSED BUBBLE UP DRAINAGE STRUCTURE BASED ON CATCH BASIN (TYPE 4) AREA INLET WITH (2) EF-1 GRATES AND 4' WIDE CONCRETE APRON PER PAG SD 309 MODIFIED AS SHOWN.
12. PROPOSED 8" THICK CONCRETE FLOOR WITH 1.5' X 5' OPENING FOR DRAINAGE INFILTRATION, CENTERED IN FLOOR.
13. PROPOSED ROCK OR COBBLES (D_{50}=2").
14. PROPOSED FILTER FABRIC NON-WOVEN.
15. PROPOSED 18" DIA. HDPE PIPE WITH 90° BEND, LENGTHS AND INVERTS AS SHOWN IN DETAIL.
16. EXISTING 4' TALL CHAIN LINK FENCE TO REMAIN.
17. MATCH EXISTING GRADE ±.
21. REMOVE ENTIRE EXISTING PERIMETER CHAIN LINK FENCE AND GATES.
25. PROPOSED CMU SCREEN WALL (HEIGHT 10'-10" MAX ABOVE F.G.). SEE STRUCTURAL PLANS FOR DETAILS, NOT A PART OF THIS PLAN/PERMIT.
30. PROPOSED CONCRETE HEADER PER PAG SD 213, MODIFIED TO 12" WIDE X 24" DEEP.
32. PROPOSED 16' X 2' X 8" THICK RIPRAP APRON (D_{50}=4") OVER FILTER FABRIC.
34. PROPOSED (5) 8" X 16" WALL OPENINGS FOR DRAINAGE. SEE STRUCTURAL PLANS FOR DETAILS. NOT A PART OF THIS PLAN/PERMIT

NO.	DATE	REVISION	BY	CH	APPR

Call at least two full working days before you begin excavation.
ARIZONA 811
Arizona Blue Stake, Inc.
Dial 8-1-1 or 1-800-STAKE-IT (782-5348)
In Maricopa County: (602) 263-1100

Registered Professional Engineer (Civil)
CERTIFICATE NO. 10011
EDWIN BRUCE WILSON
Date Signed 11-29-2019
ARIZONA, U.S.A.
EXPIRES 12/31/2019

eec
civil engineering • land development
surveying • environmental services
staking • flood control and drainage
transportation
Engineering and Environmental Consultants, Inc.
555 E. River Road, Suite 301 | Tucson, Arizona 85704
Tel 520.321.4625 | Fax 520.321.0333

DP19-0201

AUGUST 2019
EEC JOB NO 204014.135

DEVELOPMENT PACKAGE
FOR
TEP TUCSON SUBSTATION

A PORTION OF BLOCK 54 OF CITY OF TUCSON, BK. 2 M&P, PG. 4
BEING A PORTION OF SECTION 12, T14S, R13E, G&SRM, CITY OF TUCSON, PIMA COUNTY, ARIZONA

COT ADMINISTRATIVE ADDRESS:
247 W. 4TH STREET
TUCSON, ARIZONA 85705

REVISIONS

DATE	ENG	TECH	REV
JULY 2019	M. JACKSON	D. GEERLIGS	00

DESCRIPTION:
JOB: 9788.00
WO: 6245721
TUCSON SUBSTATION

SCALE FACTOR: DATE
CONTRACTED BY: DATE
ENGINEERING TECH: DATE
PROJECT ENGINEER: DATE
ENGINEER APPROVAL: DATE

AUTOCADD

TEP Tucson Electric Power Company
TUCSON, ARIZONA

TITLE: SITE GRADING DETAIL SHEET TUCSON SUBSTATION

TRSQ T14S,R13E,S12,NE
REF # N/A
DWG # 0070-138-05-0011
REV 00 SHEET DP11

N:\204014.135 TEP Tucson Substation\950 CADD\955 DWG\DP\0070-138-05-0011.dwg Plotted: Oct 29, 2019 - 3:03pm btenor

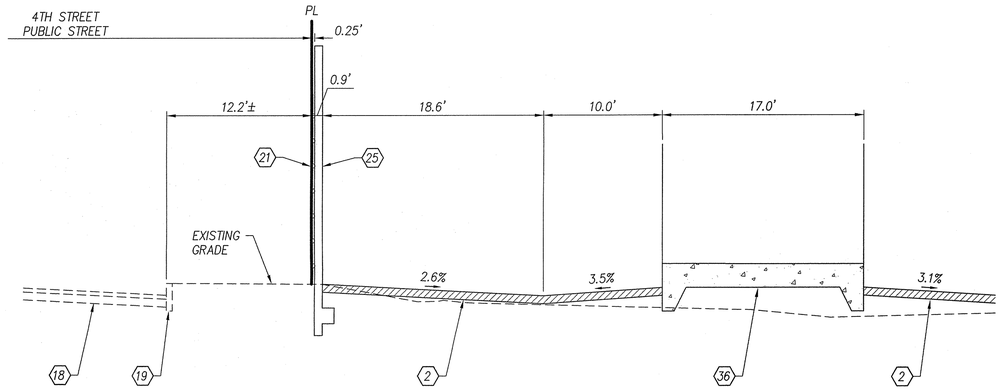

1 SECTION
NTS

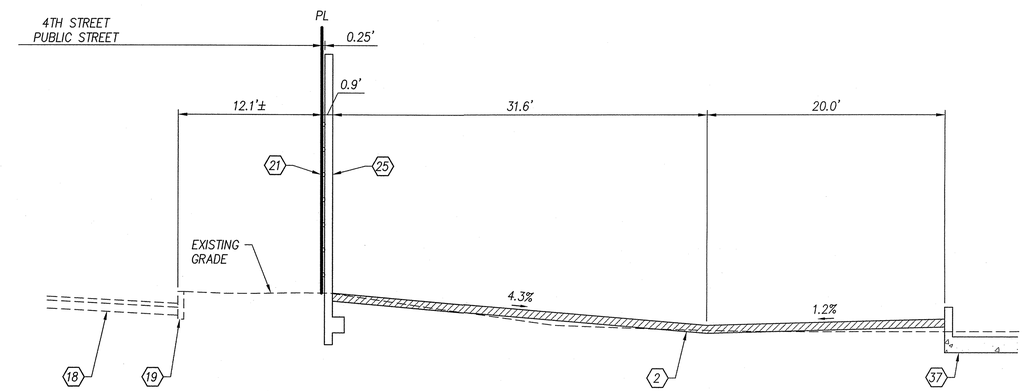

2 SECTION
NTS

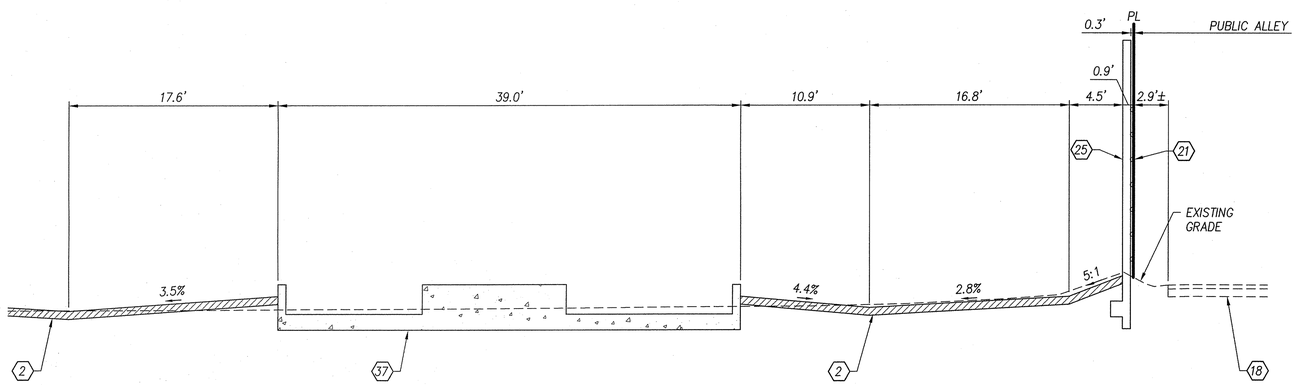

3 SECTION
NTS

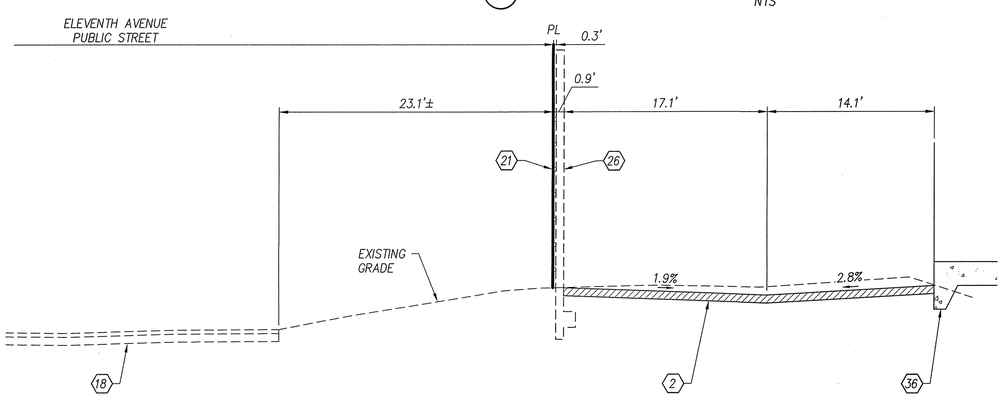

4 SECTION
NTS

KEY NOTES

2. PROPOSED 4" THICK LIME TREATED STABILIZED AGGREGATE BASE OVER SUBGRADE SCARIFIED TO 10" MINIMUM DEPTH AND COMPACTED TO 95% MINIMUM.
18. EXISTING PAVEMENT TO REMAIN.
19. EXISTING VERTICAL CURB TO REMAIN.
21. REMOVE ENTIRE EXISTING PERIMETER CHAIN LINK FENCE AND GATES.
25. PROPOSED CMU SCREEN WALL (HEIGHT 10'–10" MAX ABOVE F.G.). SEE STRUCTURAL PLANS FOR DETAILS, NOT A PART OF THIS PLAN/PERMIT.
26. PROPOSED 22' MANUAL ROLLING GATE. SEE STRUCTURAL PLANS FOR DETAILS, NOT A PART OF THIS PLAN/PERMIT.
36. PROPOSED CONTROL SHELTER, NOT A PART OF THIS PLAN/PERMIT.
37. PROPOSED TRANSFORMER AND OIL CONTAINMENT STRUCTURE, NOT A PART OF THIS PLAN/PERMIT.

NO.	DATE	REVISION	BY	CH	APPR

Call at least two full working days before you begin excavation.
ARIZONA 811
Arizona Blue Stake, Inc.
Dial 8-1-1 or 1-800-STAKE-IT (782-5348)
In Maricopa County: (602) 263-1100

Registered Professional Engineer (Civil)
CERTIFICATE NO. 10011
EDWIN BRUCE WILSON
Date Signed 10-30-2019
ARIZONA, U.S.A.
EXPIRES 12/31/2019

eec
Engineering and Environmental Consultants, Inc.
555 E. River Road, Suite 301 | Tucson, Arizona 85704
Tel 520.321.4625 | Fax 520.321.0333
civil engineering • land development
surveying • environmental services
staking • flood control and drainage
transportation

DP19–0201

AUGUST 2019
EEC JOB NO 204014.135

DEVELOPMENT PACKAGE
FOR
TEP TUCSON SUBSTATION

A PORTION OF BLOCK 54 OF CITY OF TUCSON,
BK. 2 M&P, PG. 4
BEING A PORTION OF SECTION 12, T14S, R13E, G&SRM,
CITY OF TUCSON, PIMA COUNTY, ARIZONA

COT ADMINISTRATIVE ADDRESS:
247 W. 4TH STREET
TUCSON, ARIZONA 85705

REVISIONS

DATE	ENG	TECH	REV
JULY 2019	M. JACKSON	D. GEERLIGS	00

DESCRIPTION:
JOB: 9788.00
WO: 6245721
TUCSON SUBSTATION

SCALE FACTOR:
CONTRACTOR ENG: DATE
ENGINEERING TECH: DATE
PROJECT ENGINEER: DATE
ENGINEER APPROVAL: DATE

AUTOCADD

Tucson Electric Power Company
TUCSON, ARIZONA

TITLE: SITE GRADING DETAIL SHEET TUCSON SUBSTATION

TRSQ T14S,R13E,S12,NE
REF # N/A
DWG # 0070-138-05-0012
REV 00
SHEET DP12

N:\204014.135 TEP Tucson Substation\950 CADD\955 DWG\DP\0070-138-05-0012.dwg Plotted: Oct 29, 2019 – 3:03pm blenor

TEP Tucson Substation Board of Adjustment Variance Application

3 Copies of Project Building Elevation

TUCSON SUBSTATION

C.M.U. SCREEN WALL - STRUCTURAL

CIVIL CONSTRUCTION PACKAGE

CONSTRUCTION \ MATERIALS WORK ORDER NO. 6248455

SHT.	DESCRIPTION	DWG. NUMBER
CVR	COVER SHEET, SITE AERIAL PHOTO & INDEX	0070-138-05-0013
S01	GENERAL STRUCTURAL NOTES AND ABBREVIATIONS	0070-138-05-0014
S02	PERIMETER WALL FOUNDATION PLAN	0070-138-05-0015
S03	PERIMETER WALL TYPE & DIMENSION PLAN	0070-138-05-0016
S04	PERIMETER WALL ELEVATIONS	0070-138-05-0017
S05	PERIMETER WALL SECTIONS	0070-138-05-0018
S06	PERIMETER WALL SECTIONS & DETAILS	0070-138-05-0019
S07	PERIMETER WALL SECTIONS & DETAILS	0070-138-05-0020
S08	PERIMETER WALL SECTIONS & DETAILS	0070-138-05-0021

THIS PROJECT

N

SITE AERIAL PHOTO

NO SCALE

COORDINATES: 32° 13' 48.66" N, 110° 58' 33.34" W

STRUCTURAL CONCEPTS INC.
CONSULTING ENGINEERS
8230 E. BROADWAY SUITE W-7
TUCSON, AZ 85710
(520) 721-2324 SCICE.COM

SCI No. 19-143S1 – 240 – 36X24

REVISIONS

DATE	ENG	TECH	REV
9/23/2019	M. JACKSON	D. ARMSTRONG	00

DESCRIPTION:
ISSUED FOR CONSTRUCTION
JOB 9820.00/W06245721
TUCSON SUBSTATION

55005 JENNIFER M. MCMAHON 10/8/19 ARIZONA, U.S.A.

AUTOCADD

Tucson Electric Power Company
TUCSON, ARIZONA

TITLE: SITE GRADING & STRUCTURAL
COVER SHEET
TUCSON SUBSTATION

TRSQ T14S,R13E,S12,NE
REF # N/A
DWG # 0070-138-05-0013
REV 00 SHEET CRV

ABBREVIATIONS

A.B.	ANCHOR BOLT	KO	KNOCKOUT (PANEL)
A.B.C.	AGGREGATE BASE COURSE	KSF	KIPS PER SQUARE FOOT
A.F.F.	ABOVE FINISH FLOOR	KSI	KIPS PER SQUARE INCH
ALT	ALTERNATE	L	LENGTH (DIMENSION)
ALUM	ALUMINUM	LBS OR #	POUNDS
APPROX	APPROXIMATE	L.F.	LINEAR FOOT
ARCH	ARCHITECTURAL	L.L.	LIVE LOAD
@	AT (MEASUREMENT)	LLH	LONG LEG HORIZONTAL
ATR	ALL THREAD ROD	LLV	LONG LEG VERTICAL
AZ	AZIMUTH	LONG	LONGITUDINAL
B.C.	BOTTOM CHORD	MATL	MATERIAL
B.F.F.	BELOW FINISH FLOOR	MAX	MAXIMUM
BIT	BITUMINOUS	M.B.	MACHINE BOLT
℄ OR B.L.	BUILDING LINE	M.C.J.	MASONRY CONTROL JOINT
BLDG	BUILDING	MECH	MECHANICAL
BLKG	BLOCKING	MFR(S)	MANUFACTURER(S)
BM	BEAM	MIN	MINIMUM
B.O.	BOTTOM OF	MIR	MIRROR
B.O.B.	BOTTOM OF BEAM	M.S.E.	MECHANICALLY STABILIZED EARTH
B.O.D.	BOTTOM OF DECK	MTL	METAL
B.O.F.	BOTTOM OF FOOTING	N/A	NOT APPLICABLE
BOTT	BOTTOM	N.I.C.	NOT IN CONTRACT
BRG	BEARING	N.S.	NEAR SIDE
BTWN	BETWEEN	N.T.S.	NOT TO SCALE
CF	CUBIC FOOT	(N)	NEW
C.I.P.	CAST-IN-PLACE	OA	OVERALL
C.J.	CONSTRUCTION (OR CONTROL) JOINT	O.C.	ON CENTER
℄	CENTERLINE	O.D.	OUTSIDE DIAMETER
CLR	CLEAR	O.F.	OUTSIDE FACE
COL	COLUMN	O.H.	OVERHANG
C.M.P.	CORRUGATED METAL PIPE	OPNG	OPENING
C.M.U.	CONCRETE MASONRY UNIT	OPP	OPPOSITE
CONC	CONCRETE	OWSJ	OPEN WEB STEEL JOIST
CONN	CONNECTION	P.C.	PRECAST CONCRETE
CONT	CONTINUOUS	PL	PLATE
COORD	COORDINATE	PLF	POUNDS PER LINEAR FOOT
CT.J.	CONTROL JOINT	PLWD	PLYWOOD
CTR	CENTER	PREFAB	PREFABRICATED
CY	CUBIC YARD	PSF	POUNDS PER SQUARE FOOT
D	DEPTH (DIMENSION)	PSI	POUNDS PER SQUARE INCH
DBL	DOUBLE	PVC	POLYVINYL CHLORIDE (PIPE)
DIA OR ϕ	DIAMETER	R	RADIUS
DIAPH	DIAPHRAGM	RCP	REINFORCED CONCRETE PIPE
D.L.	DEAD LOAD	REBAR	REINFORCING BAR
△	DEFLECTION	REF	REFERENCE
DN	DOWN	REINF	REINFORCING STEEL
DO	DITTO	REQD	REQUIRED
DTL	DETAIL	REV	REVISION
DWG(S)	DRAWING(S)	RS	ROUGH SAWN
E.F.	EACH FACE	R.T.U.	ROOF TOP UNIT (MECHANICAL)
E.J.	EXPANSION JOINT	——⇔	STEP IN FOOTING
EL	ELEVATION	SIM	SIMILAR
E.O.S.	EDGE OF SLAB	SPEC	SPECIFICATION
EQ	EQUAL	S.S.	STAINLESS STEEL
EQUIP	EQUIPMENT	STA	STATION
EW	EACH WAY	STD	STANDARD
EXCAV	EXCAVATE / EXCAVATION	STIFF	STIFFENER
EXP	EXPANSION	STL	STEEL
EXST	EXISTING	SQ	SQUARE
EXT	EXTERIOR	SYM	SYMMETRICAL
(E)	EXISTING	T&B	TOP & BOTTOM
F.F.E.	FINISH FLOOR ELEVATION	T&G	TONGUE & GROOVE
F.G.	FINISH GRADE	T.C.	TOP CHORD
FLR	FLOOR	T.L.	TOTAL LOAD
FND	FOUNDATION	THK	THICK(NESS)
F.O.	FACE OF	T.O.	TOP OF
F.W.	FACE OF WALL	T.O.B.	TOP OF BEAM
F.P.	FULL PENETRATION (WELD)	T.O.C.	TOP OF CONCRETE
FRMG	FRAMING	T.O.D.	TOP OF DECK
F.S.	FAR SIDE	T.O.F.	TOP OF FOOTING
FT	FOOT / FEET	T.O.L.	TOP OF LEDGER
FTG	FOOTING	T.O.M.	TOP OF MASONRY
F.V.	FIELD VERIFY	T.O.P.	TOP OF PLATE
GA	GAGE	T.O.S.	TOP OF STEEL
GALV	GALVANIZED	T.O.W.	TOP OF WALL
GLB	GLUED-LAMINATED BEAM	TRANS	TRANSVERSE
GSN	GENERAL STRUCTURAL NOTES	TYP	TYPICAL
H	HEIGHT (DIMENSION)	U.N.O.	UNLESS NOTED OTHERWISE
HGT	HEIGHT (DIMENSION)	V.I.F.	VERIFY IN FIELD
HK	HOOK	VERT	VERTICAL
HOR	HORIZONTAL	W	WIDTH (DIMENSION)
HSA	HEADED STUD ANCHOR	W/	WITH
HSS	HOLLOW STRUCTURAL STEEL	W/O	WITHOUT
I.D.	INSIDE DIAMETER	WD	WOOD
I.F.	INSIDE FACE	W.P.	WORK POINT
INT	INTERIOR	W.W.F.	WELDED WIRE FABRIC
JT	JOINT	W.S.CT.	WAINSCOT
K	KIP (1000 POUNDS)	W.S.EL	WATER SURFACE ELEVATION

GENERAL STRUCTURAL NOTES

(TYPICAL UNLESS NOTED OTHERWISE)

GENERAL

1. ALL WORK SHALL CONFORM TO THE REQUIREMENTS OF THE INTERNATIONAL BUILDING CODE (IBC), 2018 EDITION & APPLICABLE CITY OF TUCSON/PIMA COUNTY AMENDMENTS.

2. DESIGN LOADS:

   LATERAL LOADS
   WIND LOAD:
   IBC 2018/ASCE 7-16
   RISK CATEGORY I
   BASIC DESIGN WIND SPEED = 95 MPH
   EXPOSURE B

3. CONTRACTOR SHALL VERIFY ALL DIMENSIONS AND CONDITIONS AT THE JOB SITE PRIOR TO BEGINNING WORK AND SHALL REPORT ANY DISCREPANCIES TO THE CIVIL ENGINEER.

4. REFER TO SITE PLAN AND CIVIL DRAWINGS FOR LOCATION AND DETAILS OF SITE WORK ITEMS NOT SHOWN ON STRUCTURAL DRAWINGS.

5. OMISSIONS OR CONFLICTS BETWEEN VARIOUS ELEMENTS OF THE DRAWINGS, NOTES AND DETAILS SHALL BE BROUGHT TO THE ATTENTION OF THE ENGINEER AND RESOLVED BEFORE PROCEEDING WITH THE WORK.

6. DO NOT USE SCALED DIMENSIONS. USE WRITTEN DIMENSIONS OR WHERE NO DIMENSION IS PROVIDED, CONSULT THE CIVIL ENGINEER BEFORE PROCEEDING WITH THE WORK.

7. ESTABLISH AND VERIFY THE SIZE AND LOCATION OF ALL BLOCKOUTS, INSERTS, OPENINGS, CURBS, BASES AND PADS FOR CIVIL, MECHANICAL, ELECTRICAL AND PLUMBING WITH APPROPRIATE TRADE DRAWINGS AND SUBCONTRACTORS PRIOR TO CONSTRUCTION.

8. ALL DETAILS SHOWN APPLY WHETHER OR NOT SPECIFICALLY REFERENCED.

9. TYPICAL DETAILS ARE NOT CUT ON DRAWINGS, BUT APPLY UNLESS NOTED OTHERWISE. WHERE NO SPECIFIC DETAILS ARE SHOWN, CONSTRUCTION SHALL CONFORM TO SIMILAR WORK ON THE PROJECT.

10. OPTIONS, IF INDICATED, ARE FOR THE CONTRACTOR'S CONVENIENCE. THE CONTRACTOR SHALL BE RESPONSIBLE FOR ALL NECESSARY CHANGES IF HE CHOOSES AN OPTION AND SHALL COORDINATE ALL THE DETAILS.

11. ANY ENGINEERING DESIGN PROVIDED BY OTHERS AND SUBMITTED FOR REVIEW SHALL BEAR THE SEAL OF A STRUCTURAL ENGINEER REGISTERED IN ARIZONA.

12. THE CONTRACT STRUCTURAL DRAWINGS AND SPECIFICATIONS REPRESENT THE FINISHED STRUCTURE. THEY DO NOT INDICATE THE METHOD OF CONSTRUCTION. THE CONTRACTOR SHALL PROVIDE ALL NECESSARY MEASURES TO PROTECT THE STRUCTURE DURING CONSTRUCTION. SUCH MEASURES SHALL INCLUDE, BUT NOT BE LIMITED TO, BRACING AND SHORING OF LOADS DUE TO CONSTRUCTION EQUIPMENT, BACKFILL AND WIND.

FOUNDATION AND EARTHWORK

1. REFER TO GEOTECHNICAL ENGINEERING REPORT JOB NO. 63195036 DATED 09 APRIL 26, 2019 BY TERRACON CONSULTANTS, INC. FOR EARTHWORK REQUIREMENTS.

2. ALLOWABLE DESIGN SOIL BEARING PRESSURE = 1500 PSF AT 1'-6" DEPTH BELOW LOWEST ADJACENT GRADE.
   ACTIVE PRESSURE = 45 PCF UNRESTRAINED
   PASSIVE PRESSURE = 345 PCF
   FRICTION COEFF. = 0.45 W/O PASSIVE PRESSURE, 0.30 WITH PASSIVE PRESSURE

3. ALL BOTTOM-OF-FOOTING ELEVATIONS SHALL BE FOUNDED AT THE DEPTH INDICATED ON CONSTRUCTION DRAWINGS AND EXTEND 12" BEYOND THE END OF NON-CONTINUOUS WALLS.

4. ALL EARTH UNDER FOOTINGS SHALL BE COMPACTED TO 95% DENSITY IN ACCORDANCE WITH ASTM D698, METHOD D UNLESS NOTED OTHERWISE.

5. ALL EXCAVATIONS SHALL BE PROPERLY BACKFILLED. DO NOT BACKFILL BEHIND RETAINING WALLS BEFORE CONCRETE OR GROUT HAS ATTAINED FULL DESIGN STRENGTH.

CONCRETE

1. ALL CONCRETE SHALL BE READY MIXED CONFORMING TO ASTM C-94. TYPE II PORTLAND CEMENT SHALL BE USED FOR ALL CONCRETE. THE FOLLOWING MINIMUM STRENGTH AT 28 DAYS SHALL BE ATTAINED.

   FOUNDATIONS/PIERS/WALLS 5000 PSI

2. THE LATEST EDITIONS OF ACI STANDARDS OF RECOMMENDED PRACTICE SHALL APPLY TO ALL CONCRETE WORK.

3. ALL CONCRETE SHALL HAVE A MINIMUM CEMENT CONTENT OF 5 SACKS PER CUBIC YARD. SLUMP SHALL NOT BE MORE THAN 4 INCHES, PLUS OR MINUS 1 INCH FOR REGULAR MIX. ADMIXTURES MAY BE USED TO INCREASE SLUMP TO 8 INCHES MAX. ANY DEVIATIONS FROM THESE REQUIREMENTS SHALL BE MADE ONLY WITH THE APPROVAL OF THE ENGINEER.

4. CONCRETE SHALL NOT BE DROPPED MORE THAN FOUR FEET VERTICALLY.

5. CONCRETE FOOTINGS MAY BE POURED AGAINST NEAT EXCAVATIONS, PROVIDED PLAN DIMENSIONS ARE ADHERED TO.

6. ALL REINFORCING BARS, DOWELS, ANCHOR BOLTS, AND OTHER CONCRETE INSERTS SHALL BE SECURED IN POSITION PRIOR TO PLACING CONCRETE.

7. CONCRETE TESTING SHALL BE DONE IN CONFORMANCE WITH ACI-318 SECTION 5.6.

8. CONCRETE CURING SHALL BE PERFORMED IN CONFORMANCE WITH ACI-318 SECTION 5.11.

9. CONTRACTOR SHALL SUBMIT MIX DESIGNS WITH CORRESPONDING PRIOR TEST RESULTS FOR EACH MIX DESIGN. THE USE/LOCATIONS FOR EACH CONCRETE MIX DESIGN SHALL BE CLEARLY IDENTIFIED.

REINFORCING STEEL

1. REINFORCING STEEL SHALL CONFORM TO ASTM SPECIFICATION A615, GRADE 60 FOR ALL BARS.

2. UNLESS NOTED OTHERWISE ON THE DRAWINGS, THE MINIMUM CLEAR COVER FOR REINFORCEMENT SHALL BE AS FOLLOWS:

   CONCRETE CAST AGAINST EARTH - 3"

   CONCRETE TO BE IN CONTACT
   WITH EARTH OR WEATHER:
   BARS GREATER THAN #5 - 2"
   BARS #5 OR LESS - 1 1/2"

3. ALL REINFORCING STEEL SHALL BE ACCURATELY PLACED, ANCHORED AND SUPPORTED BY CHAIRS, SPACERS, POSITIONERS OR HANGERS.

4. PROVIDE BENT CORNER BARS TO MATCH AND LAP WITH HORIZONTAL BARS AT CORNERS AND INTERSECTIONS OF FOOTINGS, STEM WALLS, AND WALLS.

5. ALL REINFORCING IN CONCRETE SHALL BE CONTINUOUS OR LAPPED AS PER ACI 318. IF SPLICING OF THE BARS IS REQUIRED, NO MORE THAN 50 PERCENT OF THE BARS SHALL BE SPLICED AT ONE LOCATION. ALL BAR SPLICE LOCATIONS AND DETAILS ARE SUBJECT TO THE APPROVAL OF THE ENGINEER.

6. UNLESS NOTED OTHERWISE; LAP SPLICES IN CONCRETE BEAMS AND SLABS SHALL BE CLASS "B" TENSION LAP SPLICES PER LATEST EDITION OF ACI 318. STAGGER ALTERNATE SPLICES A MINIMUM OF ONE LAP LENGTH.

7. PROVIDE 48 BAR DIAMETER LAP SPLICES FOR TYPICAL REINFORCEMENT IN MASONRY. PROVIDE 63 BAR DIAMETER LAP SPLICES IF ADJACENT BARS ARE SEPARATED BY 3 INCHES OR LESS (THIS INCLUDES SPLICES FOR 2 BARS PER CELL IN 8 INCH MASONRY).

MASONRY

1. CONCRETE MASONRY UNITS SHALL BE HOLLOW, LOAD-BEARING CONFORMING TO ASTM C90, TYPE 1, GRADE N, WITH A MINIMUM 28-DAY NET COMPRESSIVE STRENGTH OF 2000 PSI.

2. MASONRY MORTAR SHALL CONFORM ASTM C 270 FOR TYPE S MORTAR WITH A MINIMUM 28-DAY GROSS COMPRESSIVE STRENGTH OF 1800 PSI. THICKNESS OF BED JOINTS SHALL NOT EXCEED 5/8 INCH.

3. MASONRY GROUT SHALL CONFORM TO ASTM C476 COARSE GROUT, WITH A MINIMUM 28-DAY COMPRESSIVE STRENGTH OF 2000 PSI. GROUT TESTING SHALL BE PERFORMED IN ACCORDANCE WITH ASTM C 1019. GROUT TESTING IS REQUIRED PRIOR TO CONSTRUCTION (OR DURING THE FIRST GROUT) AND FOR EVERY 5,000 SQUARE FEET OF WALL AREA DURING CONSTRUCTION.

4. MAXIMUM GROUT LIFT SHALL BE 5'-0".

5. PROVIDE A MINIMUM OF ONE BAR DIAMETER OF GROUT BETWEEN REINFORCING AND MASONRY UNITS.

6. ALL CELLS CONTAINING REINFORCEMENT SHALL BE GROUTED SOLID.

7. SOLID GROUT ALL MASONRY BELOW GRADE.

8. ALL GROUT SHALL BE CONSOLIDATED BY MECHANICAL VIBRATION (STINGER) IMMEDIATELY AFTER PLACEMENT, AND THEN, RECONSOLIDATED APPROXIMATELY 3 TO 5 MINUTES LATER.

9. ALL MASONRY SHALL BE REINFORCED WITH HORIZONTAL JOINT REINFORCEMENT AT 16" O.C. JOINT REINFORCEMENT SHALL BE LADDER TYPE AND CONSIST OF AT LEAST TWO LONGITUDINAL 9 GAGE DEFORMED RODS AND SHALL BE LAPPED A MINIMUM OF SIX INCHES AT SPLICES.

10. MASONRY SHALL BE REINFORCED WITH VERTICAL REINFORCEMENT AS NOTED IN DETAILS. REINFORCE ENDS OF WALL AND JAMBS WITH (2) #5 VERTICAL BARS, U.N.O.

11. PROVIDE 48 BAR DIAMETER LAP SPLICES FOR TYPICAL REINFORCEMENT. PROVIDE 63 BAR DIAMETER LAP SPLICES IF ADJACENT BARS ARE SEPARATED BY 3 INCHES OR LESS (THIS INCLUDES SPLICES FOR 2 BARS PER CELL IN 8 INCH MASONRY).

SECURITY BARRIER

1. PROVIDE STAINLESS STEEL, CONTINUOUS, 3D SECURITY BARRIER AT THE TOP OF PERIMETER SITE WALLS.

2. PRODUCT SHALL MEET OR EXCEED ULTRA BARRIER BY UNISEC INC. BARRIER SHALL BE:

   A. STAINLESS STEEL, TYPE 301, SUPER HARD, SHINY

   B. BARRIER SPIKES SHALL BE 2.64" LONG X 0.031 THICK, SPACED AT 3" O.C. EACH SIDE, AND SET AT APPROXIMATELY 25 DEGREES FROM VERTICAL

   C. BARRIER SHALL BE CONTINUOUS AT PERIMETER WALLS AND GATES, ATTACHED TO TOP OF GATE OR WALL AT 3" O.C., TYPICAL.

STATEMENT OF SPECIAL INSPECTION

THIS SPECIAL INSPECTION PROGRAM IS PROVIDED IN CONFORMANCE WITH IBC SECTIONS 1704 AND 1705 SPECIAL INSPECTION IS TO BE PROVIDED IN ADDITION TO THE INSPECTIONS CONDUCTED BY THE DEPARTMENT OF BUILDING SAFETY AND SHALL NOT BE CONSTRUED TO RELIEVE THE OWNER OR CONTRACTOR FROM REQUESTING THE INSPECTIONS REQUIRED BY IBC SECTION 110. THE SPECIAL INSPECTOR SHALL BE EMPLOYED BY THE OWNER, THE ENGINEER OF RECORD, OR AN AGENT OF THE OWNER, BUT NOT THE CONTRACTOR OR ANY OTHER PERSON RESPONSIBLE FOR THE WORK.

1. SPECIAL INSPECTION SHALL BE PROVIDED FOR THE FOLLOWING WORK:

   A. CONCRETE

   B. MASONRY

2. NAME OF SPECIAL INSPECTOR: FOR STRUCTURAL ITEMS ABOVE, THE SPECIAL INSPECTOR SHALL BE, OR WORK UNDER THE DIRECT SUPERVISION OF, THE STRUCTURAL ENGINEER OF RECORD - STRUCTURAL CONCEPTS INC., PHONE NO. (520) 721-2324. THE OWNER, AT HIS OPTION, MAY DESIGNATE AN ALTERNATE SPECIAL INSPECTOR, OBTAIN THE REQUIRED CERTIFICATE(S), AND MAKE THE NECESSARY NOTIFICATIONS TO ALL PARTIES INVOLVED. ALTERNATE SPECIAL INSPECTOR SHALL BE A LICENSED STRUCTURAL ENGINEER OR AN ICC CERTIFIED SPECIAL INSPECTOR.

3. DUTIES OF SPECIAL INSPECTOR: OBSERVE FIELD CONDITIONS FOR CONFORMANCE WITH CONSTRUCTION DOCUMENTS. ALL DISCREPANCIES SHALL BE BROUGHT TO THE IMMEDIATE ATTENTION OF THE CONTRACTOR FOR CORRECTION, AND IF UNCORRECTED, BROUGHT TO THE ATTENTION OF THE ENGINEER OF RECORD AND THE BUILDING OFFICIAL. PREPARE FIELD REPORTS DAILY. FIELD REPORTS SHALL INDICATE, AS A MINIMUM, THE DATE, THE PORTION OF THE WORK THAT WAS INSPECTED, AND ANY UNCORRECTED DISCREPANCIES. UPON COMPLETION OF THE WORK, THE SPECIAL INSPECTION CERTIFICATE SHALL BE COMPLETED AND SEALED BY THE SUPERVISING ENGINEER AND SUBMITTED TO THE BUILDING OFFICIAL ALONG WITH COPIES OF THE FIELD REPORTS.

4. THE CONTRACTOR SHALL BE RESPONSIBLE FOR CONTACTING THE SPECIAL INSPECTOR AT LEAST ONE WORKING DAY IN ADVANCE TO SCHEDULE ANY SPECIAL INSPECTION.

STRUCTURAL CONCEPTS INC.
CONSULTING ENGINEERS
8230 E. BROADWAY SUITE W-7
TUCSON, AZ 85710
(520) 721-2324 SCICE.COM

SCI No. 19-143S2 - 240 - 36X24

SHT.	DESCRIPTION	DWG. NUMBER
CVR	COVER SHEET, SITE AERIAL PHOTO & INDEX	0070-138-05-0013
S02	PERIMETER WALL FOUNDATION PLAN	0070-138-05-0015
S03	PERIMETER WALL TYPE & DIMENSION PLAN	0070-138-05-0016
S04	PERIMETER WALL ELEVATIONS	0070-138-05-0017
S05	PERIMETER WALL SECTIONS	0070-138-05-0018
S06	PERIMETER WALL SECTIONS & DETAILS	0070-138-05-0019
S07	PERIMETER WALL SECTIONS & DETAILS	0070-138-05-0020
S08	PERIMETER WALL SECTIONS & DETAILS	0070-138-05-0021

REVISIONS

DATE	ENG	TECH	REV
9/23/2019	M. JACKSON	D. ARMSTRONG	00

DESCRIPTION:
ISSUED FOR CONSTRUCTION
JOB 9820.00/W06245721
TUCSON SUBSTATION

Registered Professional Engineer (Civil) CERTIFICATE NO. 55005 JENNIFER M. MCMAHON Date Signed 10/8/19 ARIZONA U.S.A.

AUTOCADD

Tucson Electric Power Company
TUCSON, ARIZONA

TITLE: SITE GRADING & STRUCTURAL
GENERAL STRUCTURAL NOTES & ABBREVIATIONS
TUCSON SUBSTATION

TRSQ T14S,R13E,S12,NE
REF # N/A
DWG # 0070-138-05-0014
REV 00 SHEET S01

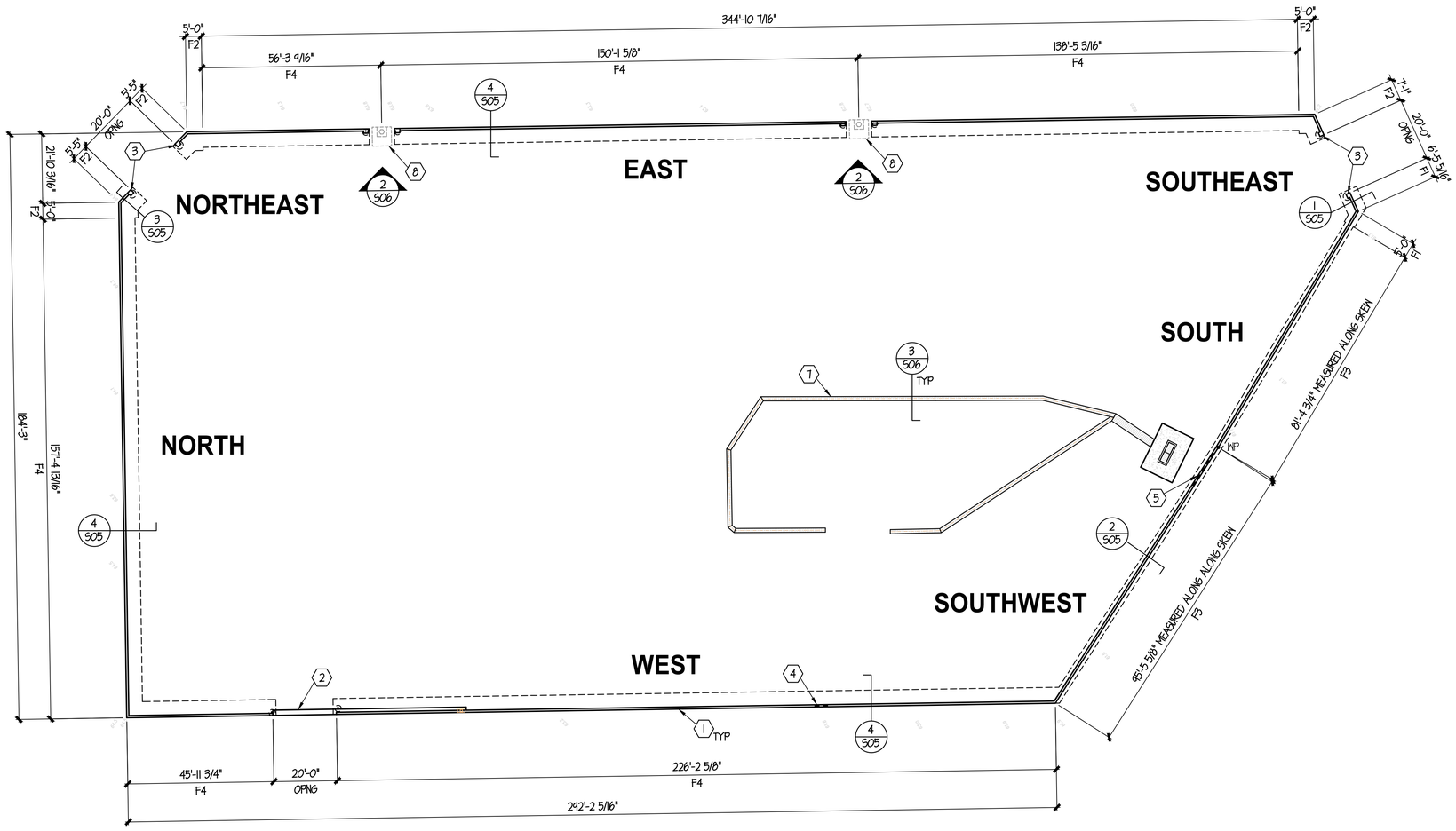

PLAN NOTES

1. VERIFY ALL DIMENSIONS & ELEVATIONS WITH CIVIL DRAWINGS AND A SITE SURVEY PRIOR TO START OF WORK. RESOLVE ANY DISCREPANCY WITH CIVIL ENGINEER.
2. PLAN DIMENSIONS SHOWN INDICATE THE LENGTH OF WALL WITH THE APPROPRIATE FOOTING SIZES TO BE USED. THE CONTRACTOR SHALL COORDINATE DIMENSIONS WITH CIVIL PLANS AND ADJUST IF REQUIRED.
3. FOR SPACING OF C.M.U. WALL CONSTRUCTION AND EXPANSIONS JOINTS, SEE GSN, ELEVATIONS AND STRUCTURAL DETAILS.
4. LENGTHS OF C.M.U. WALLS ARE DICTATED BY PROPERTY LINES, EXISTING CONDITIONS, AND SUBSTATION LAYOUT. OVERALL LENGTHS ARE NOT BOND. WHERE FEASIBLE, PROVIDE SEGMENTS OF WALLS TO BOND DIMENSIONS. SEE ELEVATIONS.

KEYNOTES

1. NEW C.M.U. SITE WALL
2. NEW ROLLING GATE APRON - SEE DETAILS & T.E.P. STANDARD DETAILS FOR ROLLING GATE
3. NEW SWING GATE - PROVIDE CONCRETE PIER EACH SIDE. SEE DETAILS & T.E.P. STANDARD SWING GATE DETAILS
4. PROVIDE A TOTAL OF 2 WEEP HOLES - LOCATE AND PLACE BOND AS SPECIFIED IN CIVIL DRAWINGS & SEE, 9/S07
5. PROVIDE A TOTAL OF 5 WEEP HOLES - LOCATE AND PLACE BOND AS SPECIFIED IN CIVIL DRAWINGS & SEE, 9/S07
6. C.M.U. PIERS ON DRILLED SHAFT FOUNDATIONS EACH SIDE OF EXST ELECTRICAL POLES. VERIFY EXTENT OF ELECTRICAL POLE FOUNDATION PRIOR TO LOCATING AND DRILLING FOR NEW FOUNDATIONS. MAINTAIN MINIMUM 1'-0" CLEAR BETWEEN FACE OF EXISTING FOUNDATION AND NEW DRILLED SHAFTS. SEE SECTION AND ELEVATION SHEET S06
7. TRENCH DRAIN WITH GRATING, REFER TO CIVIL DRAWINGS
8. EXISTING ELECTRICAL POLE, FOUNDATION AND SLAB

FOOTING SCHEDULE

MARK	SIZE	REINFORCEMENT	TOP OF FTG (T.O.F.) ELEVATION U.N.O.	REMARKS
F1	3'-8" CONT X 1'-0" DEEP	#5 @ 16" O.C. TRANS BARS 4 - #5 BOTT BARS, CONT	SEE DETAILS, ELEVATIONS AND COORDINATE WITH CIVIL DWGS	CONCENTRIC FOOTING
F2	6'-0" CONT X 1'-0" DEEP	#5 @ 16" O.C. TRANS BARS 6 - #5 BOTT BARS, CONT	SEE DETAILS, ELEVATIONS AND COORDINATE WITH CIVIL DWGS	ECCENTRIC FOOTING
F3	2'-10" CONT X 1'-0" DEEP	#5 @ 16" O.C. TRANS BARS 4 - #5 BOTT BARS, CONT	SEE DETAILS, ELEVATIONS AND COORDINATE WITH CIVIL DWGS	CONCENTRIC FOOTING
F4	5'-0" CONT X 1'-0" DEEP	#5 @ 16" O.C. TRANS BARS 5 - #5 BOTT BARS, CONT	SEE DETAILS, ELEVATIONS AND COORDINATE WITH CIVIL DWGS	ECCENTRIC FOOTING

STRUCTURAL CONCEPTS INC.
CONSULTING ENGINEERS
8230 E. BROADWAY SUITE W-7
TUCSON, AZ 85710
(520) 721-2324 SCICE.COM

FOUNDATION PLAN

SCALE 1" = 20'-0"

SCI No. 19-143S3 - 240 - 36X24

SHT.	DESCRIPTION	DWG. NUMBER
CVR	COVER SHEET, SITE AERIAL PHOTO & INDEX	0070-138-05-0013
S01	GENERAL STRUCTURAL NOTES AND ABBREVIATIONS	0070-138-05-0014
S03	PERIMETER WALL TYPE & DIMENSION PLAN	0070-138-05-0016
S04	PERIMETER WALL ELEVATIONS	0070-138-05-0017
S05	PERIMETER WALL SECTIONS	0070-138-05-0018
S06	PERIMETER WALL SECTIONS & DETAILS	0070-138-05-0019
S07	PERIMETER WALL SECTIONS & DETAILS	0070-138-05-0020
S08	PERIMETER WALL SECTIONS & DETAILS	0070-138-05-0021

REVISIONS

DATE	ENG	TECH	REV
9/23/2019	M. JACKSON	D. ARMSTRONG	00

DESCRIPTION:
ISSUED FOR CONSTRUCTION
JOB 9820.00/W06245721
TUCSON SUBSTATION

Registered Professional Engineer (Civil) CERTIFICATE NO. 55005 JENNIFER M. MCMAHON Date Signed 10/8/19 ARIZONA, U.S.A.

AUTOCADD

Tucson Electric Power Company
TUCSON, ARIZONA

TITLE: SITE GRADING & STRUCTURAL PERIMETER WALL FOUNDATION PLAN
TUCSON SUBSTATION

TRSQ T14S,R13E,S12,NE
REF # N/A
DWG # 0070-138-05-0015
REV 00 SHEET S02

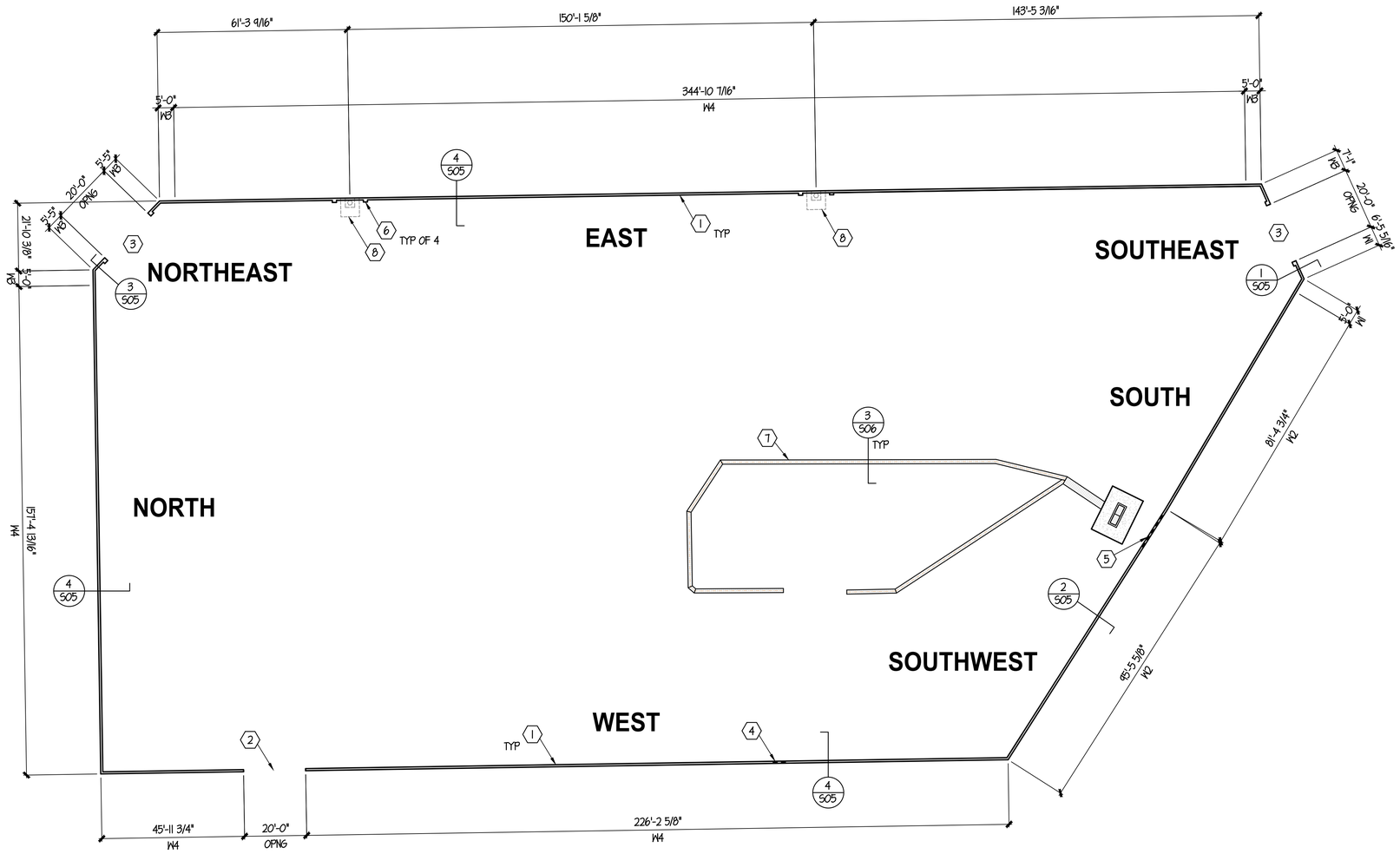

PLAN NOTES

1. VERIFY ALL DIMENSIONS & ELEVATIONS WITH CIVIL DRAWINGS AND A SITE SURVEY PRIOR TO START OF WORK. RESOLVE ANY DISCREPANCY WITH CIVIL ENGINEER.
2. FOR SPACING OF C.M.U. WALL CONSTRUCTION AND EXPANSIONS JOINTS, SEE GSN, ELEVATIONS AND STRUCTURAL DETAILS.
3. LENGTHS OF C.M.U. WALLS ARE DICTATED BY PROPERTY LINES, EXISTING CONDITIONS, AND SUBSTATION LAYOUT. OVERALL LENGTHS ARE NOT BOND. WHERE FEASIBLE, PROVIDE SEGMENTS OF WALLS TO BOND DIMENSIONS. SEE ELEVATIONS.

KEYNOTES

1. NEW C.M.U. SITE WALL
2. NEW ROLLING GATE OPENING - SEE DETAILS & T.E.P. STANDARD DETAILS FOR ROLLING GATE
3. NEW SWING GATE OPENING - SEE DETAILS & T.E.P. STANDARD SWING GATE DETAILS
4. PROVIDE A TOTAL OF 2 WEEP HOLES - LOCATE AND PLACE BOND AS SPECIFIED IN CIVIL DRAWINGS & SEE, 9/S07
5. PROVIDE A TOTAL OF 5 WEEP HOLES - LOCATE AND PLACE BOND AS SPECIFIED IN CIVIL DRAWINGS & SEE, 9/S07
6. C.M.U. PIERS ON DRILLED SHAFT FOUNDATIONS EACH SIDE OF EXST ELECTRICAL POLES. VERIFY EXTENT OF ELECTRICAL POLE FOUNDATION PRIOR TO LOCATION AND DRILLING FOR NEW FOUNDATIONS. MAINTAIN MINIMUM 1'-0" CLEAR BETWEEN FACE OF EXISTING FOUNDATION AND NEW DRILLED SHAFTS. SEE SECTION AND ELEVATION SHEET S06
7. TRENCH DRAIN WITH GRATING, REFER TO CIVIL DRAWINGS
8. EXISTING ELECTRICAL POLE, FOUNDATION AND SLAB

N

SHT.	DESCRIPTION	DWG. NUMBER
CVR	COVER SHEET, SITE AERIAL PHOTO & INDEX	0070-138-05-0013
S01	GENERAL STRUCTURAL NOTES AND ABBREVIATIONS	0070-138-05-0014
S02	PERIMETER WALL FOUNDATION PLAN	0070-138-05-0015
S04	PERIMETER WALL ELEVATIONS	0070-138-05-0017
S05	PERIMETER WALL SECTIONS	0070-138-05-0018
S06	PERIMETER WALL SECTIONS & DETAILS	0070-138-05-0019
S07	PERIMETER WALL SECTIONS & DETAILS	0070-138-05-0020
S08	PERIMETER WALL SECTIONS & DETAILS	0070-138-05-0021

STRUCTURAL CONCEPTS INC.
CONSULTING ENGINEERS
8230 E. BROADWAY SUITE W-7
TUCSON, AZ 85710
(520) 721-2324 SCICE.COM

WALL TYPE & DIMENSION PLAN

SCALE 1" = 20'-0"

SCI No. 19-143S4 - 240 - 36X24

REVISIONS

DATE	ENG	TECH	REV
9/23/2019	M. JACKSON	D. ARMSTRONG	00

DESCRIPTION:
ISSUED FOR CONSTRUCTION
JOB 9820.00/W06245721
TUCSON SUBSTATION

Registered Professional Engineer (Structural)
55005
JENNIFER M. MCMAHON
Date Signed 10/8/19
ARIZONA, U.S.A.

AUTOCADD

Tucson Electric Power Company
TUCSON, ARIZONA

TITLE: SITE GRADING & STRUCTURAL
PERIMETER WALL TYPE & DIMENSION PLAN
TUCSON SUBSTATION

TRSQ T14S,R13E,S12,NE
REF # N/A
DWG # 0070-138-05-0016
REV 00 SHEET S03

SHEET NOT USED - FOR PERMIT SET

NOTE
PERIMETER WALL ELEVATIONS ARE NOT SHOWN HERE. WALL ELEVATIONS SHALL BE PROVIDED TO THE CONTRACTOR FOR REFERENCE ONLY IN THE FINAL CONSTRUCTION DRAWING SET.

SHT.	DESCRIPTION	DWG. NUMBER
CVR	COVER SHEET, SITE AERIAL PHOTO & INDEX	0070-138-05-0013
S01	GENERAL STRUCTURAL NOTES AND ABBREVIATIONS	0070-138-05-0014
S02	PERIMETER WALL FOUNDATION PLAN	0070-138-05-0015
S03	PERIMETER WALL TYPE & DIMENSION PLAN	0070-138-05-0016
S05	PERIMETER WALL SECTIONS	0070-138-05-0018
S06	PERIMETER WALL SECTIONS & DETAILS	0070-138-05-0019
S07	PERIMETER WALL SECTIONS & DETAILS	0070-138-05-0020
S08	PERIMETER WALL SECTIONS & DETAILS	0070-138-05-0021

STRUCTURAL CONCEPTS INC.
CONSULTING ENGINEERS
8230 E. BROADWAY SUITE W-7
TUCSON, AZ 85710
(520) 721-2324 SCICE.COM

SCI No. 19-143S5 – 240 – 36X24

REVISIONS

DATE	ENG	TECH	REV
9/23/2019	M. JACKSON	D. ARMSTRONG	00

DESCRIPTION:
ISSUED FOR CONSTRUCTION
JOB 9820.00/W06245721
TUCSON SUBSTATION

Registered Professional Engineer (Civil)
55005
JENNIFER M. MCMAHON
Date Signed 10/8/19
ARIZONA, U.S.A.

AUTOCADD

Tucson Electric Power Company
TUCSON, ARIZONA

TITLE: SITE GRADING & STRUCTURAL
PERIMETER WALL ELEVATIONS
TUCSON SUBSTATION

TRSQ T14S,R13E,S12,NE
REF # N/A
DWG # 0070-138-05-0017
REV 00 SHEET S04

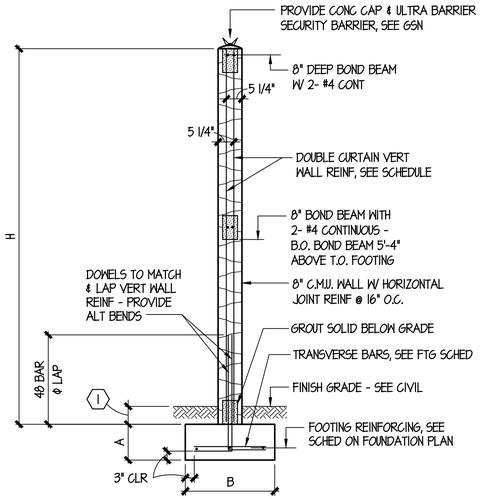

KEYNOTES

1. TOP OF FOOTING SHALL BE 6" MINIMUM BELOW GRADE.

DOUBLE CURTAIN 8" C.M.U. SCREEN WALL SCHEDULE				
MARK	H	A & B	WALL REINF	FOOTING REINF
W-1	11'-4" MAX	SEE FTG SCHED	2- #5 @ 32"	SEE FTG SCHED

C.M.U. SCREEN WALL - DOUBLE CURTAIN (1)

SCALE 1/2" = 1'-0" 1914356

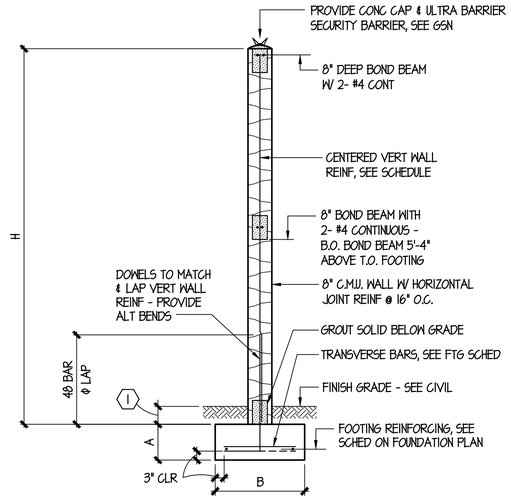

KEYNOTES

1. TOP OF FOOTING SHALL BE 6" MINIMUM BELOW GRADE.

NOTE
BOND BEAM AT DRAIN OPNGS NOT SHOWN - SEE 11/S06

SINGLE CURTAIN 8" C.M.U. SCREEN WALL SCHEDULE				
MARK	H	A & B	WALL REINF	FOOTING REINF
W-2	11'-4" MAX	SEE FTG SCHED	#5 @ 40"	SEE FTG SCHED

C.M.U. SCREEN WALL - SINGLE CURTAIN (2)

SCALE 1/2" = 1'-0" 1914356

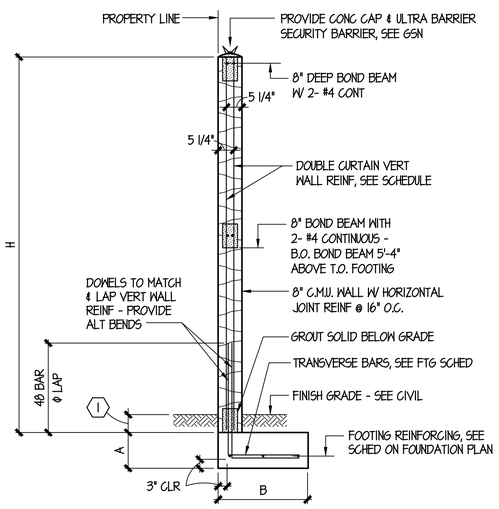

KEYNOTES

1. TOP OF FOOTING SHALL BE 6" MINIMUM BELOW GRADE.

DOUBLE CURTAIN 8" C.M.U. SCREEN WALL SCHEDULE				
MARK	H	A & B	WALL REINF	FOOTING REINF
W3	11'-4" MAX	SEE FTG SCHED	2- #5 @ 32"	SEE FTG SCHED

C.M.U. SCREEN WALL AT PROPERTY LINE - DOUBLE CURTAIN (3)

SCALE 1/2" = 1'-0" 1914356

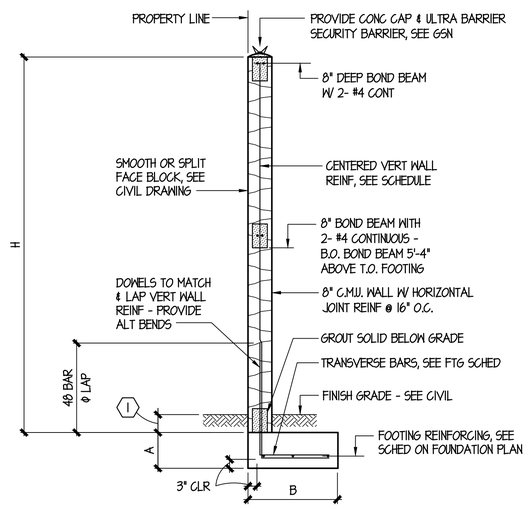

KEYNOTES

1. TOP OF FOOTING SHALL BE 6" MINIMUM BELOW GRADE.

NOTE
BOND BEAM AT DRAIN OPNGS NOT SHOWN - SEE 11/S06

SINGLE CURTAIN 8" C.M.U. SCREEN WALL SCHEDULE				
MARK	H	A & B	WALL REINF	FOOTING REINF
W4	11'-4" MAX	SEE FTG SCHED	#5 @ 40"	SEE FTG SCHED

C.M.U. SCREEN WALL AT PROPERTY LINE - SINGLE CURTAIN (4)

SCALE 1/2" = 1'-0" 1914356

STRUCTURAL CONCEPTS INC.
CONSULTING ENGINEERS
8230 E. BROADWAY SUITE W-7
TUCSON, AZ 85710
(520) 721-2324 SCICE.COM

SCI No. 19-143S6 – 240 – 36X24

SHT.	DESCRIPTION	DWG. NUMBER
CVR	COVER SHEET, SITE AERIAL PHOTO & INDEX	0070-138-05-0013
S01	GENERAL STRUCTURAL NOTES AND ABBREVIATIONS	0070-138-05-0014
S02	PERIMETER WALL FOUNDATION PLAN	0070-138-05-0015
S03	PERIMETER WALL TYPE & DIMENSION PLAN	0070-138-05-0016
S05	PERIMETER WALL SECTIONS	0070-138-05-0018
S06	PERIMETER WALL SECTIONS & DETAILS	0070-138-05-0019
S07	PERIMETER WALL SECTIONS & DETAILS	0070-138-05-0020
S08	PERIMETER WALL SECTIONS & DETAILS	0070-138-05-0021

REVISIONS

DATE	ENG	TECH	REV
8/23/2019	M. JACKSON	D. ARMSTRONG	00

DESCRIPTION:
ISSUED FOR CONSTRUCTION
JOB 9820.00/W06245721
TUCSON SUBSTATION

Registered Professional Engineer (Civil)
CERTIFICATE NO. 55005
JENNIFER M. MCMAHON
Date Signed 10/8/19
ARIZONA, U.S.A.

AUTOCADD

Tucson Electric Power Company
TUCSON, ARIZONA

TITLE: SITE GRADING & STRUCTURAL PERIMETER WALL SECTIONS TUCSON SUBSTATION

TRSQ: T14S,R13E,S12,NE
REF #: N/A
DWG #: 0070-138-05-0018
REV: 00
SHEET: SO5

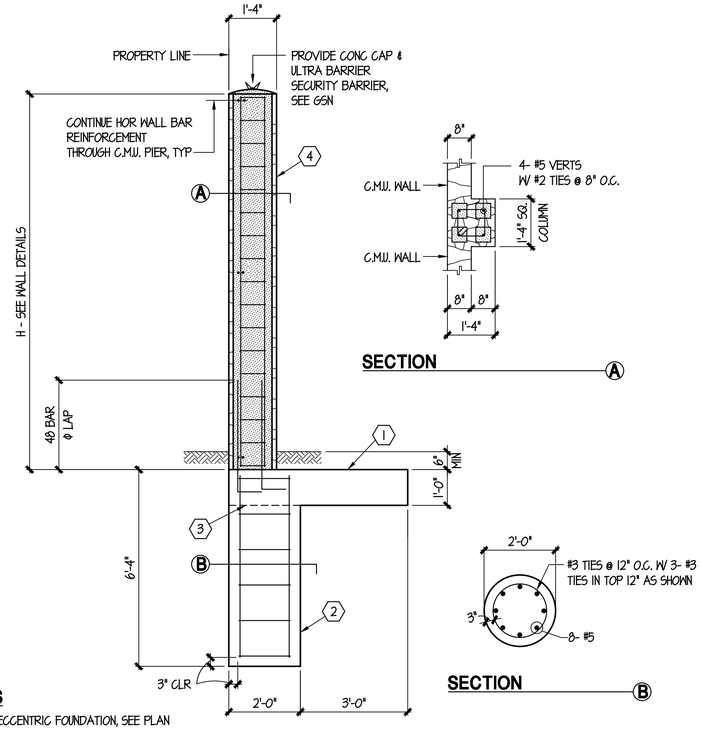

KEYNOTES

1. SITE WALL ECCENTRIC FOUNDATION, SEE PLAN
2. DRILLED SHAFT FOUNDATION
3. ECCENTRIC FOOTING SHALL EXTEND OVER DRILLED SHAFT. EMBED SHAFT CAGE 10" INTO FOOTING.
4. 1'-4" SQUARE MASONRY COLUMN INTEGRAL WITH WALL

16" SQUARE C.M.U. PIER & DRILLED SHAFT

SCALE 1/2" = 1'-0" 1914357 (1)

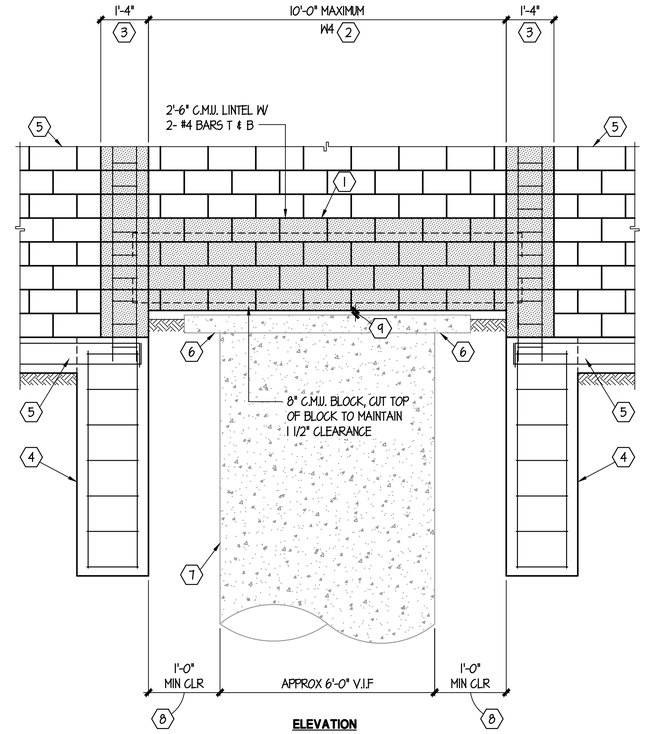

KEYNOTES

1. 2'-6" MIN DEEP C.M.U. LINTEL W/ 2- #4 TOP & BOTT. BEND HORIZONTAL BARS INTO C.M.U. PIERS EACH SIDE. ADJUST DEPTH OF BOTTOM COURSE OF LINTEL AS REQUIRED TO MAINTAIN CONSISTENT COURSING WITH ADJACENT WALLS.
2. PROVIDE VERTICAL REINFORCEMENT FROM BOTTOM OF LINTEL TO TOP OF WALL. SEE SCREEN WALL SECTIONS SHEET S05.
3. C.M.U. PIER EACH SIDE OF ADJACENT EXST POLE. SEE 1/- FOR COLUMN DETAIL.
4. DRILLED SHAFT FOUNDATION SEE DETAIL 1/-
5. REFER TO PLANS FOR FOOTINGS AND SCREEN WALL DESIGNATIONS ADJACENT
6. EXISTING SLAB-ON-GRADE AT BASE OF EXISTING ELECTRICAL POLE. VERIFY OVERALL DIMENSIONS IN FIELD.
7. EXISTING ELECTRICAL POLE DRILLED SHAFT FOUNDATION. ACTUAL FOUNDATION NOT KNOWN. ASSUMED 6'-0" Φ V.I.F. DO NOT DISTURB EXST FOUNDATION DURING CONSTRUCTION.
8. MAINTAIN MINIMUM 1'-0" CLEAR FROM EXST POLE FOUNDATION. LOCATE NEW DRILLED SHAFTS TO AVOID EXST SLAB-ON-GRADE.
9. MINIMIZE GAP BELOW LINTEL 1 1/2" MAX CLEAR TO TOP OF GRADE (OR SLAB). GAPS GREATER THAN 1 1/2" MAY REQUIRE INSTALLATION OF SECURITY FRAMING. WALL SHALL NOT BEAR ON EXST ELECTRICAL POLE SLAB OR FOUNDATION.

NOTES

1. FIELD VERIFY DIMENSIONS AND LOCATIONS OF SLABS AND FOUNDATIONS FOR EXST ELECTRICAL POLES.
2. LOCATE C.M.U. PIERS AS REQUIRED TO MAINTAIN BOND DIMENSIONS AND MAINTAIN MINIMUM 1'-0" CLEAR TO ELECTRICAL POLES.
3. C.M.U. WALLS AND FOUNDATIONS SHALL NOT BEAR ON EXST ELECTRICAL POLE SLAB OR FOUNDATION, EXCEPT AS REQUIRED TO TEMPORARILY FORM OR SUPPORT FORM WORK FOR CONCRETE AND MASONRY CONSTRUCTION.

C.M.U. PIER FOUNDATION AT EXST POLE

SCALE 1/2" = 1'-0" 1914357 (2)

KEYNOTE

1. DEPTH VARIES (6" MAX) SEE CIVIL DRAWINGS FOR INVERT & SLOPES

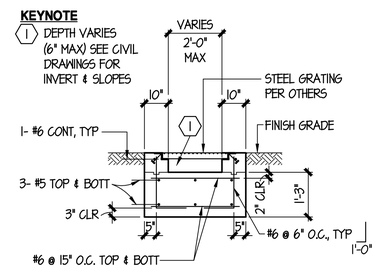

CAST-IN-PLACE TRENCH DRAIN

NO SCALE 1914357 (3)

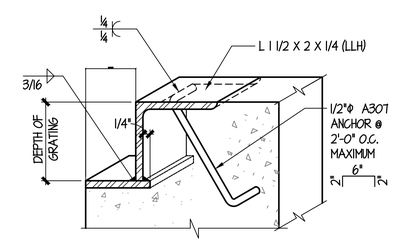

NOTES

1. FOR GRATING SEE GENERAL STRUCTURAL NOTES
2. REBATE TO BE CONTINUOUS ALONG EACH SIDE OF CONCRETE TRENCH
3. ANGLE AND BEARING PLATE SHALL BE 1/4" THICK MINIMUM

GRATING REBATE

NO SCALE 1914357 (4)

SHT.	DESCRIPTION	DWG. NUMBER
CVR	COVER SHEET, SITE AERIAL PHOTO & INDEX	0070-138-05-0013
S01	GENERAL STRUCTURAL NOTES AND ABBREVIATIONS	0070-138-05-0014
S02	PERIMETER WALL FOUNDATION PLAN	0070-138-05-0015
S03	PERIMETER WALL TYPE & DIMENSION PLAN	0070-138-05-0016
S04	PERIMETER WALL ELEVATIONS	0070-138-05-0017
S05	PERIMETER WALL SECTIONS	0070-138-05-0018
S07	PERIMETER WALL SECTIONS & DETAILS	0070-138-05-0020
S08	PERIMETER WALL SECTIONS & DETAILS	0070-138-05-0021

STRUCTURAL CONCEPTS INC.
CONSULTING ENGINEERS
8230 E. BROADWAY SUITE W-7
TUCSON, AZ 85710
(520) 721-2324 SCICE.COM

SCI No. 19-143S7 - 240 - 36X24

REVISIONS

DATE	ENG	TECH	REV
9/23/2019	M. JACKSON	D. ARMSTRONG	00

DESCRIPTION: ISSUED FOR CONSTRUCTION
JOB 9820.00/W06245721
TUCSON SUBSTATION

AUTOCADD

Tucson Electric Power Company
TUCSON, ARIZONA

TITLE: SITE GRADING & STRUCTURAL PERIMETER WALL SECTIONS & DETAILS TUCSON SUBSTATION

TRSQ T14S,R13E,S12,NE
REF # N/A
DWG # 0070-138-05-0019
REV 00 SHEET S06

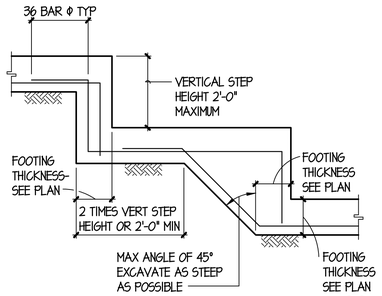

TYP STEPPED FOOTING (1)

SCALE 1/2" = 1'-0" — F1030-TR

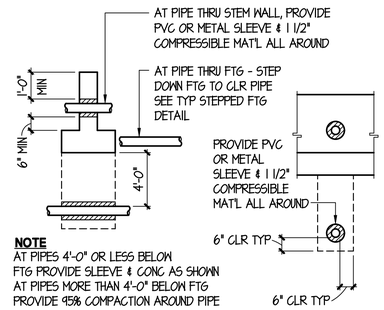

TYPICAL UTILITY PIPE AT FOOTING (2)

NO SCALE — F1050-TR

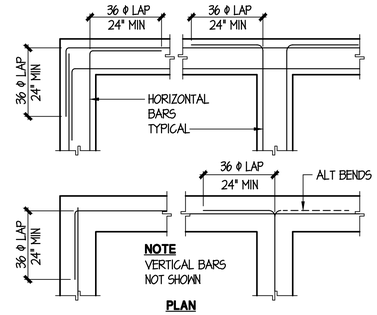

TYP REINF AT CONCRETE JUNCTION (3)

SCALE 1/2" = 1'-0" — F1100-TR

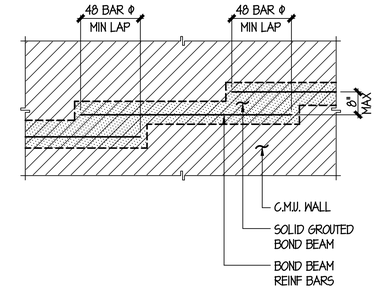

TYPICAL STEPPED C.M.U. BOND BEAM (4)

NO SCALE — M1200-TR

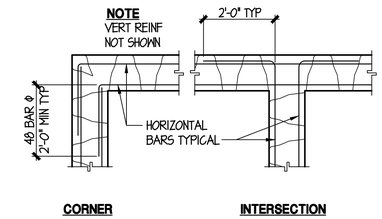

TYP REINF AT MASONRY JUNCTION (5)

SCALE 1/2" = 1'-0" — RM5050-TR

NOTE
MAX M.C.J. SPACING = 33'-4" - SEE WALL ELEVATIONS

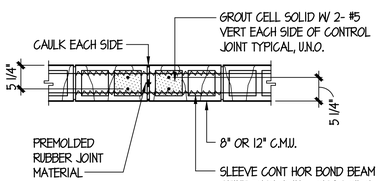

NOTE
HORIZONTAL JOINT REINFORCEMENT NOT CONT THROUGH CONTROL JOINT

TYP MASONRY CONTROL JOINT (M.C.J.) (6)

NO SCALE — 1914358

NOTE
MAX M.E.J. SPACING = 66'-8" - SEE WALL ELEVATIONS

NOTE
DO NOT NOT LOCATE WITHIN 2'-0" OF ANY WALL OPENING

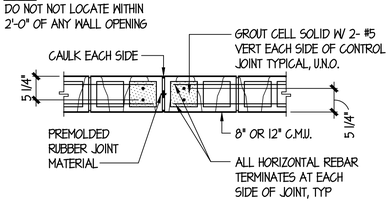

NOTE
HORIZONTAL JOINT REINFORCEMENT NOT CONT THROUGH CONTROL JOINT

TYP MASONRY EXPANSION JOINT (M.E.J.) (7)

NO SCALE — M1100B-TR

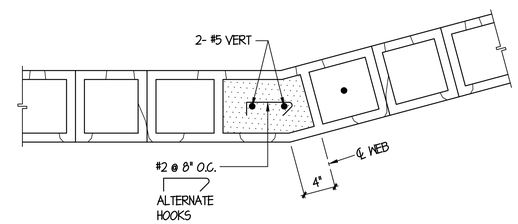

TYP REINFORCEMENT AT SKEW - PLAN VIEW (8)

NO SCALE — 1914358

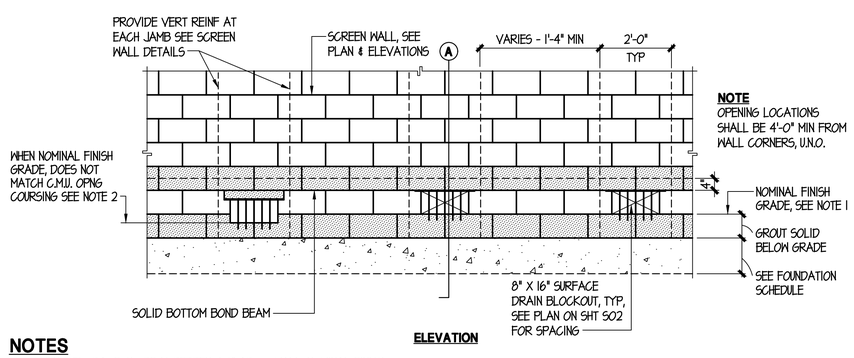

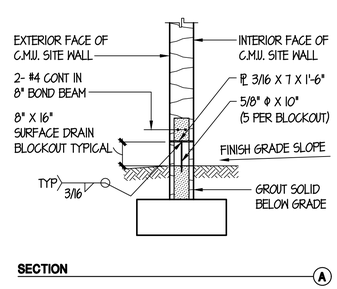

NOTES

1. WHEN THE GRADE SLOPE IS PERPENDICULAR TO WALL, NOMINAL FINISH GRADE IS INTENDED TO APPROXIMATELY MATCH BOTTOM OF OPENINGS
2. WHERE THE SLOPE OF FINISH GRADE ARE PARALLEL TO WALL AND THE SLOPE DOES NOT MATCH THE BOTTOM OF C.M.U. OPENINGS, ADJUSTMENTS IN FIELD MAY BE NECESSARY. THE ACTUAL HEIGHT OF C.M.U. OPENINGS SHALL BE NOT LESS THAN 6".

TYP REINFORCING AT WALL DRAIN OPENINGS (9)

SCALE ½" = 1'-0" — 1914358

REVISIONS

DATE	ENG	TECH	REV
9/23/2019	M. JACKSON	D. ARMSTRONG	00

DESCRIPTION:
ISSUED FOR CONSTRUCTION
JOB 9820.00/W06245721
TUCSON SUBSTATION

REGISTERED PROFESSIONAL ENGINEER (CIVIL) — 55005 — JENNIFER M. MCMAHON — Date Signed 10/8/19 — ARIZONA, U.S.A.

AUTOCADD

Tucson Electric Power Company
TUCSON, ARIZONA

TEP

TITLE: SITE GRADING & STRUCTURAL PERIMETER WALL SECTIONS & DETAILS TUCSON SUBSTATION

SHT.	DESCRIPTION	DWG. NUMBER
CVR	COVER SHEET, SITE AERIAL PHOTO & INDEX	0070-138-05-0013
S01	GENERAL STRUCTURAL NOTES AND ABBREVIATIONS	0070-138-05-0014
S02	PERIMETER WALL FOUNDATION PLAN	0070-138-05-0015
S03	PERIMETER WALL TYPE & DIMENSION PLAN	0070-138-05-0016
S04	PERIMETER WALL ELEVATIONS	0070-138-05-0017
S05	PERIMETER WALL SECTIONS	0070-138-05-0018
S06	PERIMETER WALL SECTIONS & DETAILS	0070-138-05-0019
S08	PERIMETER WALL SECTIONS & DETAILS	0070-138-05-0021

TRSQ T14S,R13E,S12,NE
REF # N/A
DWG # 0070-138-05-0020
REV 00 SHEET S07

STRUCTURAL CONCEPTS INC.
CONSULTING ENGINEERS
8230 E. BROADWAY SUITE W-7
TUCSON, AZ 85710
(520) 721-2324 SCICE.COM

SCI No. 19-143S8 - 240 - 36X24

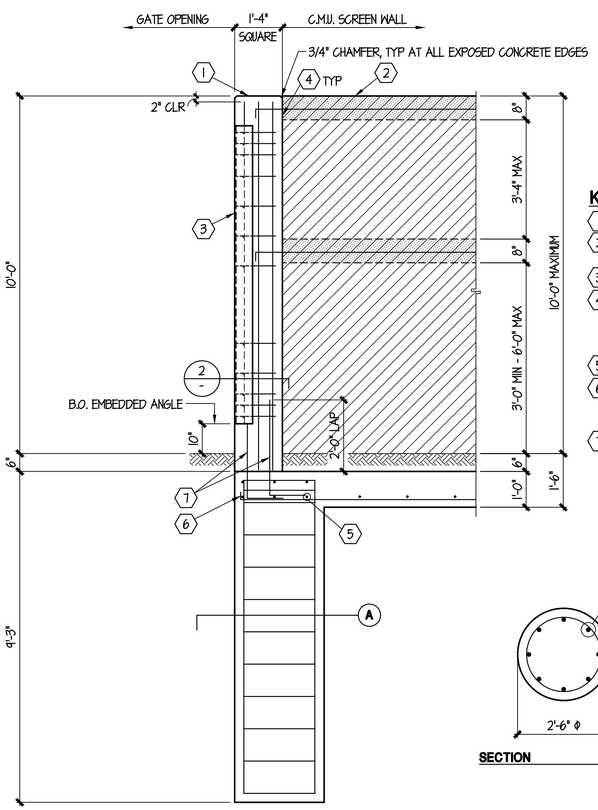

KEYNOTES

1. 1'-4" SQUARE CONCRETE PIER
2. TOP OF C.M.U. SCREEN WALL, SECURITY PICKET NOT SHOWN
3. EMBEDDED L6 X 6 X 1/2 - SEE 2/-
4. EXTEND BOTH TOP AND MID-HGT BOND BEAM REINF FROM C.M.U. WALL TO FAR EDGE OF PIER & TERMINATE WITH 90° STD HOOK
5. 6- #5 EACH WAY & TOP & BOTTOM
6. EXTEND FOOTING REINF FROM C.M.U. FOOTING 2'-0" IN PIER AND TERMINATE WITH 90° STD HOOK
7. #5 DOWELS 3'-7" / 1'-0"

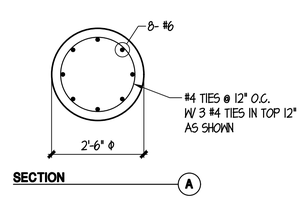

SECTION A

CONCRETE PIER AT C.M.U. WALL OPENING - INTERIOR ELEVATION (1)

SCALE 1/2 = 1'-0"

1914359

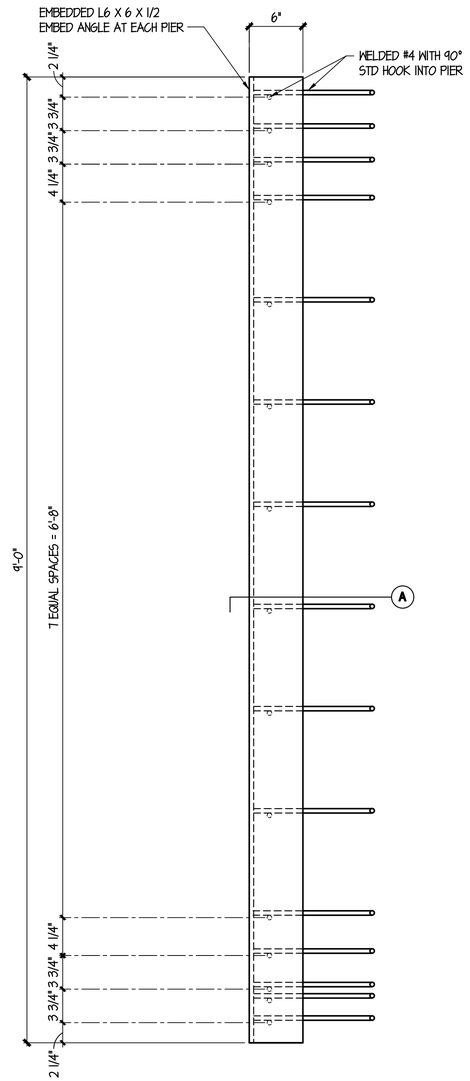

SWING GATE EMBEDDED ANGLE - ELEVATION

SCALE 1 1/2 = 1'-0"

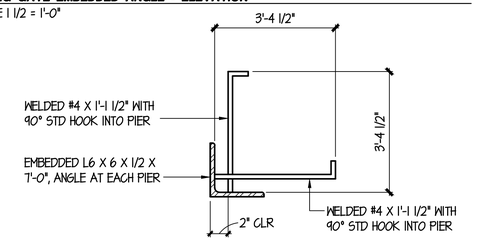

SWING GATE EMBEDDED ANGLE - PLAN (A)

SCALE 1 1/2 = 1'-0"

SWING GATE EMBEDDED ANGLE - ELEVATION (2)

SCALE 1 1/2" = 1'-0"

1914359

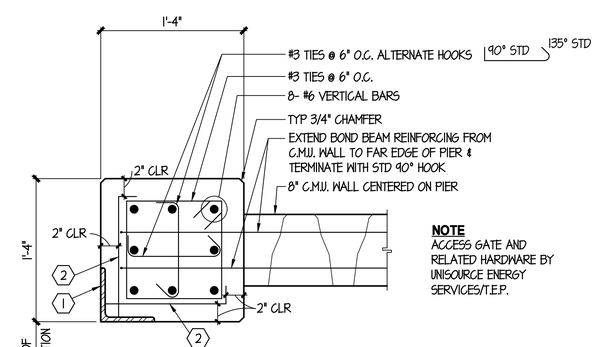

NOTE
ACCESS GATE AND RELATED HARDWARE BY UNISOURCE ENERGY SERVICES/T.E.P.

KEYNOTES

1. EMBEDDED ANGLE - EMBED ANGLE AT EACH PIER - SEE DETAIL 2 THIS SHEET
2. WELDED #4 - SEE PLAN FOR LOCATIONS AND 2/- FOR ADDITIONAL INFORMATION

CONCRETE PIER AT C.M.U. WALL OPENING - PLAN (3)

SCALE 1 1/2 = 1'-0"

1914359

SHT.	DESCRIPTION	DWG. NUMBER
CVR	COVER SHEET, SITE AERIAL PHOTO & INDEX	0070-138-05-0013
S01	GENERAL STRUCTURAL NOTES AND ABBREVIATIONS	0070-138-05-0014
S02	PERIMETER WALL FOUNDATION PLAN	0070-138-05-0015
S03	PERIMETER WALL TYPE & DIMENSION PLAN	0070-138-05-0016
S04	PERIMETER WALL ELEVATIONS	0070-138-05-0017
S05	PERIMETER WALL SECTIONS	0070-138-05-0018
S06	PERIMETER WALL SECTIONS & DETAILS	0070-138-05-0019
S07	PERIMETER WALL SECTIONS & DETAILS	0070-138-05-0020

STRUCTURAL CONCEPTS INC.
CONSULTING ENGINEERS
8230 E. BROADWAY SUITE W-7
TUCSON, AZ 85710
(520) 721-2324 SCICE.COM

SCI No. 19-143S9 - 240 - 36X24

REVISIONS

DATE	ENG	TECH	REV
9/23/2019	M. JACKSON	D. ARMSTRONG	00

DESCRIPTION:
ISSUED FOR CONSTRUCTION
JOB 9820.00/W06245721
TUCSON SUBSTATION

REGISTERED PROFESSIONAL ENGINEER (STRUCTURAL) 55005 JENNIFER M. MCMAHON Date Signed 10/8/19 ARIZONA, U.S.A.

AUTOCADD

Tucson Electric Power Company
TUCSON, ARIZONA

TEP

TITLE: SITE GRADING & STRUCTURAL
PERIMETER WALL SECTIONS & DETAILS
TUCSON SUBSTATION

TRSQ T14S,R13E,S12,NE
REF # N/A
DWG # 0070-138-05-0021
REV 00 SHEET S08