SITE PLAN KEYNOTES

1. EXISTING CMU WALL TO REMAIN.
2. EXISTING CONCRETE CURB TO REMAIN.
3. EXISTING CONCRETE DRIVE TO REMAIN.
4. NEW FRONT PORCH.
5. NEW CARPORT.
6. EXISTING ELECTRICAL SERVICE TO REMAIN.
7. EXISTING WATER METER TO REMAIN
8. NEW SITE WALL 6' AFG.

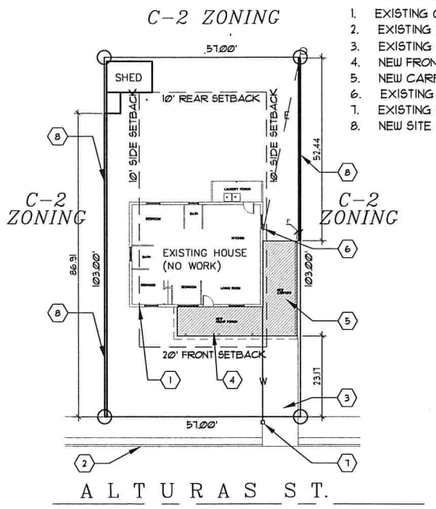

SITE PLAN

1" = 20.0'

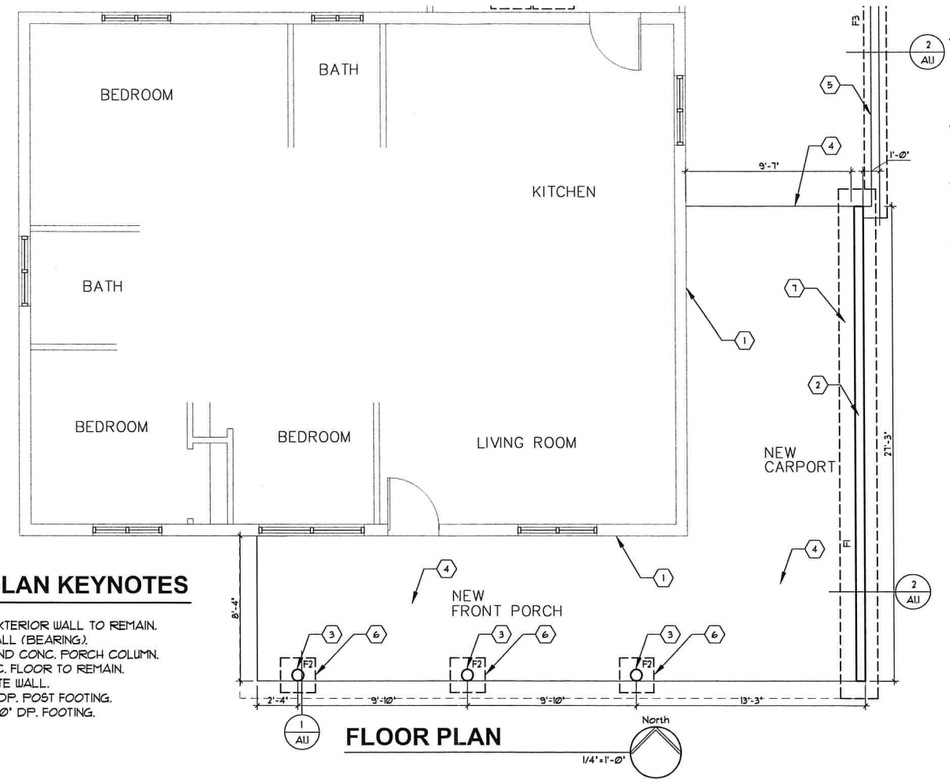

FLOOR PLAN KEYNOTES

1. EXISTING EXTERIOR WALL TO REMAIN.
2. NEW CMU WALL (BEARING).
3. NEW 8" ROUND CONC. PORCH COLUMN.
4. EXIST. CONC. FLOOR TO REMAIN.
5. NEW CMU SITE WALL.
6. 24"x24"x10" DP. POST FOOTING.
7. 24" WIDE x 10" DP. FOOTING.

FLOOR PLAN

1/4" = 1'-0"

OWNER

BASILIO RODRIGUEZ JIMENEZ & MARTIN BERNAL
444 W. ALTURAS ST.
TUCSON, AZ 85705

PARCEL NO.

107-09-0350

LEGAL DESCRIPTION

MIRACLE MILE ESTATE LOT 12 & 13 LESS N 7.5' FOR ALLEY BLK 3

PROJECT ADDRESS

444 W. ALTURAS ST.

CODE REVIEW

Existing Zoning: C-2 ZONING
Square footage of lot: 5,871 S.F.
Square footage of existing dwelling: 1,167 S.F. (LIVING) / 90 S.F. (EXT. LAUNDRY)
Square footage of addition: 208 S.F. (FRONT PORCH)/ 306 S.F. (CARPORT)
Total livable area: 1,167 S.F. TOTAL LIVING AREA
Square footage of vehicular use area: 249 S.F. DRIVEWAY
Total lot coverage (Building & Vehicular use areas): 1,257+514+249 S.F. = 2,020 S.F.
Percent lot coverage (Total lot coverage ÷ lot s.f.): 34%
Maximum height of new structure: 10'-6"(CARPORT WALL)
Height of exterior walls for new building or addition:

NORTH:	8.5'	(10'-0" SET BACK)
SOUTH:	8.5'	(20'-0" SET BACK)
EAST:	10.6.1'	(10'-0" SET BACK)
WEST:	8.5'	(10'-0" SET BACK)

ALL CONSTRUCTION SHALL COMPLY WITH 2012 IRC

ELEVATION/ SECTION KEYNOTES

1. EXISTING EXTERIOR WALL TO REMAIN.
2. NEW CMU WALL (BEARING).
3. NEW 8" ROUND CONC. PORCH COLUMN.
4. EXIST. CONC. FLOOR TO REMAIN.
5. NEW 3-PLY B.U. ROOF.
6. EXIST. ROOF TO REMAIN.

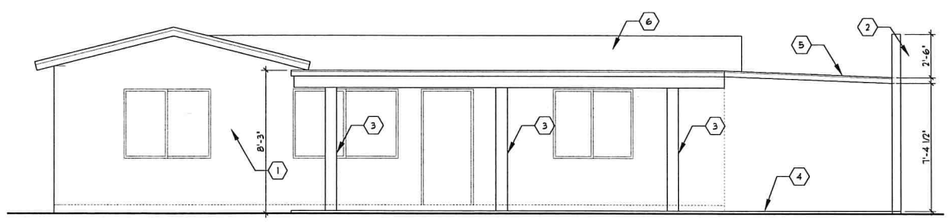

SOUTH ELEVATION

1/4" - 1'-0"

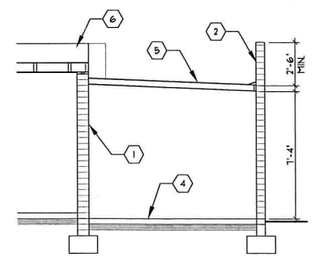

SECTION A

1/4" - 1'-0"

FOOTING SCHEDULE

MARK	SIZE	REINFORCING
F-1	24" WIDE X CONT. X 10" DEEP	2 #4 CONT.
F-2	24"x24" X 10" DEEP	3 #4 EACH WAY
F-3	16" WIDE X CONT. X 10" DEEP	2 #4 CONT.

GENERAL NOTES

1. 1,500 PSF SOIL PRESSURE ASSUMED PER 2012 IRC
2. USE MIN OF 3,000 PSI CONCRETE WITH MICRO-FIBER AND WWF

FRAMING PLAN KEYNOTES

1. NEW CMU WALL.
2. NEW 2x LEDGER.
3. NEW CRICKET.
4. NEW 2x FASCIA TO MATCH EXIST.

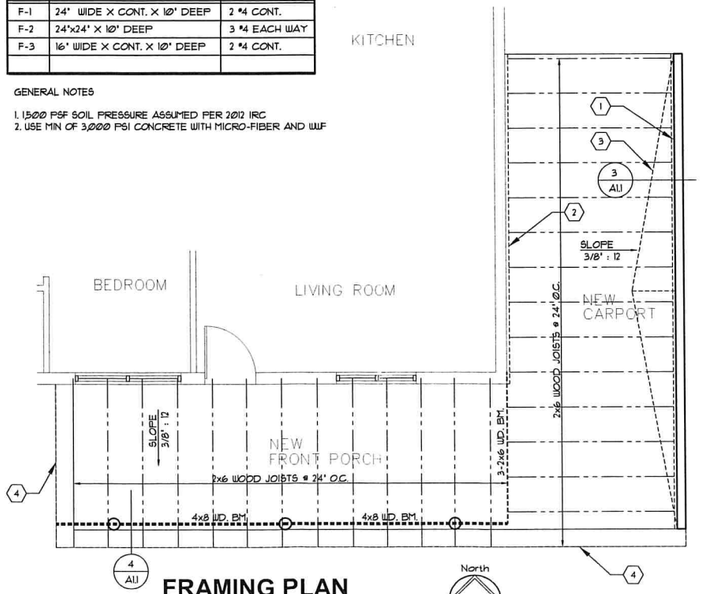

FRAMING PLAN

1/4" = 1'-0"

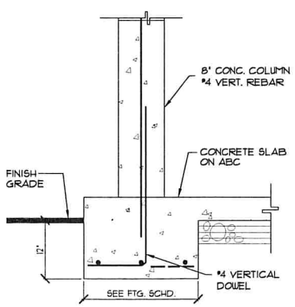

1 POST FOOTING

fnd-wXX 1"=1'-0"

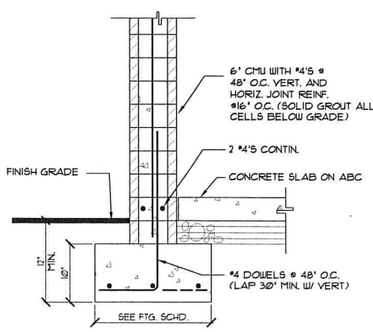

2 CMU WALL

fnd-wXX 1"=1'-0"

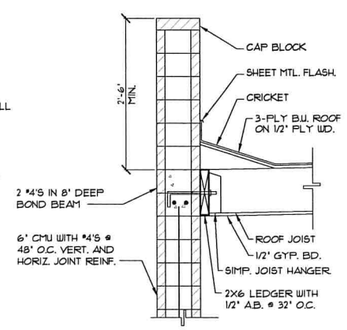

3 BEARING WALL

1"=1'-0"

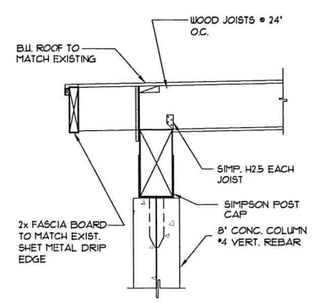

4 PORCH OVERHANG

1"=1'-0"

QUIHUIS ARCHITECTURE CO. LLC

2012 E. Broadway Blvd., Suite 204
Tucson, Arizona 85719
Office: (520) 591-7760
Fax: (520) 333-3233

CONSULTANTS

CIVIL
N/A

STRUCTURAL
N/A

MECHANICAL
N/A

ELECTRICAL
N/A

REGISTERED ARCHITECT
CERTIFICATE NO. 29565
DANNY X. QUIHUIS
Date Signed 11-09-17
ARIZONA U.S.A.
EXPIRES 30 SEPT., 2019

TITLE:

SITE PLAN CODE REVIEW

ALTURAS CARPORT

444 W. ALTURAS ST.
TUCSON, ARIZONA

REVISION SCHEDULE

#	DATE	DESCRIPTION	BY:
-	—	—	—

DRAWN: GZ
DATE: 11-09-17
SCALE: AS NOTED
QAC JOB: 2017.25

SHEET:

A1.1

1 OF 1 SHEETS

These drawings are the instruments of service and the property of QUIHUIS ARCHITECTURE CO. LLC. All rights are reserved. Information on the drawings are for the purpose of this project and shall not be used elsewhere without the expressed written consent.