LEGAL DESCRIPTION

Coronado Heights

Building Area

Existing house's	2512
Existing Porch's	110
Driveway	372
New porch	196
Work shop	484
Play house	70
Play structure	1232

total SQ ft 4,986

1634 E. SILVER ST.

Lot is 15,000 sqft

Lot Cov is 33%

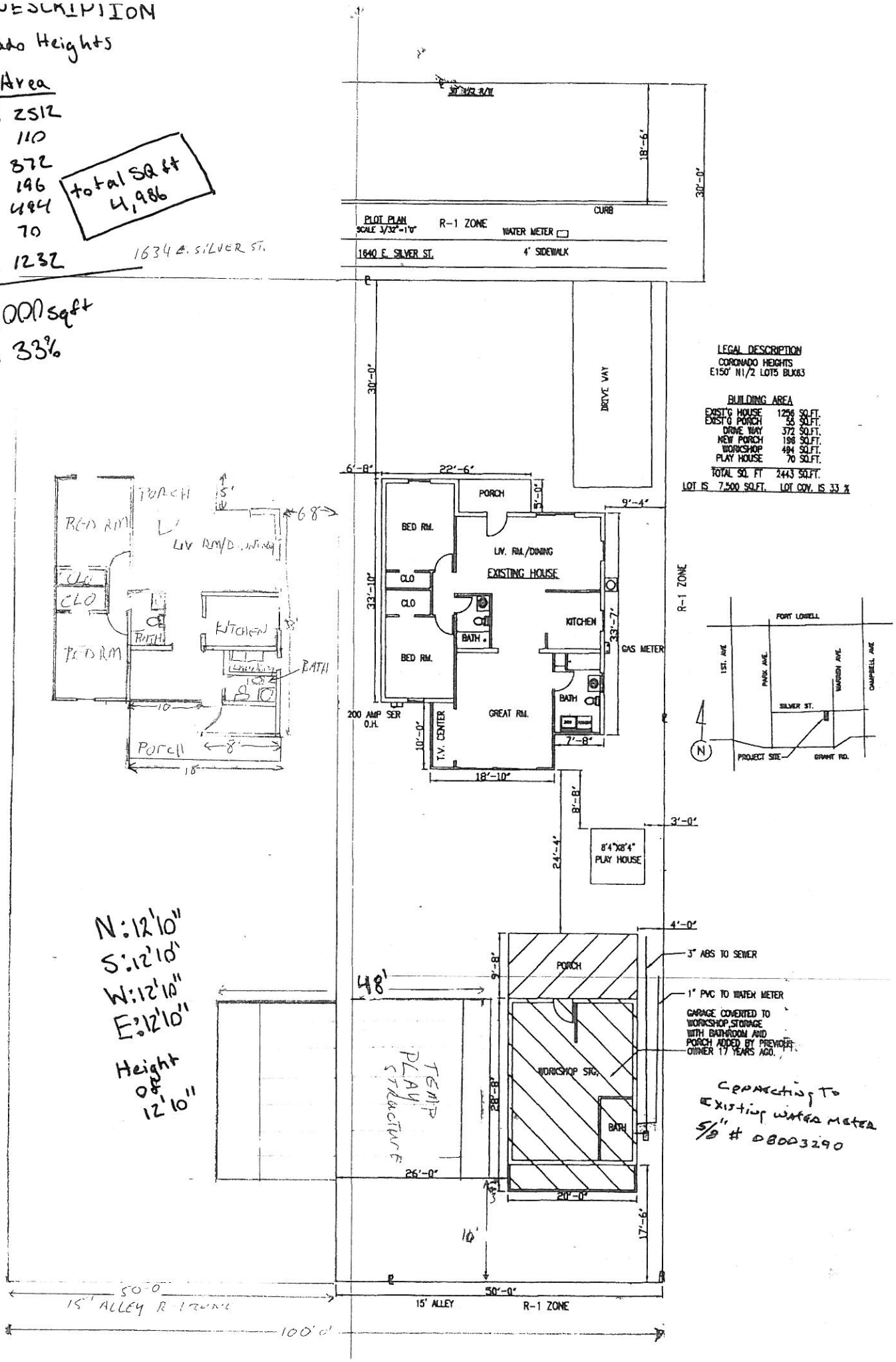

Fig. 8

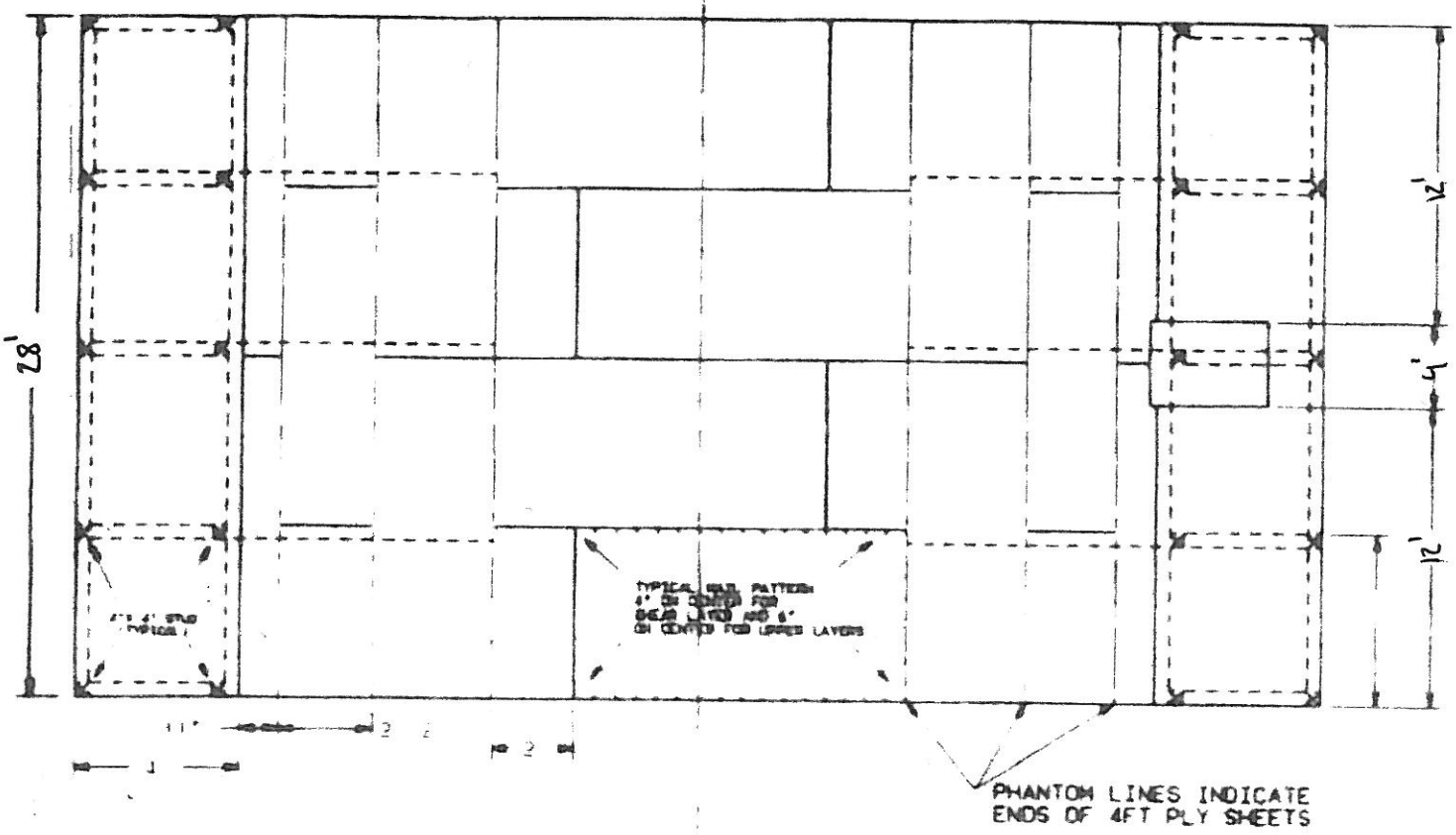

TOP VIEW

Fig. 9

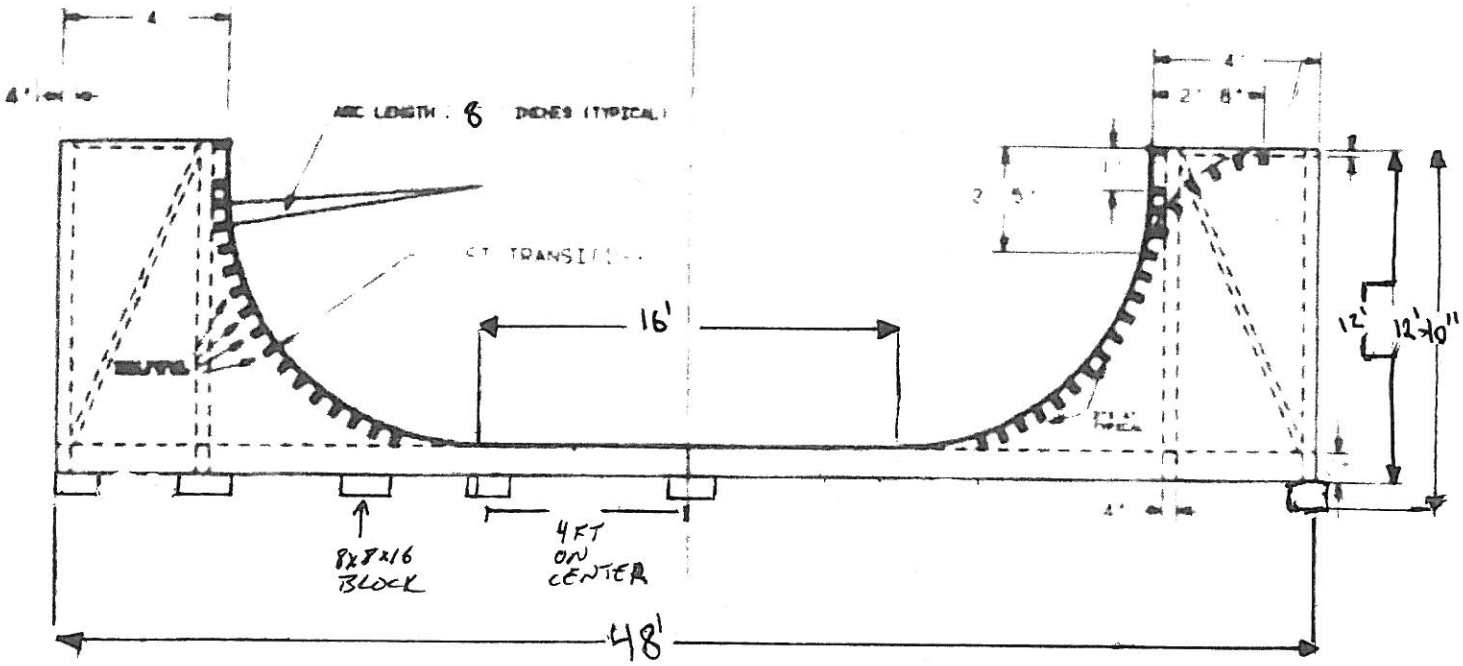

Basic Side View

Fig. 10

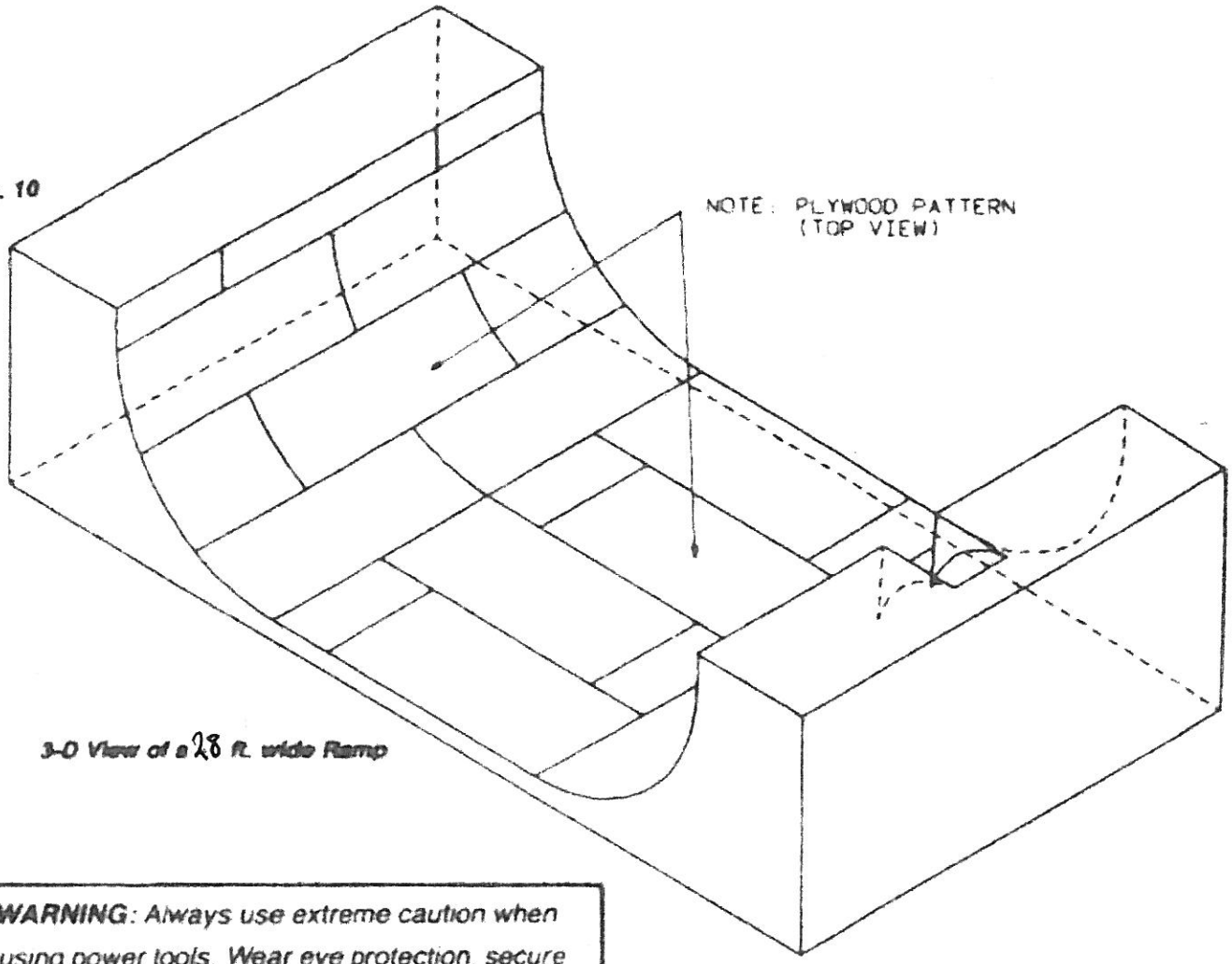

3-D View of a 28 ft. wide Ramp

WARNING: *Always use extreme caution when using power tools. Wear eye protection, secure loose clothing, and never use electricity around water. If you can't handle it, get someone with a knowledge of basic carpentry skills to help out.*

Fig. 11

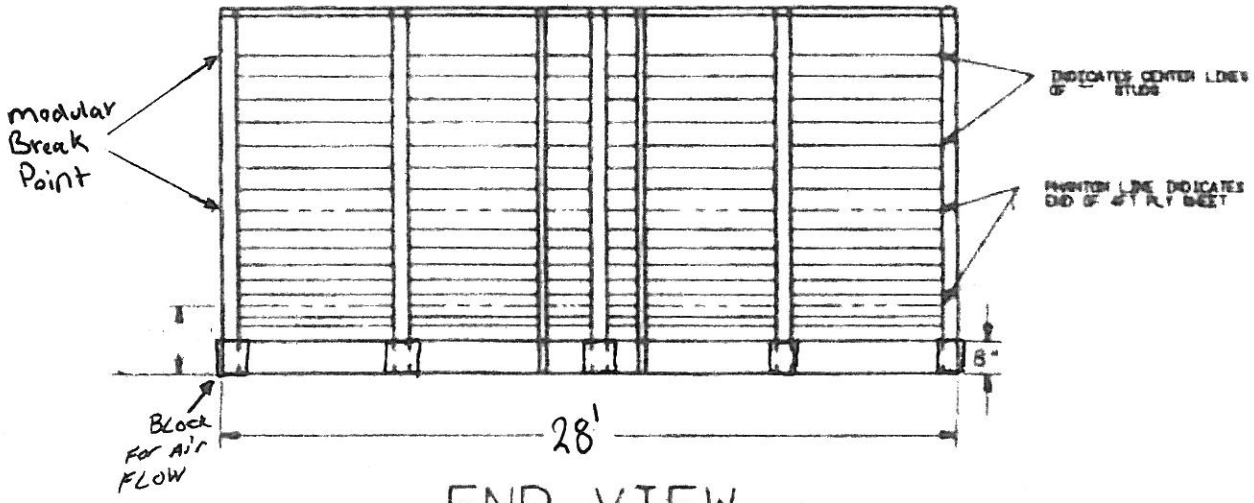

END VIEW

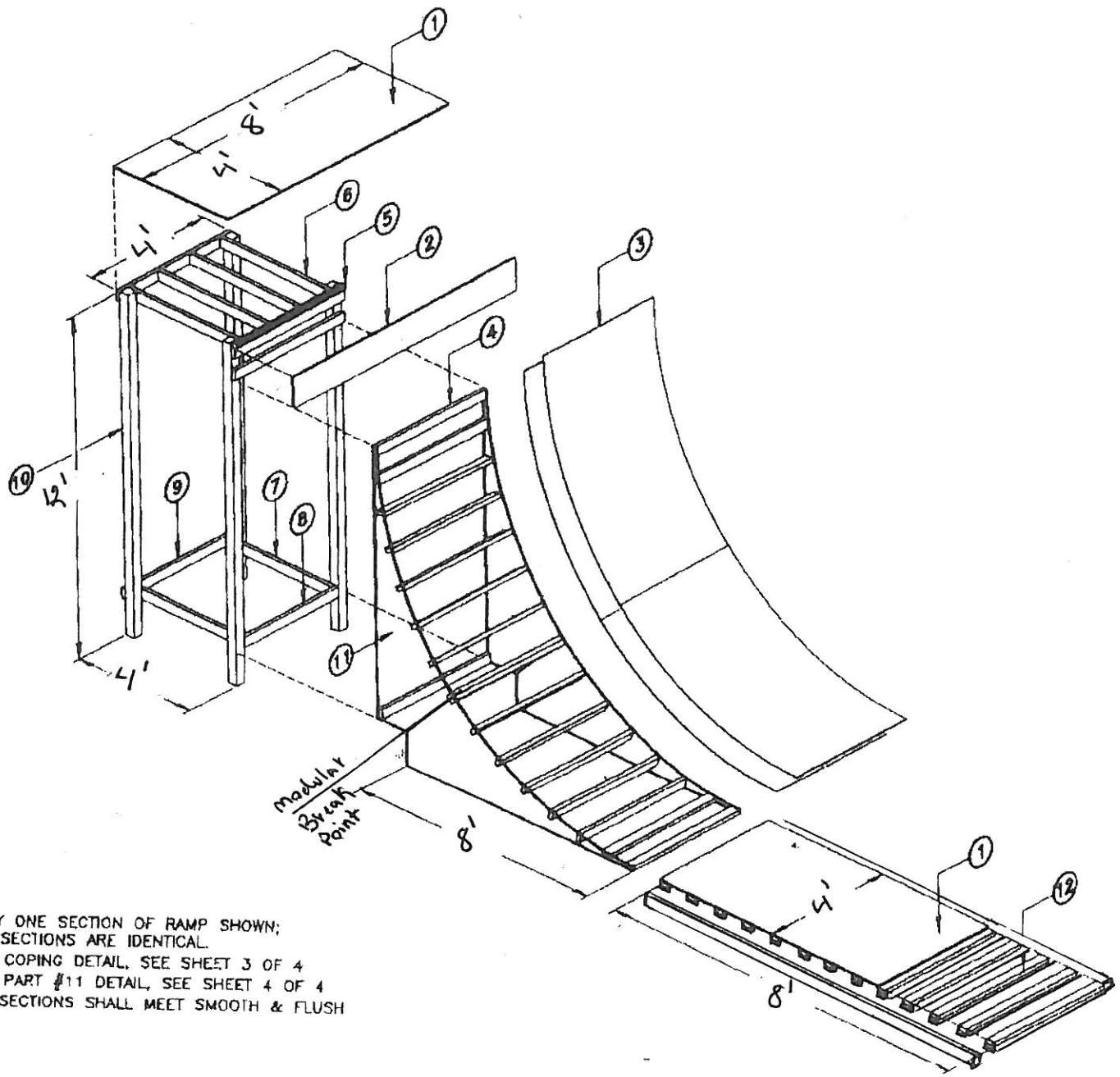

NOTES:

1. ONLY ONE SECTION OF RAMP SHOWN; ALL SECTIONS ARE IDENTICAL.
2. FOR COPING DETAIL, SEE SHEET 3 OF 4
3. FOR PART #11 DETAIL, SEE SHEET 4 OF 4
4. ALL SECTIONS SHALL MEET SMOOTH & FLUSH

ITEM	DESCRIPTION	QTY.
12	3.8 cm x 8.9 cm WOOD STUDS 122 cm LONG	
11	1.9 cm THICK PLYWOOD SEE DETAIL SHEET 4 OF 4	
10	8.9 cm x 8.9 cm WOOD POSTS 304.8 cm LONG	
9	3.8 cm x 8.9 cm WOOD STUDS 122 cm LONG	
8	3.8 cm x 8.9 cm WOOD STUDS 104 cm LONG	
7	3.8 cm x 8.9 cm WOOD STUDS [illegible] cm LONG	
6	3.8 cm x 8.9 cm WOOD STUDS 118.2 cm LONG	
5	5cm DIA. STEEL PIPE (COPING) 122cm OR 244cm LONG	
4	3.8 cm x 8.9 cm WOOD STUDS 118.2 cm LONG	
3	1.9cm THICK PLYWOOD 122 cm WIDE, CUT PROPER LENGTH	
2	1.9 cm THICK PLYWOOD 244 cm LONG	
1	1.9 cm THICK PLYWOOD 122cm x 244 cm	

1/2 PIPE RAMP