M. H. PARK NAME: _____

_____

ADDRESS: _____

SPACE NUMBER: _____

ACCESSORIES

_____ AC
_____ COOLER
_____ AWNING _____ x _____
_____ CARPORT
_____ SHED
_____ SKIRTING
_____ STEPS

ZONING REVIEW SECTION

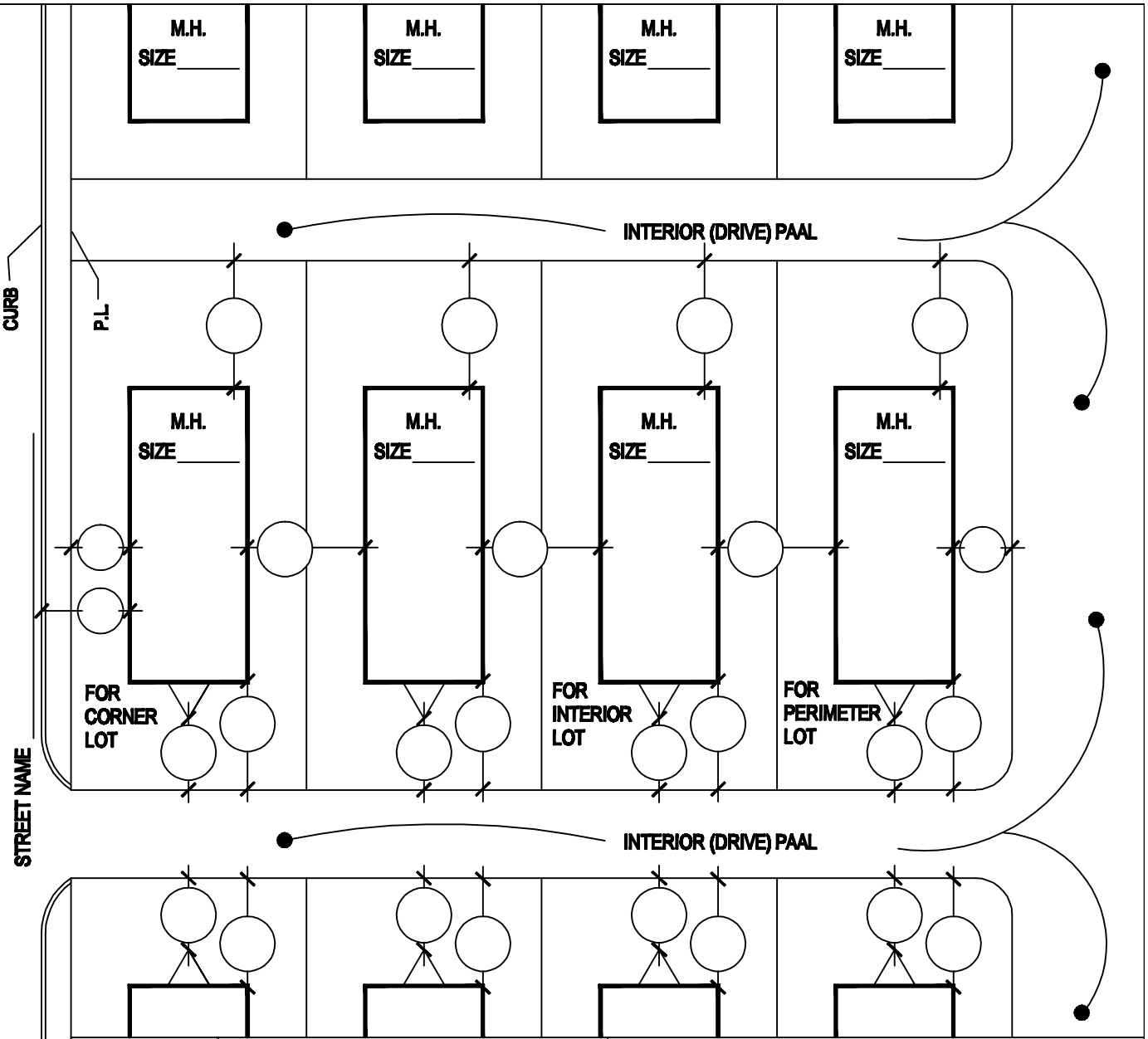

NORTH ARROW

FLOODPLAIN REVIEW SECTION

RESIDENTIAL REVIEW SECTION

M. H. PARK NAME: _____

_____

ADDRESS: _____

SPACE NUMBER: _____

ACCESSORIES

_____ AC
_____ COOLER
_____ AWNING _____ x _____
_____ CARPORT
_____ SHED
_____ SKIRTING
_____ STEPS

INTERIOR (DRIVE) PAAL

INTERIOR (DRIVE) PAAL

M.H. SIZE_____

FOR CORNER LOT

M.H. SIZE_____

M.H. SIZE_____

FOR INTERIOR LOT

M.H. SIZE_____

FOR PERIMETER LOT

INTERIOR (DRIVE) PAAL

INTERIOR (DRIVE) PAAL

ZONING REVIEW SECTION

NORTH ARROW

FLOODPLAIN REVIEW SECTION

RESIDENTIAL REVIEW SECTION

M. H. PARK NAME: _____

_____

ADDRESS: _____

SPACE NUMBER: _____

ACCESSORIES

_____ AC
_____ COOLER
_____ AWNING _____ x _____
_____ CARPORT
_____ SHED
_____ SKIRTING
_____ STEPS

ZONING REVIEW SECTION

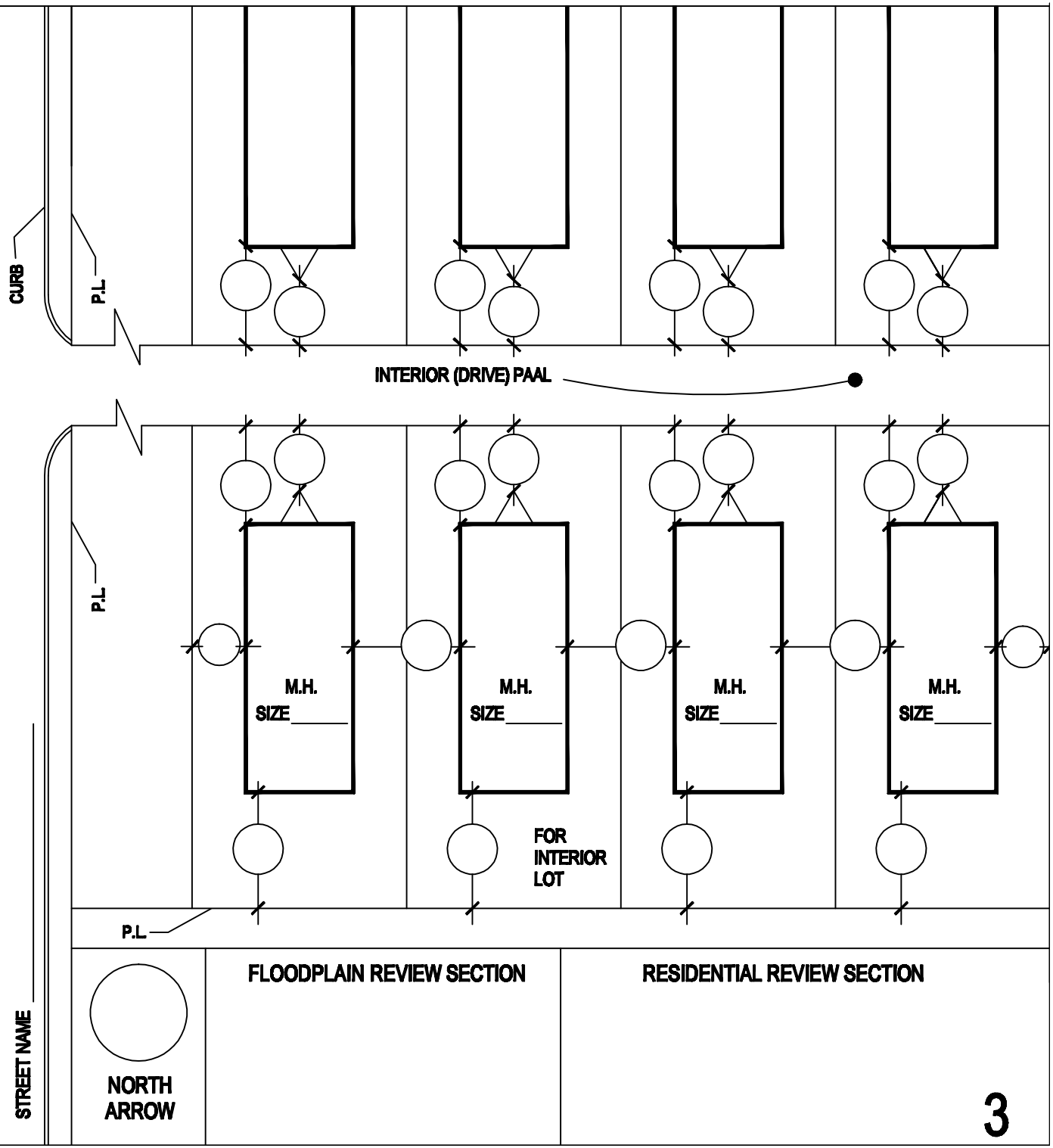

M. H. PARK NAME: _____

_____

ADDRESS: _____

SPACE NUMBER: _____

ACCESSORIES

_____ AC
_____ COOLER
_____ AWNING _____ x _____
_____ CARPORT
_____ SHED
_____ SKIRTING
_____ STEPS

INTERIOR (DRIVE) PAAL

ZONING REVIEW SECTION

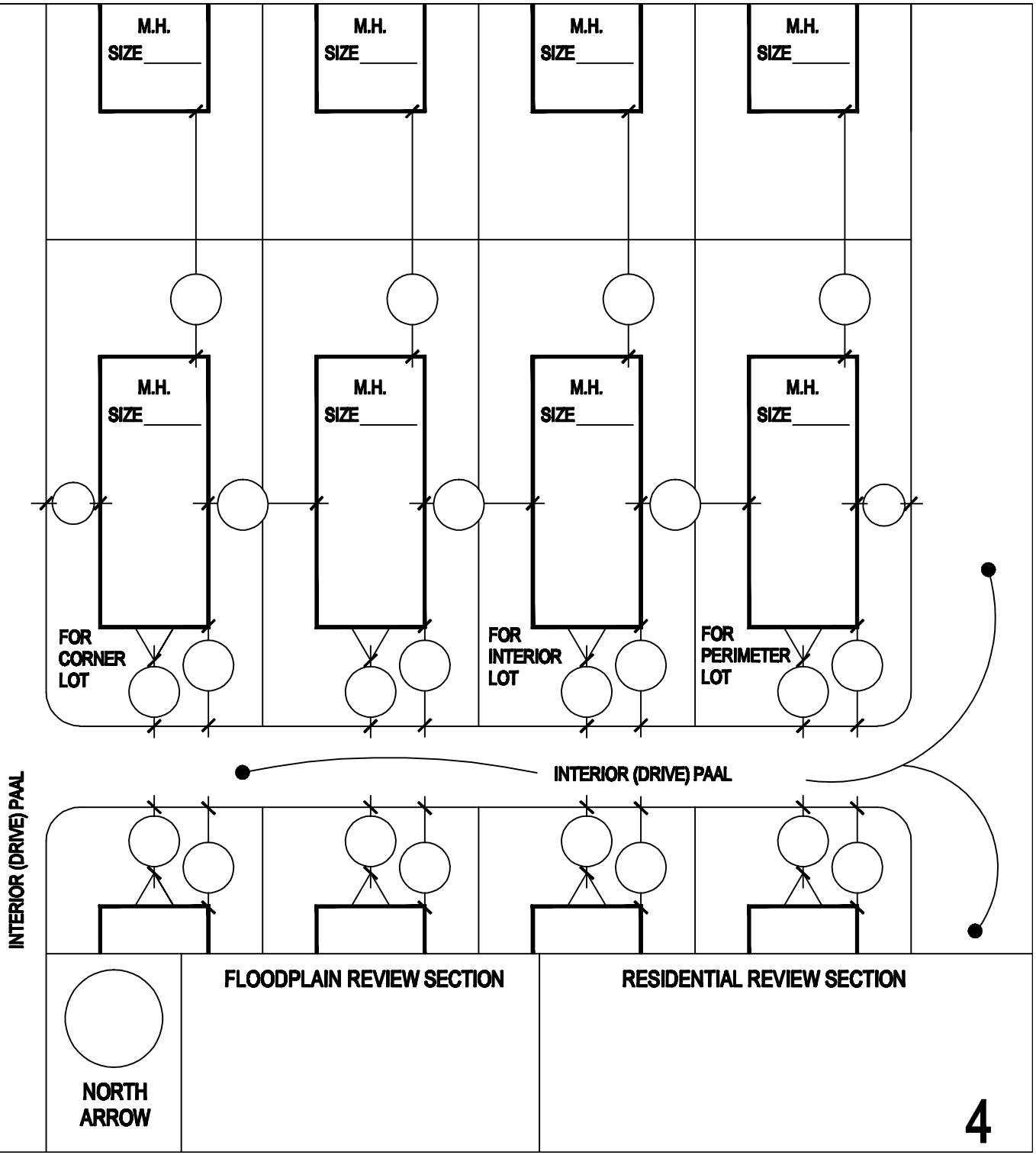

M. H. PARK NAME: _____

_____

ADDRESS: _____

SPACE NUMBER: _____

ACCESSORIES

_____ AC
_____ COOLER
_____ AWNING _____ x _____
_____ CARPORT
_____ SHED
_____ SKIRTING
_____ STEPS

Street Name _____

ZONING REVIEW SECTION

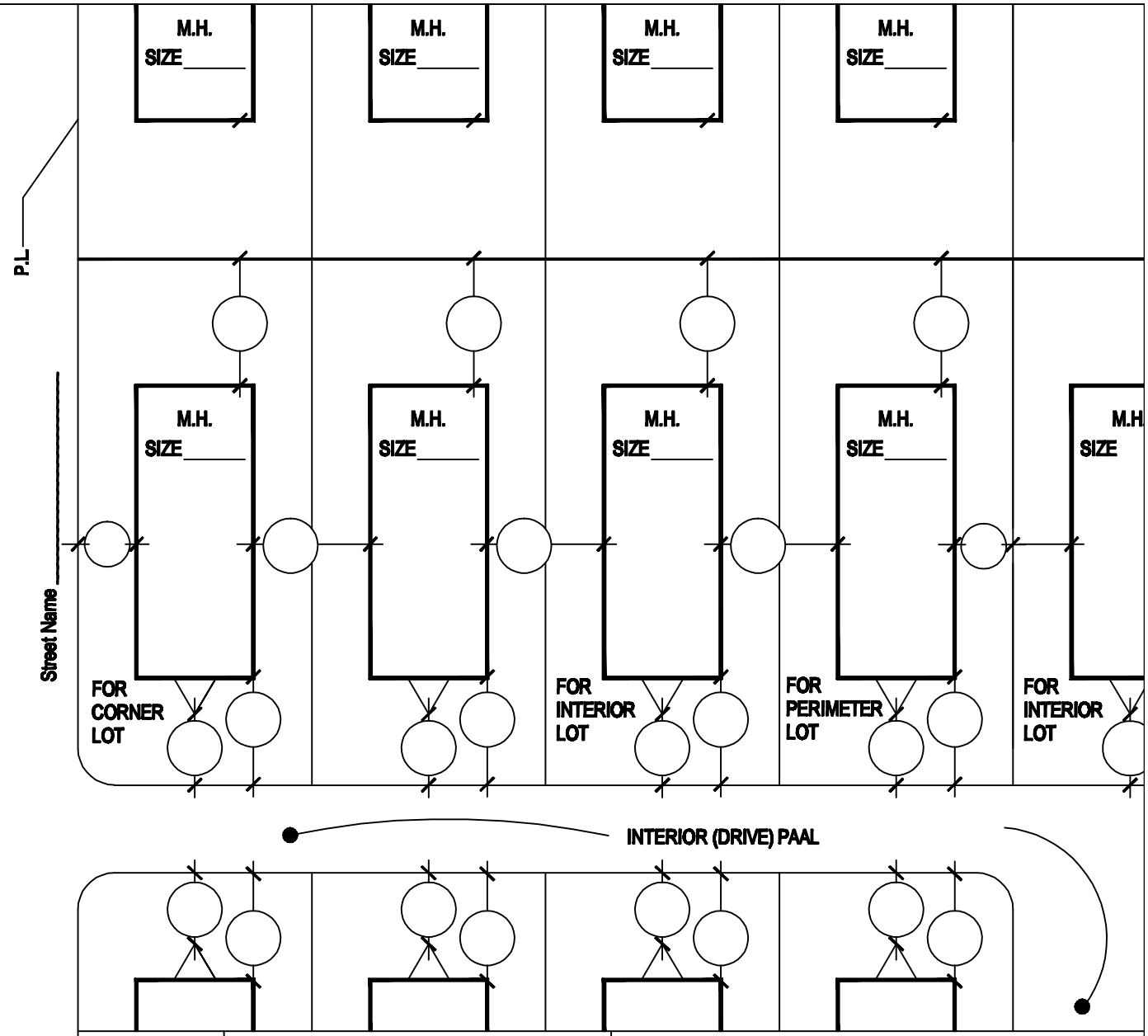

NORTH ARROW

FLOODPLAIN REVIEW SECTION

RESIDENTIAL REVIEW SECTION

M. H. PARK NAME: _____

_____

ADDRESS: _____

SPACE NUMBER: _____

ACCESSORIES

_____ AC
_____ COOLER
_____ AWNING _____ x _____
_____ CARPORT
_____ SHED
_____ SKIRTING
_____ STEPS

entrance

ZONING REVIEW SECTION

INTERIOR (DRIVE) PAAL

FOR CORNER LOT

M.H. SIZE

M.H. SIZE _____

M.H. SIZE _____

M.H. SIZE _____

INTERIOR (DRIVE) PAAL

NORTH ARROW

FLOODPLAIN REVIEW SECTION

RESIDENTIAL REVIEW SECTION

M. H. PARK NAME: _____

_____

ADDRESS: _____

SPACE NUMBER: _____

ACCESSORIES

_____ AC
_____ COOLER
_____ AWNING _____ x _____
_____ CARPORT
_____ SHED
_____ SKIRTING
_____ STEPS

ZONING REVIEW SECTION

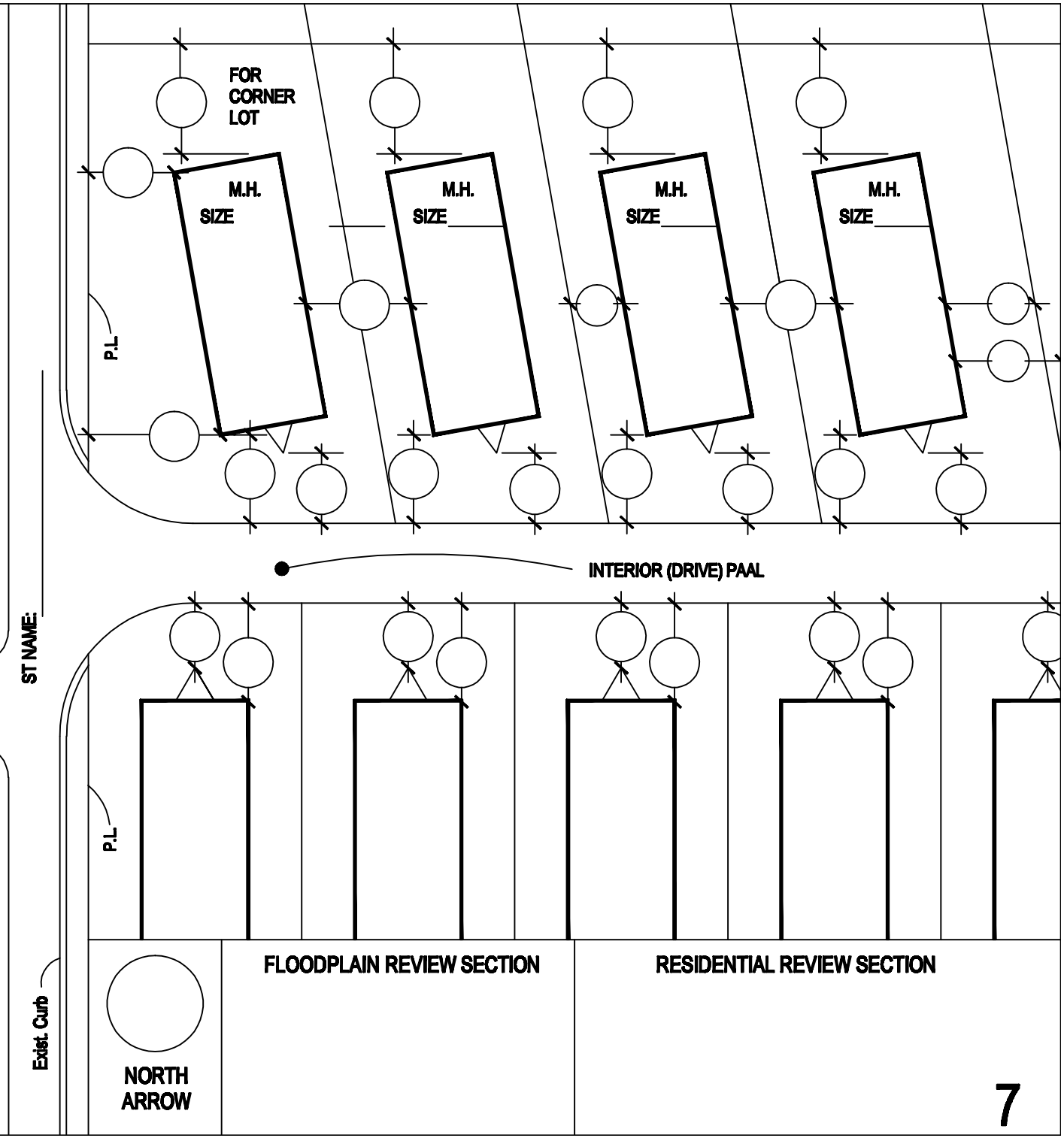

M. H. PARK NAME: _____

_____

ADDRESS: _____

SPACE NUMBER: _____

ACCESSORIES

_____ AC
_____ COOLER
_____ AWNING _____ x _____
_____ CARPORT
_____ SHED
_____ SKIRTING
_____ STEPS

ZONING REVIEW SECTION

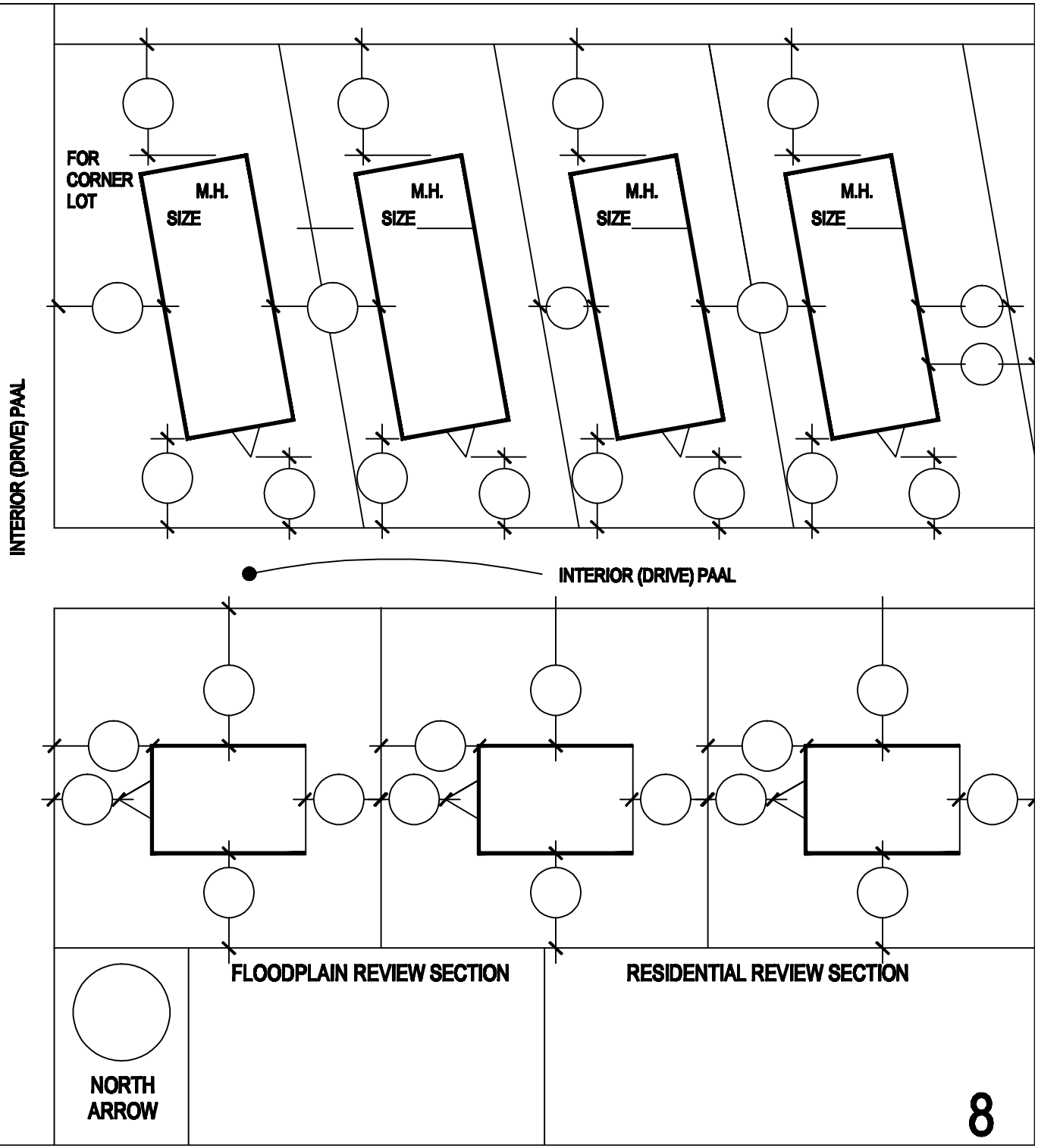

M. H. PARK NAME: _____

_____

ADDRESS: _____

SPACE NUMBER: _____

ACCESSORIES

_____ AC
_____ COOLER
_____ AWNING _____ x _____
_____ CARPORT
_____ SHED
_____ SKIRTING
_____ STEPS

ZONING REVIEW SECTION

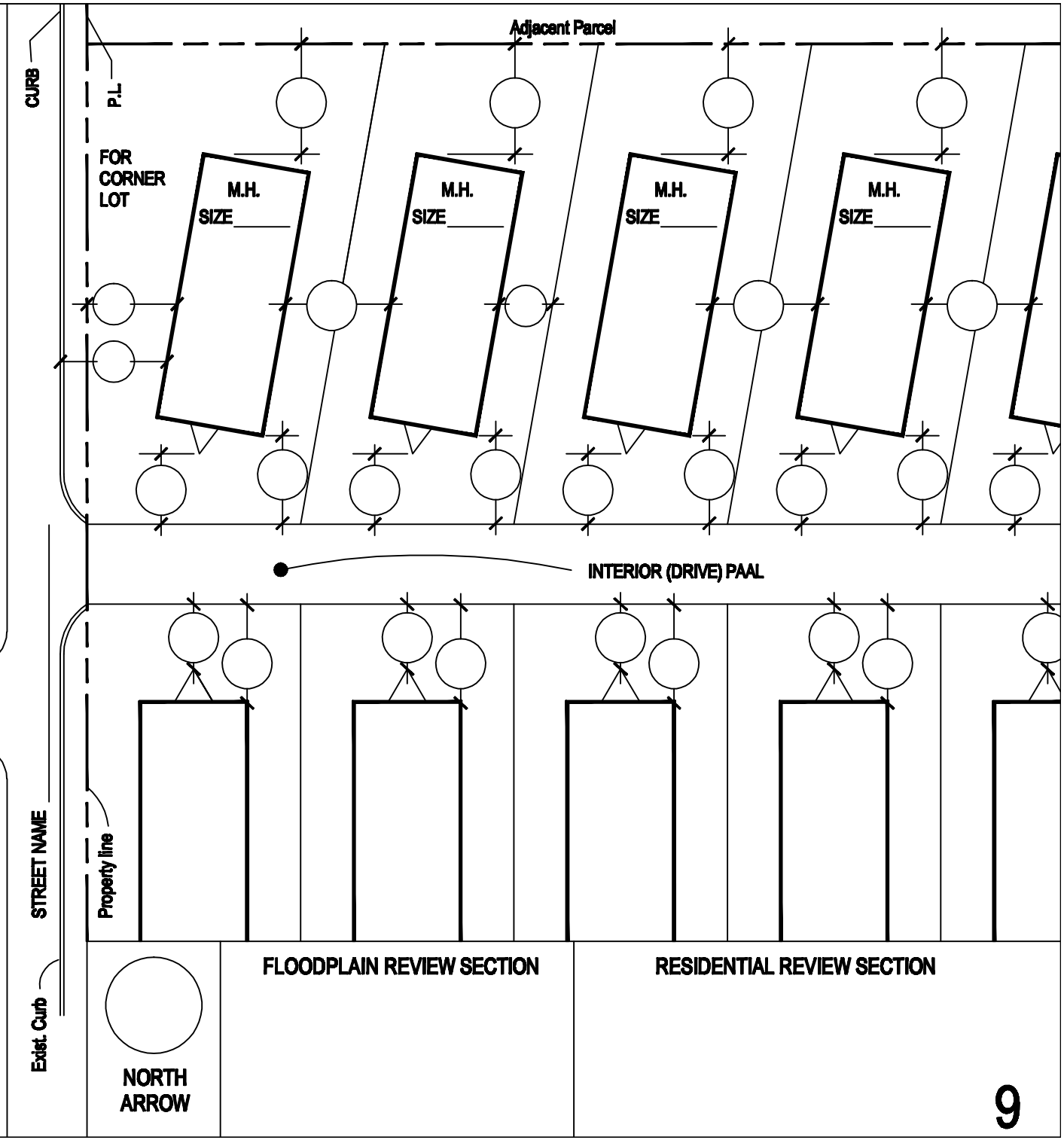

M. H. PARK NAME: _____

_____

ADDRESS: _____

SPACE NUMBER: _____

ZONING REVIEW SECTION

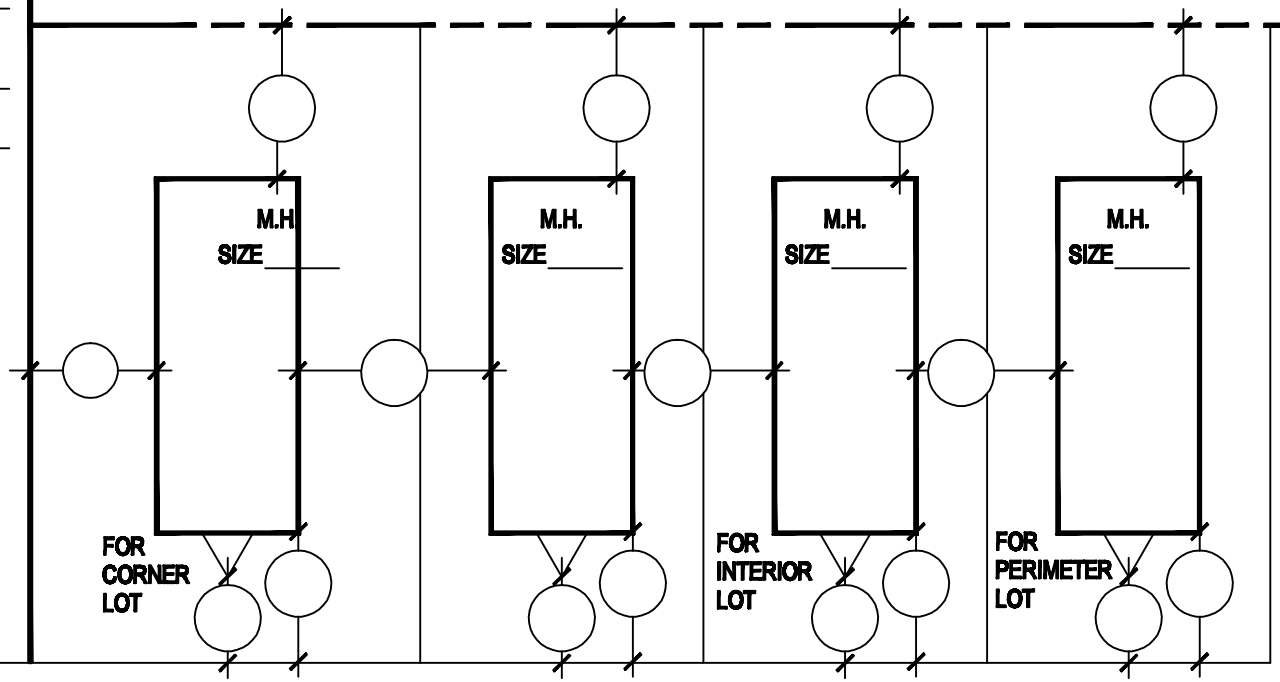

INTERIOR (DRIVE) PAAL

ACCESSORIES

_____ AC
_____ COOLER
_____ AWNING _____ x _____
_____ CARPORT
_____ SHED
_____ SKIRTING
_____ STEPS

INTERIOR (DRIVE) PAAL

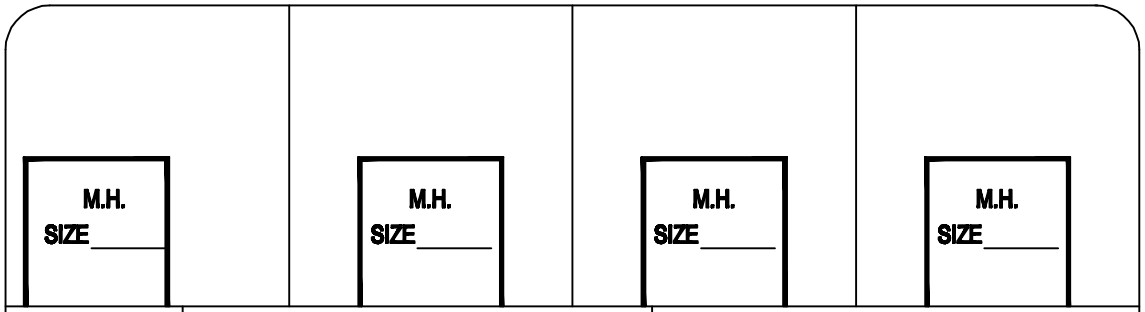

NORTH
ARROW

RESIDENTIAL REVIEW SECTION

FLOODPLAIN REVIEW SECTION

M. H. PARK NAME: _____

_____

ADDRESS: _____

SPACE NUMBER: _____

ZONING REVIEW SECTION

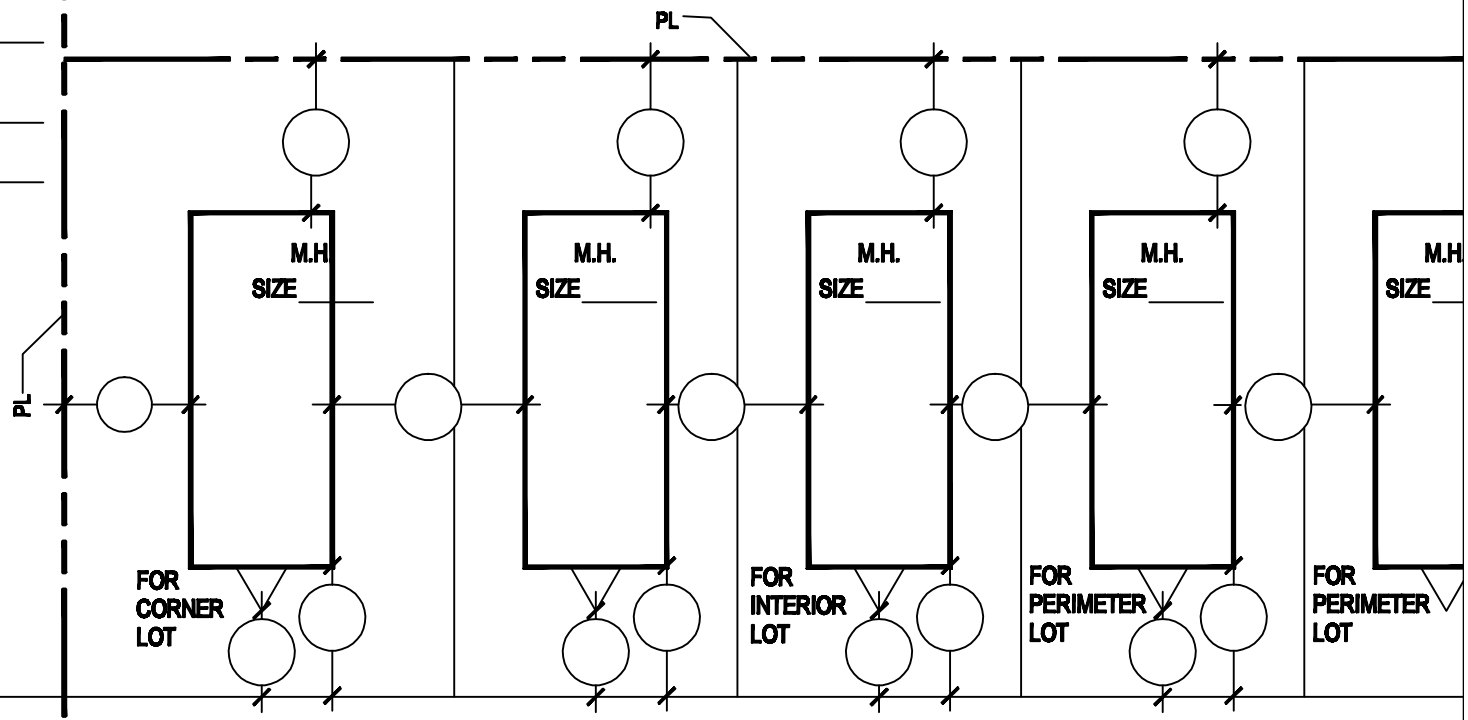

INTERIOR (DRIVE) PAAL

ACCESSORIES

_____ AC
_____ COOLER
_____ AWNING _____ x _____
_____ CARPORT
_____ SHED
_____ SKIRTING
_____ STEPS

INTERIOR (DRIVE) PAAL

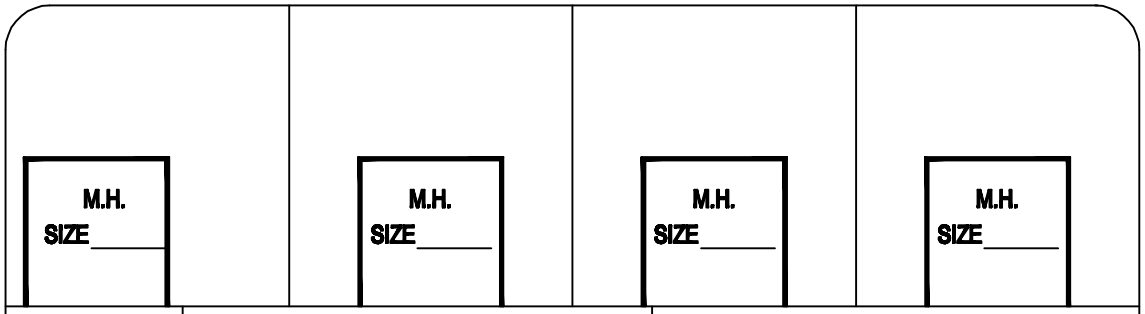

NORTH
ARROW

RESIDENTIAL REVIEW SECTION

FLOODPLAIN REVIEW SECTION

M. H. PARK NAME: _____

_____

ADDRESS: _____

SPACE NUMBER: _____

ZONING REVIEW SECTION

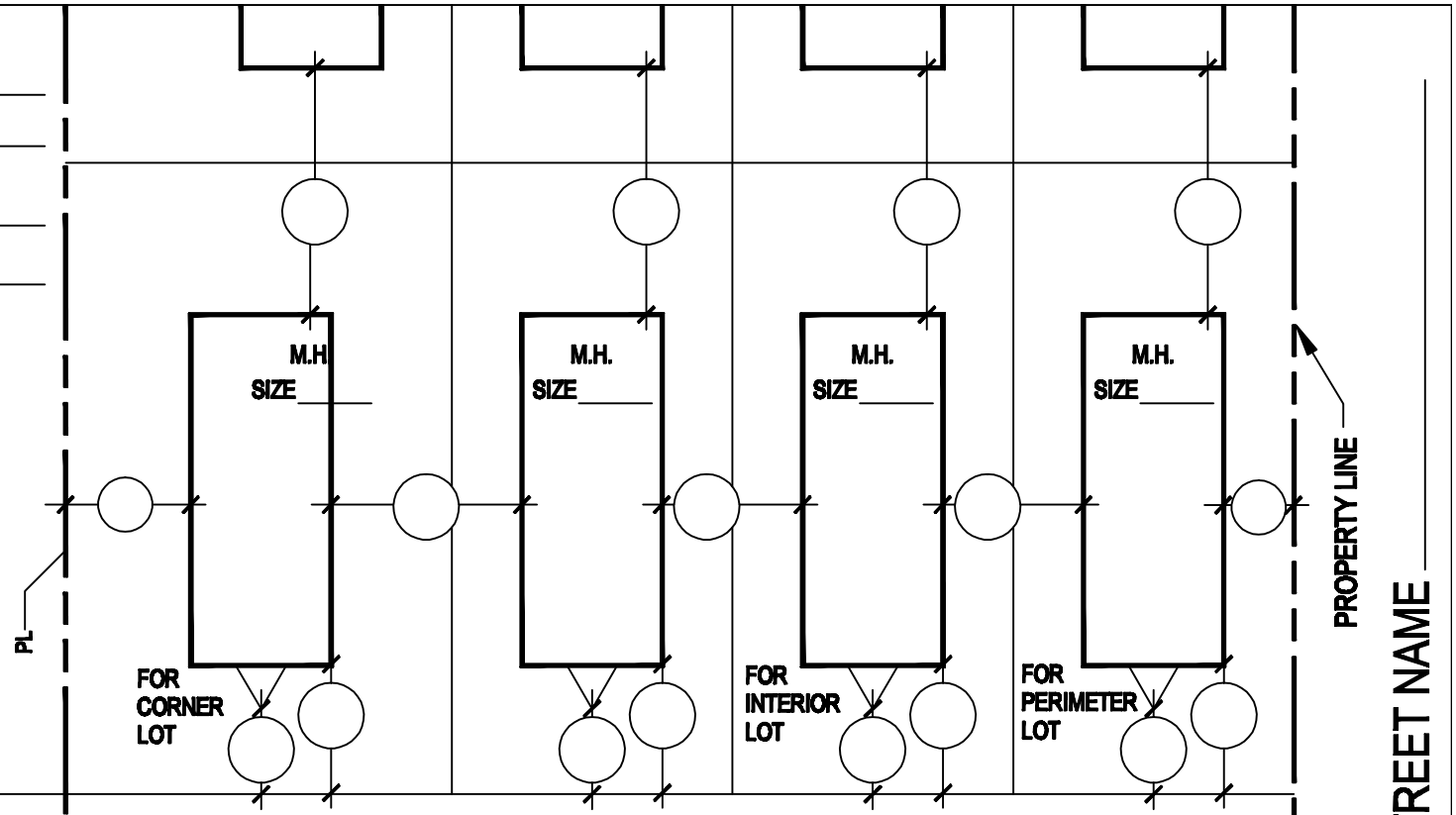

INTERIOR (DRIVE) PAAL

ACCESSORIES

_____ AC
_____ COOLER
_____ AWNING _____ x _____
_____ CARPORT
_____ SHED
_____ SKIRTING
_____ STEPS

INTERIOR (DRIVE) PAAL

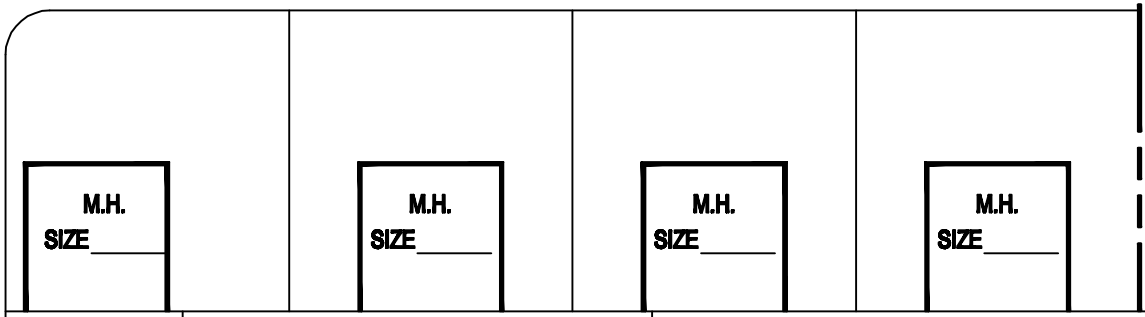

NORTH
ARROW

RESIDENTIAL REVIEW SECTION

FLOODPLAIN REVIEW SECTION

M. H. PARK NAME: _____

_____

ADDRESS: _____

SPACE NUMBER: _____

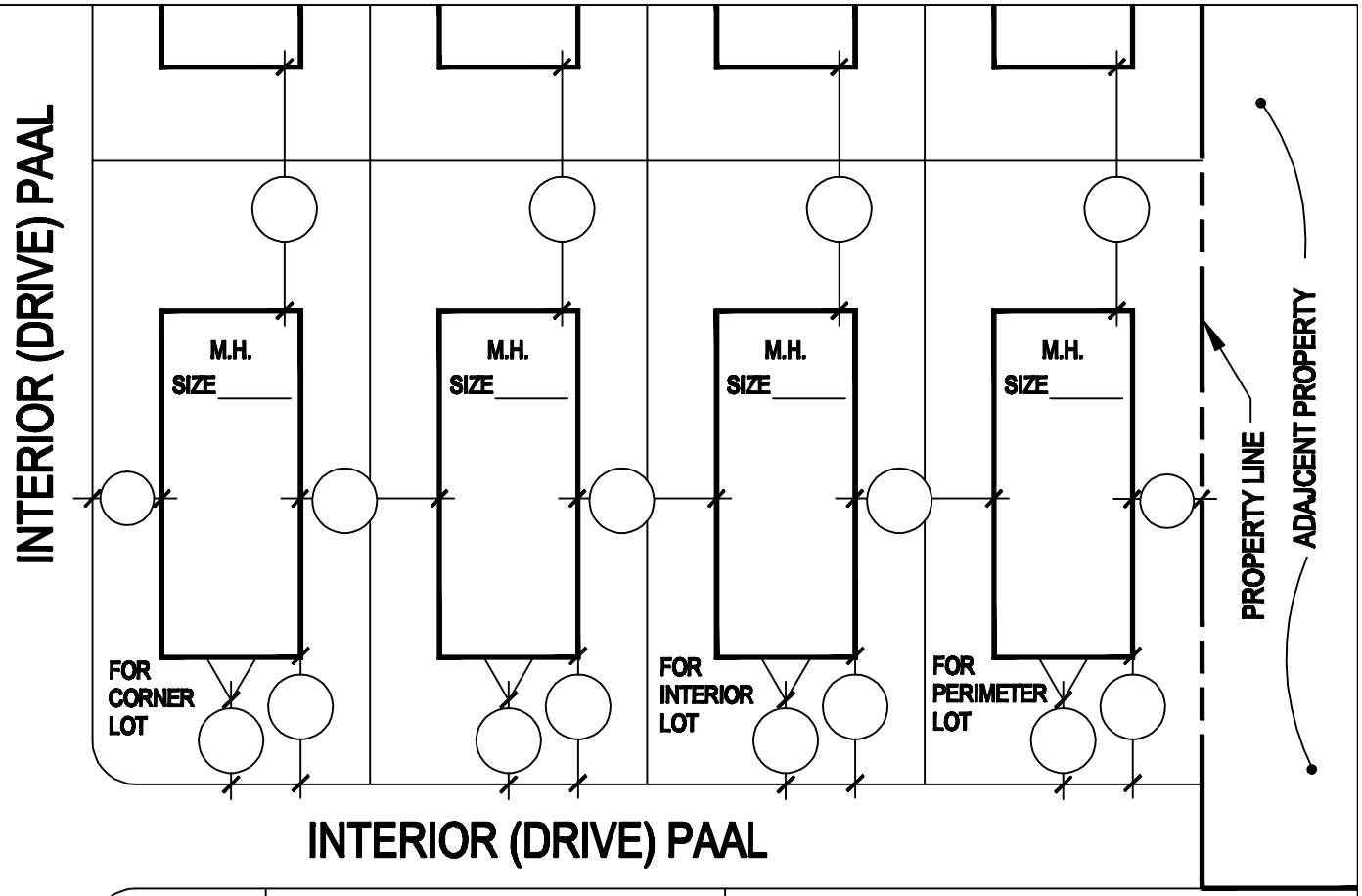

ACCESSORIES

_____ AC
_____ COOLER
_____ AWNING _____ x _____
_____ CARPORT
_____ SHED
_____ SKIRTING
_____ STEPS

NORTH ARROW

FLOODPLAIN REVIEW SECTION

RESIDENTIAL REVIEW SECTION

ZONING REVIEW SECTION

STREET NAME _____ OR ADJACENT PARCEL

CURB

PROPERTY LINE

D.W.

M. H. PARK NAME: _____

_____

ADDRESS: _____

SPACE NUMBER: _____

M.H. SIZE_____

M.H. SIZE_____

M.H. SIZE_____

M.H. SIZE_____

FOR CORNER LOT

FOR INTERIOR LOT

FOR PERIMETER LOT

PROPERTY LINE

ADJACENT PROPERTY

INTERIOR (DRIVE) PAAL

ACCESSORIES

_____ AC

_____ COOLER

_____ AWNING _____ x _____

_____ CARPORT

_____ SHED

_____ SKIRTING

_____ STEPS

STREET NAME

NORTH ARROW

FLOODPLAIN REVIEW SECTION

RESIDENTIAL REVIEW SECTION

ZONING REVIEW SECTION

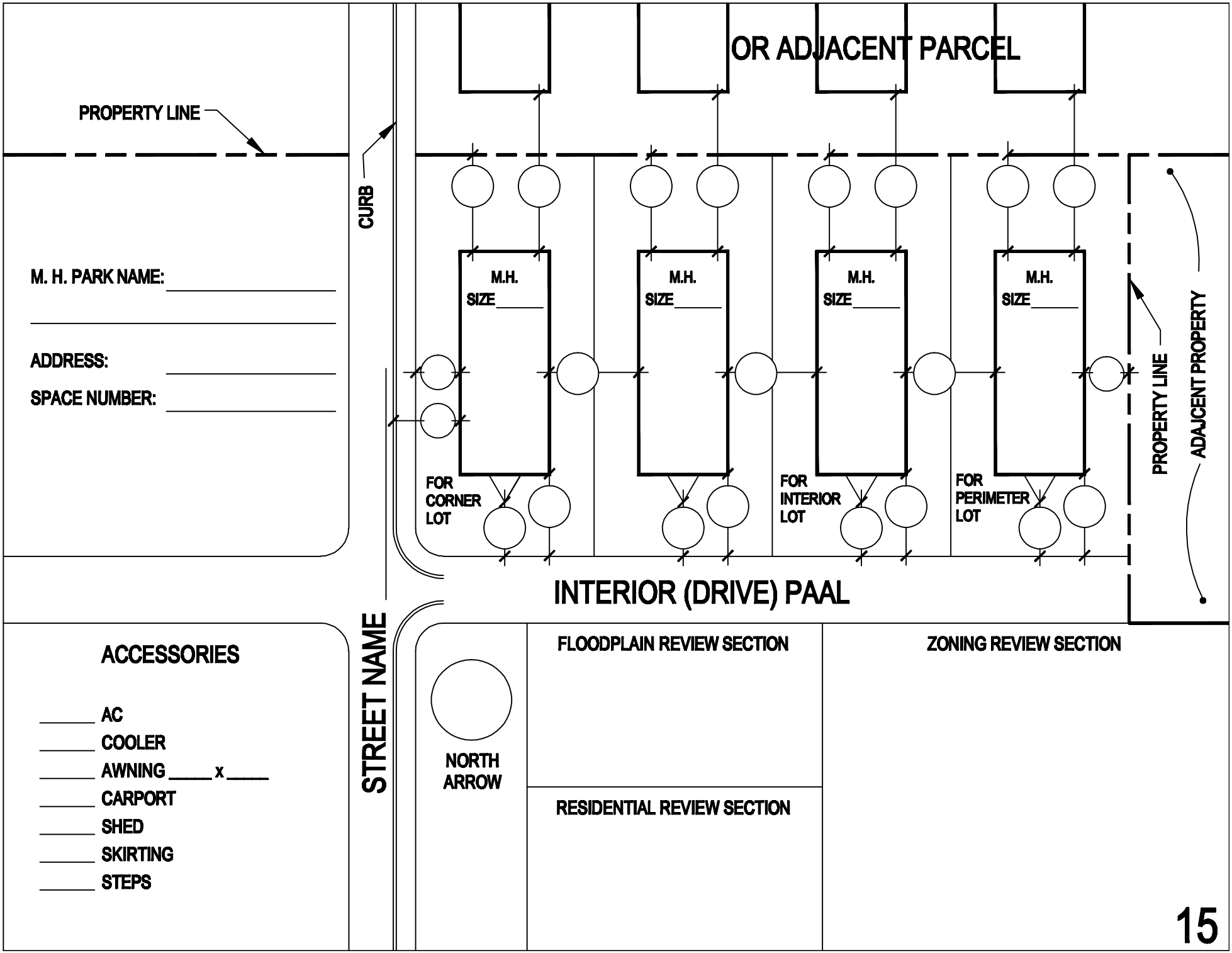
OR ADJACENT PARCEL
PROPERTY LINE
CURB
M. H. PARK NAME:
ADDRESS:
SPACE NUMBER:
M.H.
SIZE
FOR CORNER LOT
FOR INTERIOR LOT
FOR PERIMETER LOT
PROPERTY LINE
ADJACENT PROPERTY
INTERIOR (DRIVE) PAAL
STREET NAME
ACCESSORIES
AC
COOLER
AWNING x
CARPORT
SHED
SKIRTING
STEPS
NORTH ARROW
FLOODPLAIN REVIEW SECTION
RESIDENTIAL REVIEW SECTION
ZONING REVIEW SECTION

M. H. PARK NAME: _____

_____

ADDRESS: _____

SPACE NUMBER: _____

ACCESSORIES

_____ AC
_____ COOLER
_____ AWNING _____ x _____
_____ CARPORT
_____ SHED
_____ SKIRTING
_____ STEPS

ZONING REVIEW SECTION

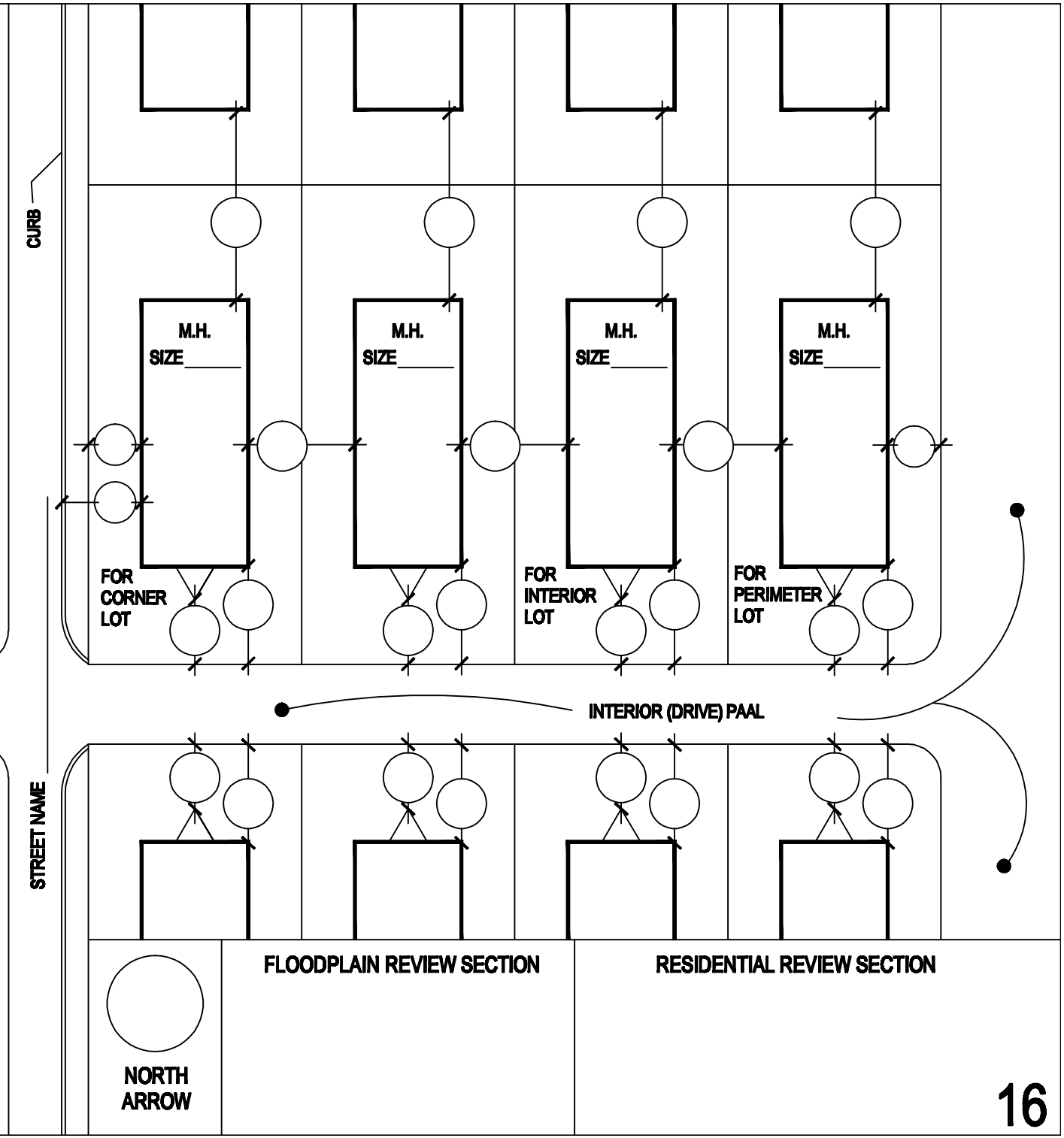

M. H. PARK NAME: _____

_____

ADDRESS: _____

SPACE NUMBER: _____

ACCESSORIES

_____ AC
_____ COOLER
_____ AWNING _____ x _____
_____ CARPORT
_____ SHED
_____ SKIRTING
_____ STEPS

ZONING REVIEW SECTION

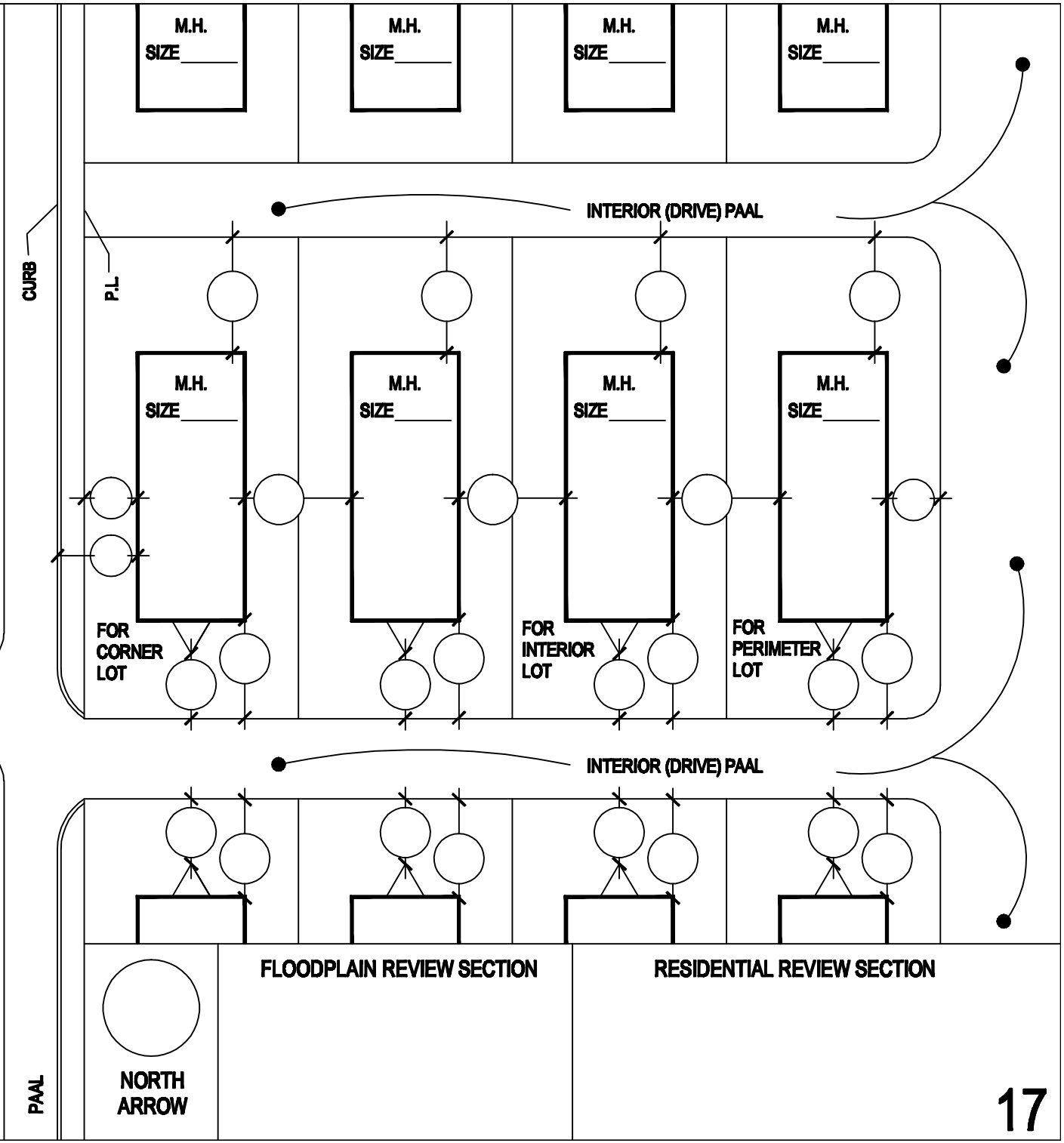

M. H. PARK NAME: _____

_____

ADDRESS: _____

SPACE NUMBER: _____

ACCESSORIES

_____ AC
_____ COOLER
_____ AWNING _____ x _____
_____ CARPORT
_____ SHED
_____ SKIRTING
_____ STEPS

INTERIOR (DRIVE) PAAL

ZONING REVIEW SECTION

INTERIOR (DRIVE) PAAL

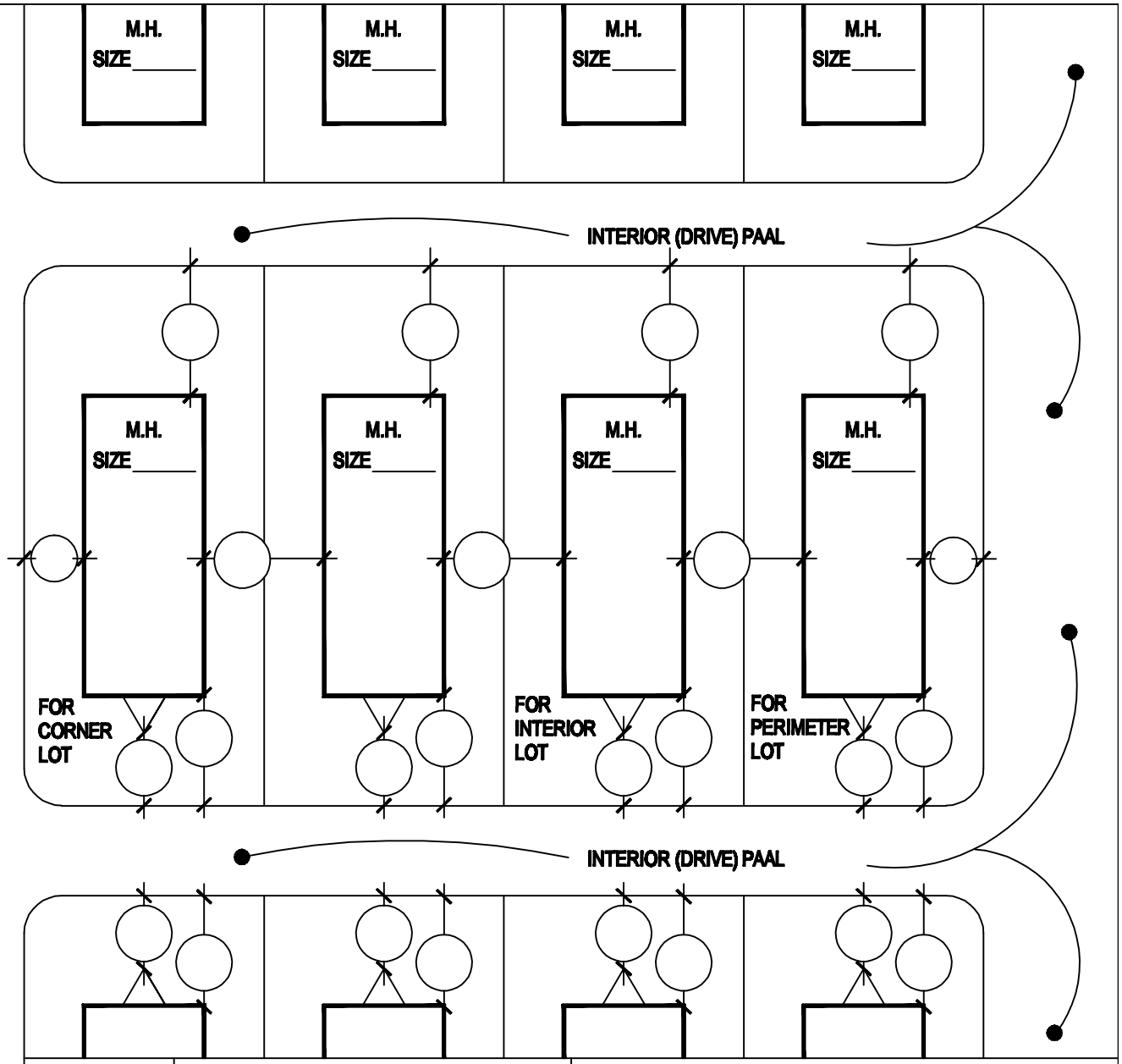

NORTH ARROW

FLOODPLAIN REVIEW SECTION

RESIDENTIAL REVIEW SECTION

M. H. PARK NAME: _____

_____

ADDRESS: _____

SPACE NUMBER: _____

ACCESSORIES

_____ AC
_____ COOLER
_____ AWNING _____ x _____
_____ CARPORT
_____ SHED
_____ SKIRTING
_____ STEPS

ZONING REVIEW SECTION

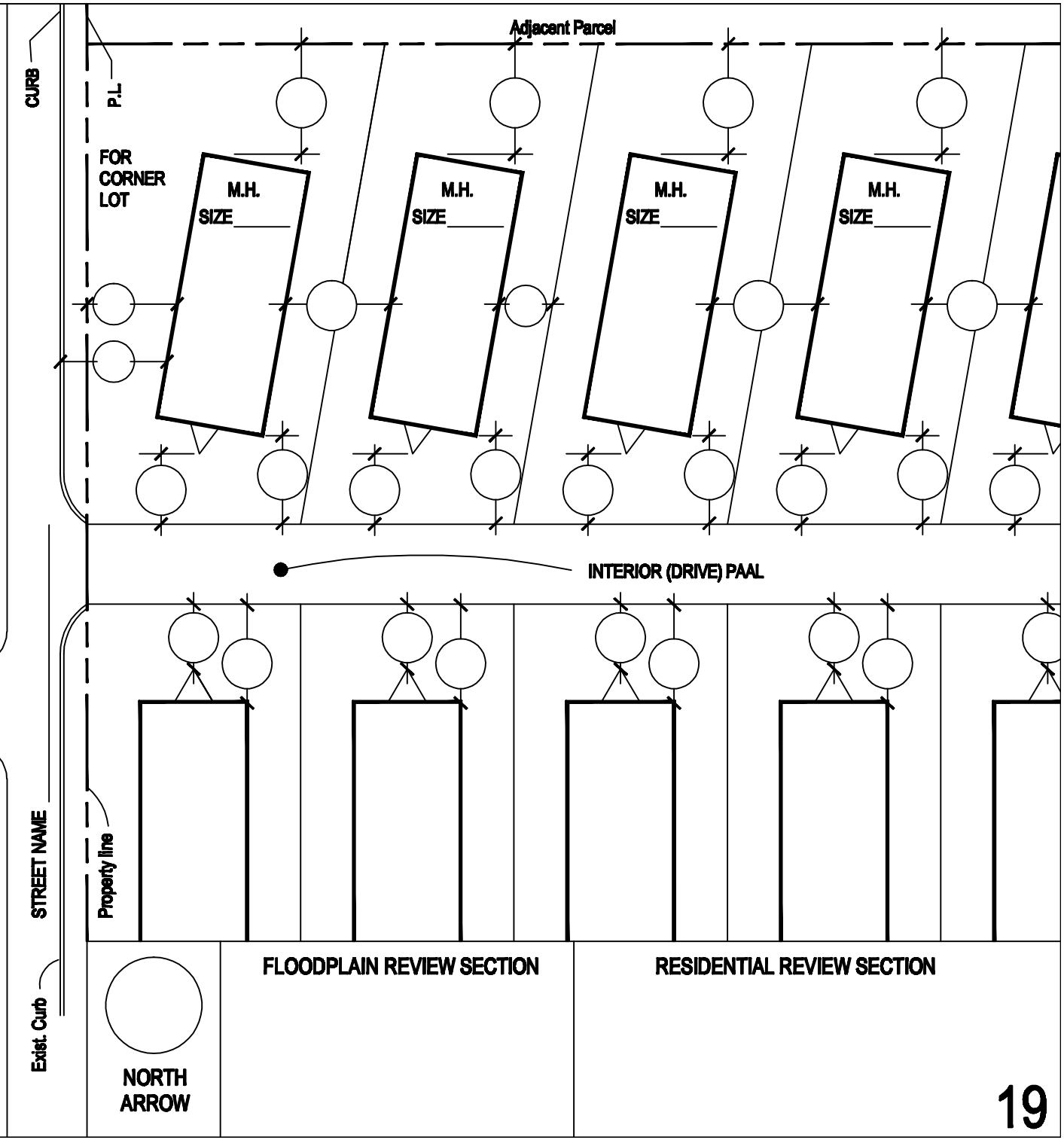

M. H. PARK NAME: _____

_____

ADDRESS: _____

SPACE NUMBER: _____

ACCESSORIES

_____ AC
_____ COOLER
_____ AWNING _____ x _____
_____ CARPORT
_____ SHED
_____ SKIRTING
_____ STEPS

Street _____

ZONING REVIEW SECTION