NOTE:

1. SITE PLAN RENDERING DERIVED FROM DETAILS PROVIDED BY SURVEY.

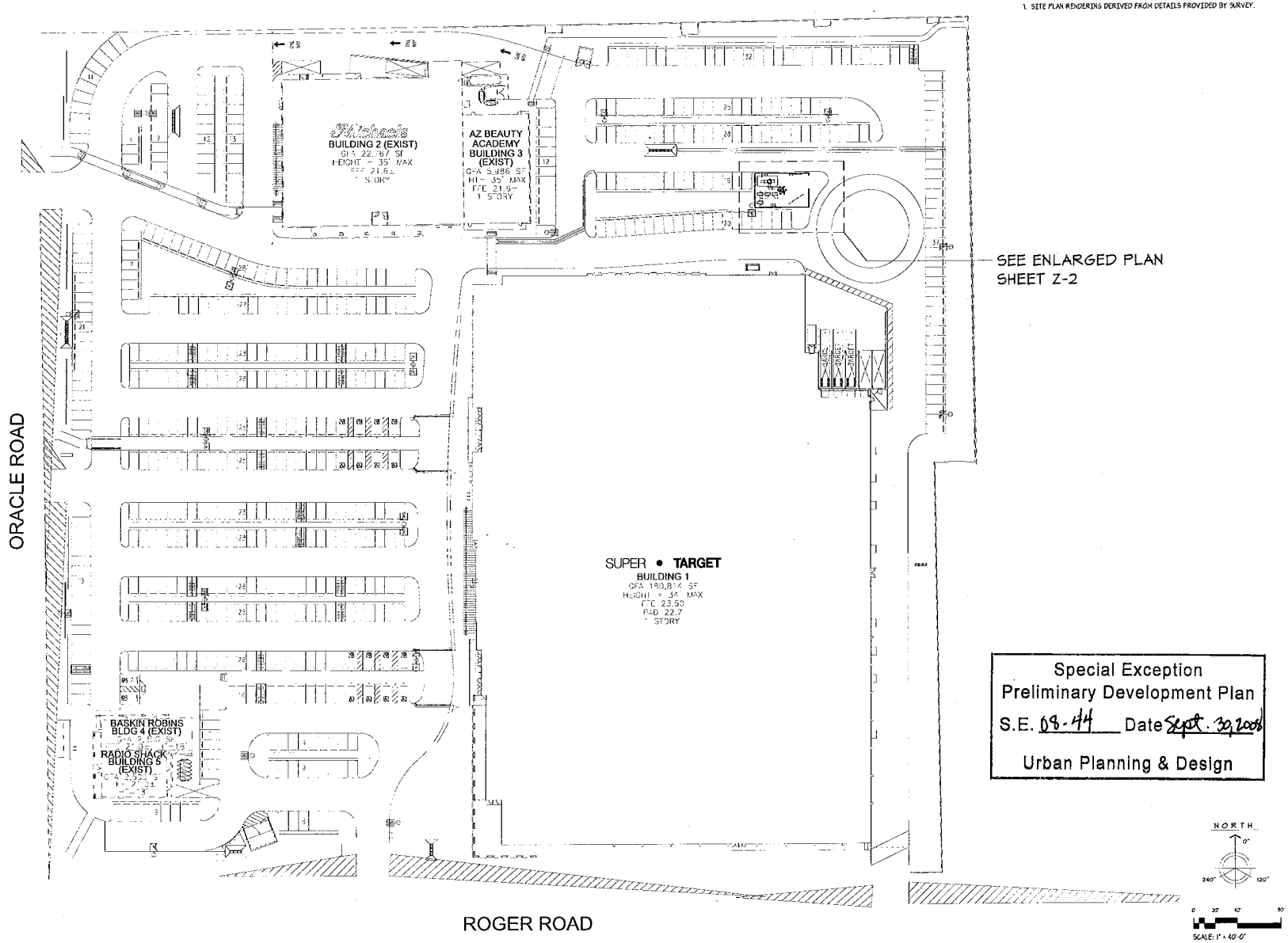

Special Exception
Preliminary Development Plan
S.E. 08-44 Date Sept. 30, 2008
Urban Planning & Design

OVERALL ARCHITECTURAL SITE PLAN

CLIENT
CROWN CASTLE INTERNATIONAL

PLANS PREPARED BY
young design corp
architecture / project management
10245 E. Via Linda, Scottsdale, AZ 85258
ph: 480 451 9609 fax: 480 451 9608
e mail: corp@ydcoffice.com

SEAL
This drawing is copyrighted and the property of Young Design Corporation (YDC) & produced solely by YDC and affiliates. reproduction or use of this drawing and/or the information contained hereon is forbidden without written permission by Young Design Corporation.

REGISTERED ARCHITECT CERTIFICATE NO. 19357 RONALD C. YOUNG ARIZONA U.S.A.
EXPIRES 12/31/10

NO.	DATE	DESCRIPTION
1	7/28/08	REVIEW
2	9/25/08	FINALS
3	10/01/08	COMMENTS

ARCHITECTS JOB NO.
YDC-1301

PROJECT INFORMATION
879323
CROWN - ICE T
260 W. ROGER RD.
TUCSON, AZ. 85705

SHEET TITLE
OVERALL SITE PLAN

JURISDICTION APPROVAL

SHEET NUMBER
Z-1

NOT USED | 4

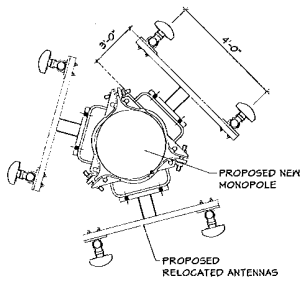

ALLTEL ANTENNA CONFIGURATION | 3

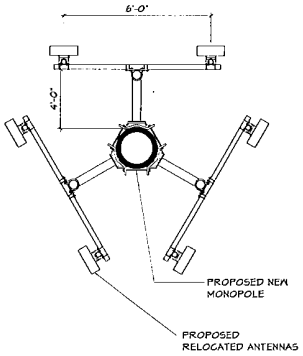

SPRINT ANTENNA CONFIGURATION | 2

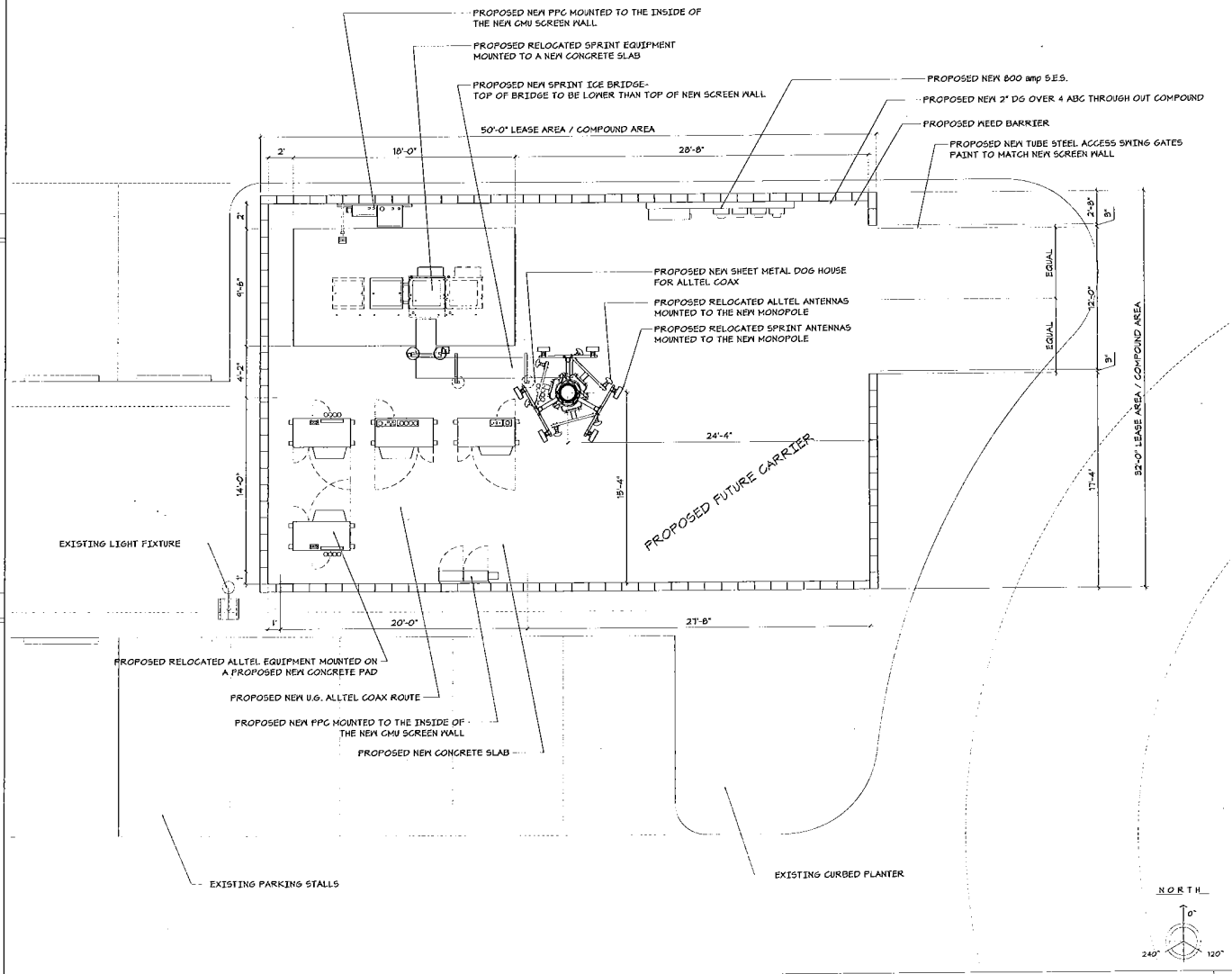

ENLARGED SITE PLAN | 1

CLIENT

CROWN CASTLE INTERNATIONAL

PLANS PREPARED BY

young design corp
architecture / project management
10245 E. Via Linda, Scottsdale, AZ 85258
ph: 480 451 9609 fax: 480 451 9608
e mail: corp@ydcoffice.com

SEAL

This drawing is copyrighted and the property of Young Design Corporation (YDC) & produced solely by YDC and affiliates. reproduction or use of this drawing and/or the information contained hereon is forbidden without written permission by Young Design Corporation.

REGISTERED ARCHITECT CERTIFICATE NO. 19382 RONALD C. YOUNG ARIZONA U.S.A.
EXPIRES 12/31/10
THIS DRAWING IS NOT VALID WITHOUT AN ORIGINAL SIGNATURE PURSUANT TO A.R.S. TITLE 41 AND A.A.C. R4-1-1 & V-V3 REGA FOR ANY PERSON, UNLESS UNDER THE DIRECT SUPERVISION OF THE ARCHITECT, TO VERIFY THIS DOCUMENT IN ANY WAY.

NO	DATE	DESCRIPTION
1	7/28/08	REVIEW
2	9/25/08	FINALS
3	10/01/08	COMMENTS

ARCHITECTS JOB NO.
YDC-1301

PROJECT INFORMATION

879323

CROWN - ICE T

260 W. ROGER RD.
TUCSON, AZ. 85705

SHEET TITLE

ENLARGED SITE PLAN
SITE DETAILS

JURISDICTION APPROVAL

SHEET NUMBER

Z-2

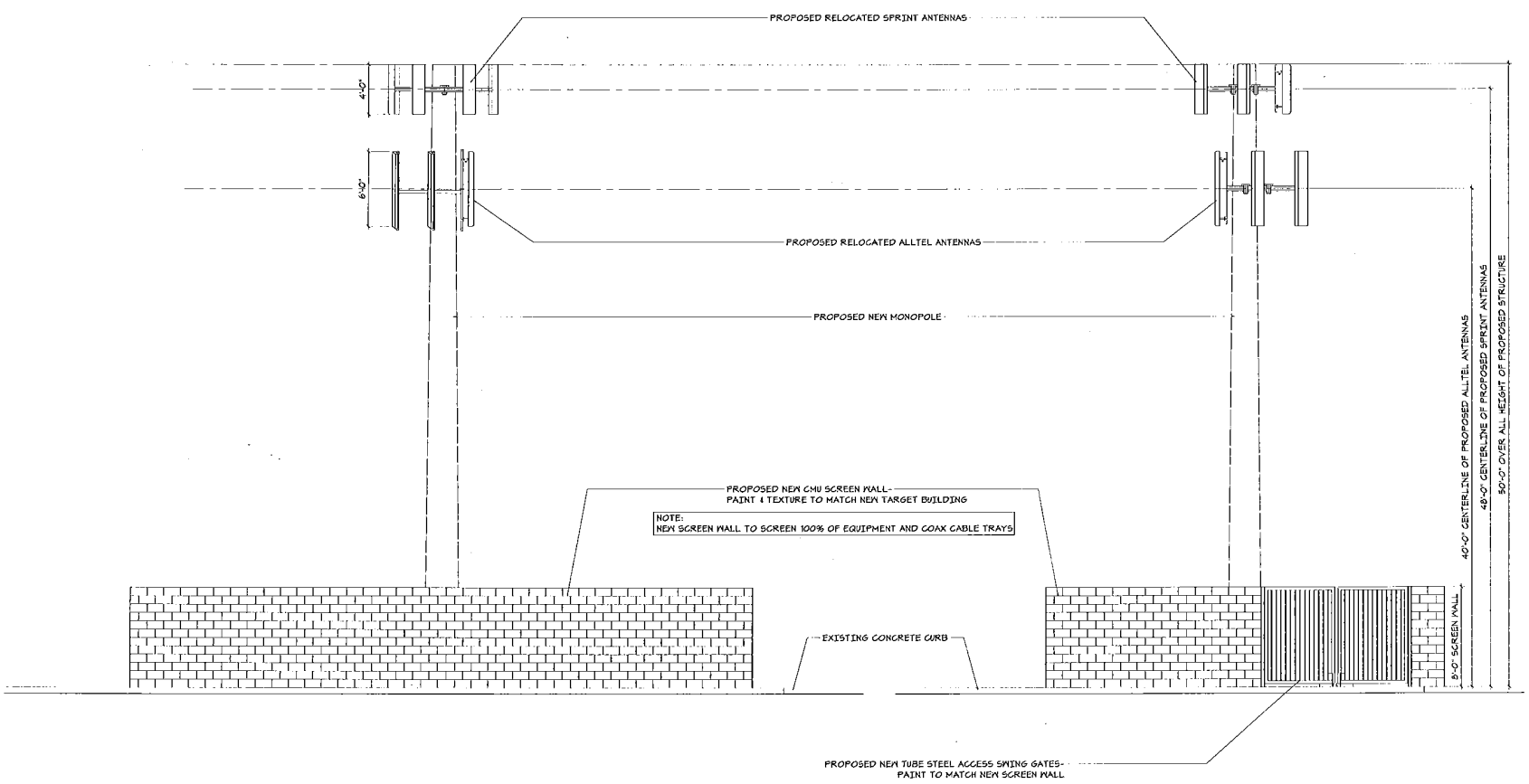

NORTH ELEVATION

0 2' 4' 8'

SCALE: 1/4" = 1'-0"

EAST ELEVATION

0 2' 4' 8'

SCALE: 1/4" = 1'-0"

SITE ELEVATIONS

CLIENT

CROWN CASTLE INTERNATIONAL

PLANS PREPARED BY

young design corp

architecture / project management
10245 E. Via Linda, Scottsdale, AZ 85258
ph: 480 451 9609 fax: 480 451 9608
e mail: corp@ydcoffice.com

SEAL

This drawing is copyrighted and the property of Young Design Corporation (YDC) & produced solely by YDC and affiliates. reproduction or use of this drawing and/or the information contained hereon is forbidden without written permission by Young Design Corporation.

REGISTERED ARCHITECT CERTIFICATE NO. 19382 RONALD C. YOUNG JR. ARIZONA U.S.A.

EXPIRES 12/31/10

THIS DOCUMENT CONTAINS AN ELECTRONIC SIGNATURE PER ARS 32-3056 & ARS TITLE 41 AND TITLE 44 OF R.L.A. AND ATTEST FOR ANY PERSON UNLESS UNDER THE DIRECT SUPERVISION OF THE REGISTRANT, TO VERIFY THIS DOCUMENT IN ANY WAY.

NO.	DATE	DESCRIPTION
1	7/28/09	REVIEW
2	9/25/09	FINALS
3	10/01/09	COMMENTS

ARCHITECTS JOB NO.

YDC-1301

PROJECT INFORMATION

879323

CROWN - ICE T

260 W. ROGER RD.
TUCSON, AZ. 85705

SHEET TITLE

ELEVATIONS

JURISDICTION APPROVAL

SHEET NUMBER

Z-3