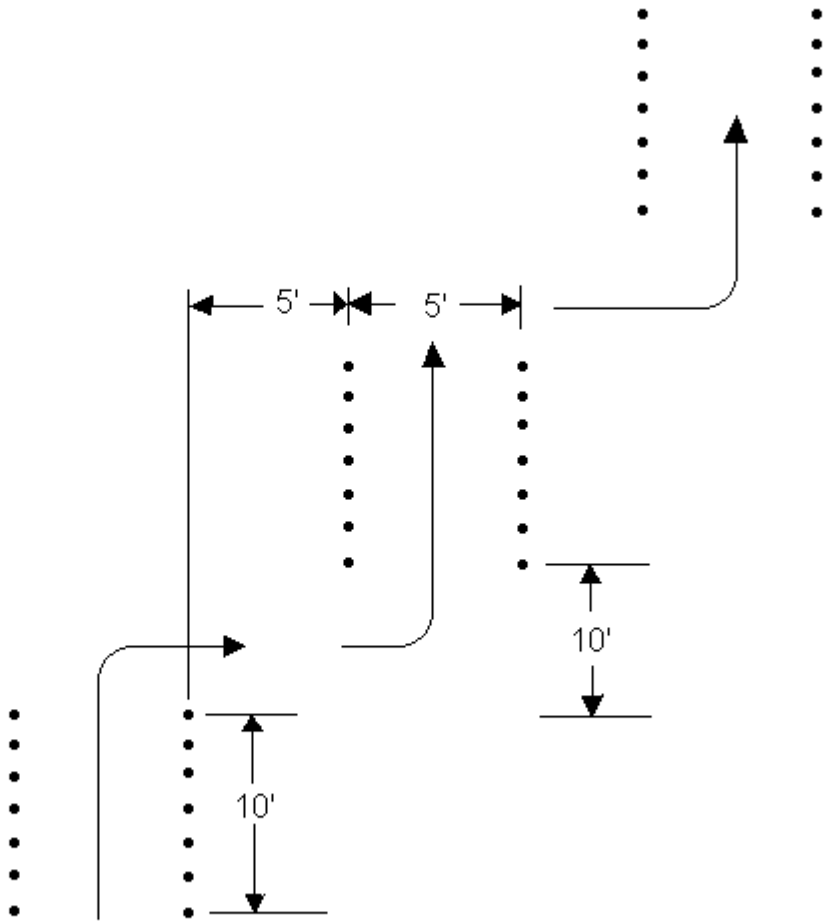Obstacle Course Lane Change