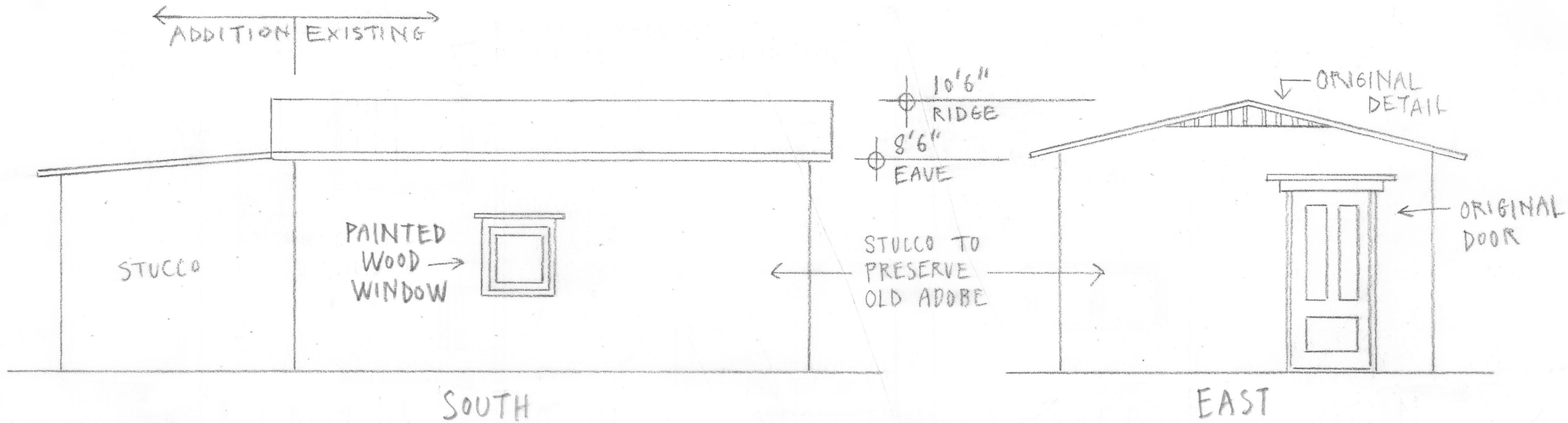

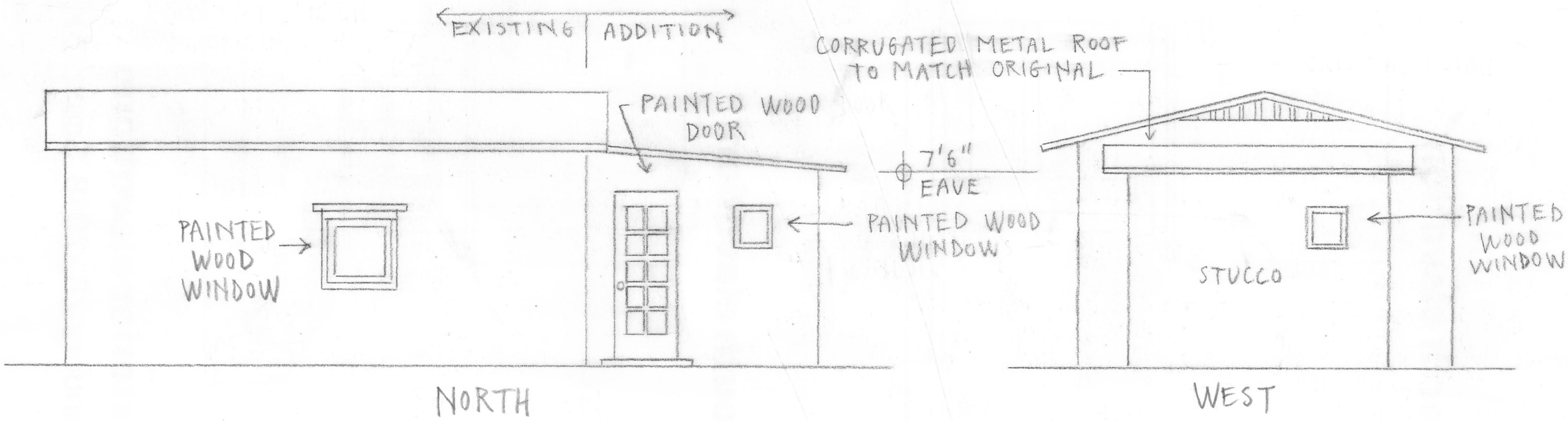

ELEVATIONS

1/4" = 1'0"

822 South 3rd Avenue Tucson, AZ

DATE 6.1.21