General
All work shall conform to the requirements of the City of Tucson / Pima County, Standard Specifications for Public Improvements, 2003 Edition

Structural Steel
All Structural shapes and plates shall conform to ASTM A36 (FY = 36000 PSI).
All Structural square or rectangular tube shapes shall conform to ASTM A500, Grade B (FY = 46000 PSI).

All welding electrodes shall conform to ASTM A233 and AWS A5.2, Grade E-70XX.
All welds sized per *AISC Code of Standard Practice for Steel Buildings and Bridges*.

Verticals: 2" square steel tubing, 11 gauge wall thickness.

Horizontals: 1-1/2" square steel tubing, 14 gauge wall thickness.

Finish: Railing to be painted, color ICI #1140 "Gloucester Green".
Reference Section 610 of the Standard Specifications.

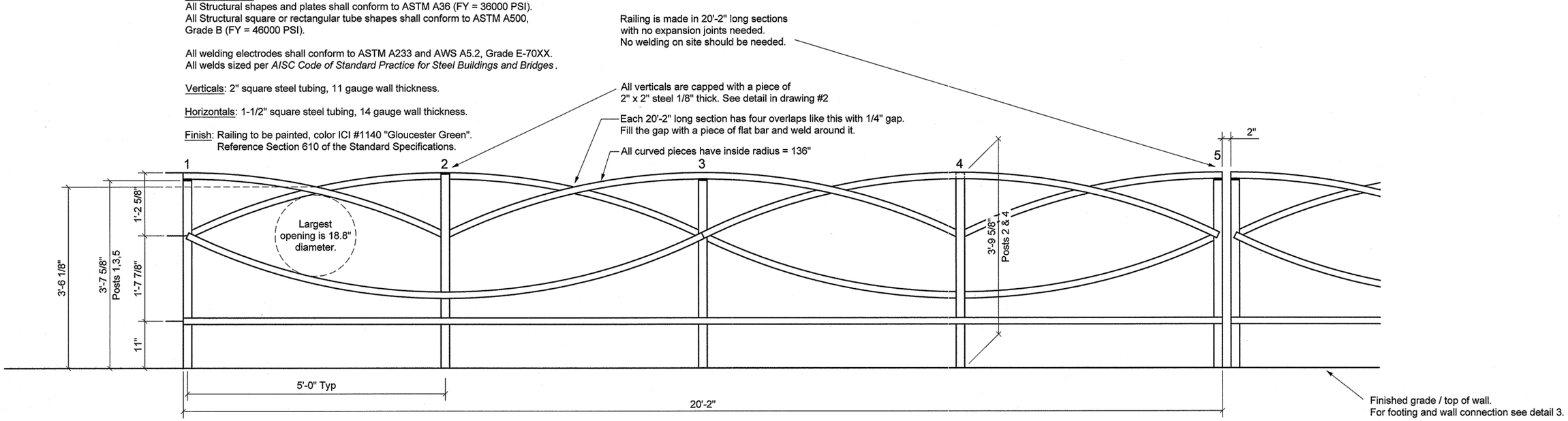

1

Artist Rail for Houghton Corridor. Scale: 1" = 1'-0"

Fence is composed of square tube lying on top of each other in three planes:

- closer to pedestrians
- central plane (in line with verticals)
- farther from pedestrians

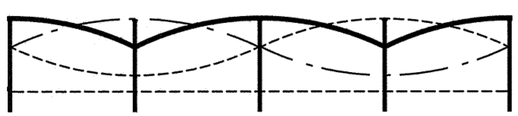

2

Rail overlap scheme. Not to scale.

In soil:

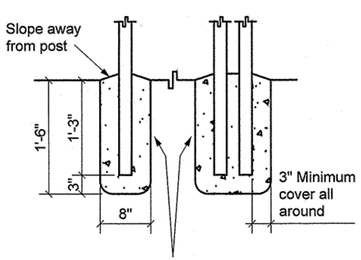

In walls:

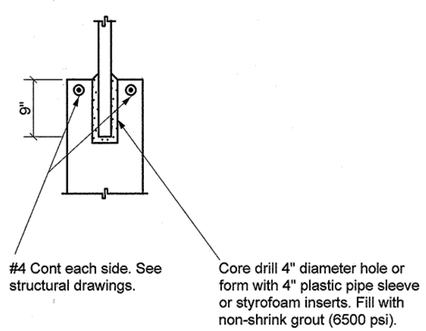

3

Embedment details. Scale: 1" = 1'-0"

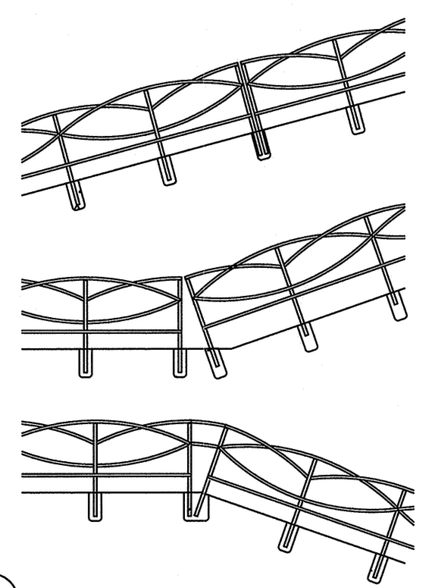

On a slope, simply put the verticals perpendicular to the ground plane. This allows shop fabrication and easy installation.

To deal with an acute angle, keep the top of the rails even with each other, adjusting the depths as needed. There is room in the conservative design to vary the installation height while still maintaining an adequate opening size.

To deal with an obtuse angle, weld a short piece of curved 1-1/4" square tube between sections in the field. This is the only field work that needs to be done.

4

Strategies for dealing with slope, varying terrain. Scale: 1/4" = 1'-0"

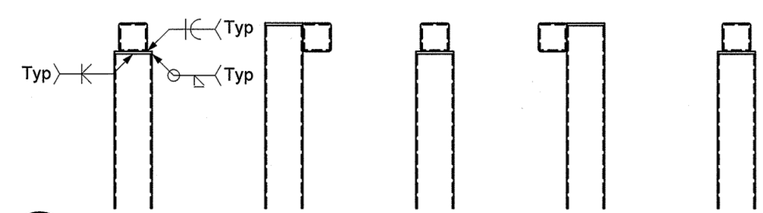

5

Alignment of rails. Scale: 3" = 1'-0"

MY SEAL DENOTES ONLY THAT I HAVE REVIEWED THIS DRAWING AND IT MEETS WITH THE INTENT OF MY CALCULATIONS FOR STRUCTURAL ITEMS ONLY

Registered Professional Engineer (Structural) CERTIFICATE NO. 12524 DAN RICHARD LUNDWALL 3-10-11 Date Signed
EXPIRES 6/30/2012

DETAIL K

Barricade Railing

Two working days before you dig. CALL FOR THE BLUE STAKES 1-800-STAKE-IT Blue Stake Center CALL COLLECT

NO.	DATE	REVISION	BY	CHKD.	APPR.

PSOMAS
800 E. Weimore Road, Suite 110
Tucson, AZ 85719
(520) 292-2300 (520) 292-1290 fax
www.psomas.com

DEPARTMENT OF TRANSPORTATION/ENGINEERING DIVISION

HOUGHTON ROAD
IRVINGTON RD TO VALENCIA RD

DT16 OF DT16

CITY OF TUCSON

DRWN. BY Joe O'Connell	3/11	REF.	SCALE: H: V:
DSGN. BY Joe O'Connell	3/11		
CHKD. BY DRL	3/11	PLAN NO. I-2007-001	

41 OF 312

SCI No. 06254BS1 – 12