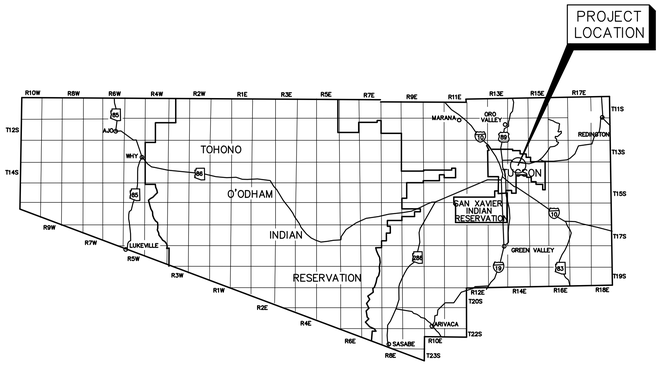

CITY OF TUCSON, ARIZONA

PIMA PEDESTRIAN PATH

PIMA STREET, ALVERNON WAY TO COLUMBUS BOULEVARD

PEDESTRIAN PATHWAY TRANSPORTATION ENHANCEMENT

COT Job No. S01J

COT PLAN No. U-2014-021

PCRWRD-UC TRACKING NO. UPC-2014-198

PROPOSED CONSTRUCTION ON NORTH SIDE OF PIMA STREET BEGINS JUST EAST OF ALVERNON WAY AND ENDS JUST WEST OF COLUMBUS BOULEVARD. THE 0.5 MILES OF ROADWAY IMPROVEMENTS INCLUDE SIDEWALK AND ACCESS RAMPS, ONE-WAY FRONTAGE ROAD, BUS PULLOUT, AND LANDSCAPING WITH WATER HARVESTING.

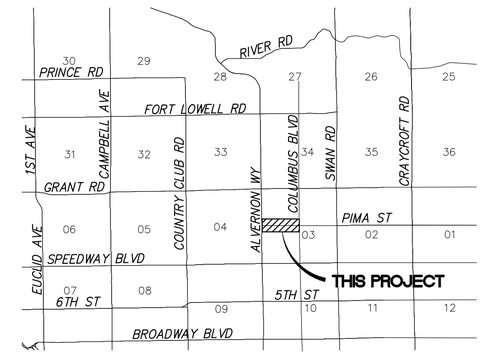

LOCATION MAP

Section 03, T-14-S, R-14-E,
G and S R M
Pima County, Arizona
Scale: 1"=1 Mile

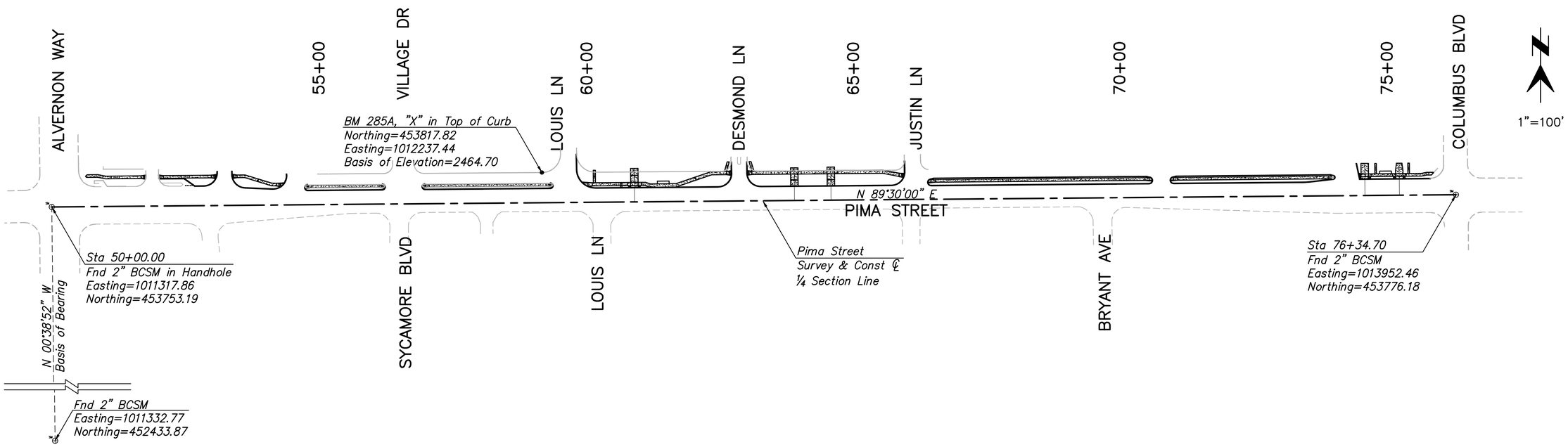

INDEX OF SHEETS

Page No.	Sheet No.	Sheet Description
1	CV 1	Cover Sheet
2	NT 1	General Notes Sheet
3	DS 1	Design Sheet
4	TY 1	Typical Section Sheet
5	DT 1	Civil Detail Sheet
6–8	RP 1–3	Roadway Plan Sheets
9–10	DW 1–2	Driveway Plan and Profile Sheets
11–13	PM 1–3	Signing and Pavement Marking Sheets
14–16	SW 1–3	Stormwater Pollution Prevention Plans
17–22	L 1–6	Landscape Sheets

UPC–2014–198

NO.	DATE	REVISION	BY	CHKD.	APPR.

Call at least two full working days before you begin excavation.
ARIZONA 811
Arizona Blue Stake, Inc.
Dial 8-1-1 or 1-800-STAKE-IT (782-5348)
In Maricopa County: (602) 263-1100

COVER SHEET

PSOMAS
333 E. Wetmore Road, Suite 450
Tucson, AZ 85705
(520) 292-2300 (520) 292-1290 fax
www.psomas.com

DEPARTMENT OF TRANSPORTATION/ENGINEERING DIVISION

CITY OF TUCSON

PIMA PEDESTRIAN PATH
ALVERNON WAY TO COLUMBUS BOULEVARD

90% PRELIMINARY NOT FOR CONSTRUCTION

APPROVALS	SIGNATORY	DATE
ENGINEERING ADMINISTRATOR		
TRAFFIC ADMINISTRATOR		
LANDSCAPE ARCHITECT		

APPROVED _____20__

TRANPORTATION DIRECTOR

REF. _____ SCALE: _____

DRWN. BY CZ 11/14 DSGN. BY CZ 11/14 CHKD. BY AA 04/15

PLAN NO. U–2014–021

GENERAL NOTES

1. BASIS OF BEARING:
   The monument line of Alvernon Way, between a 2" Brass Cap Survey Monument (BCSM) in handhole at Pima Street and a 2" BCSM at Fairmount Street, as recorded in record of survey SEQ. No. 20132250600. Said bearing being: N 00°38'52" W at a distance of 1319.40 feet.

   BASIS OF ELEVATION:
   Benchmark No. 285A as recorded in City of Tucson Survey Field Book 1989A–1, Page 18, being a chiseled "X" in the top of curb at the northwest (west) corner curb return at Pima Street and Louis Lane. Said elevation being: 2464.70 feet NAVD88.

2. This project has been designed by use of the AASHTO Policy on Geometric Design of Highways and Streets, Sixth Edition, 2011, and the Pima County/City of Tucson Standard Specifications (SSPI) and Details for Public Improvements (SDPI), 2003 editions. The SSPI and SDPI Manuals are on file at 201N. Stone Ave., Tucson, AZ, 85726. The said specifications and details may be modified or supplemented as shown or indicated in these plans and/or special provisions.

3. Right–of–way encroachments shall be removed by the contractor as directed by the Engineer and will be paid for under Removal of Structures and Obstructions.

4. All construction activities and test methods shall conform to the PC/COT SSPI and SDPI, 2003 editions. Said manuals are on file at 201 N. Stone Avenue, Tucson, AZ 85726–7201. The said specifications and details may be modified or supplemented as shown or indicated in these plans and Special Provisions.

5. The contractor shall comply with all applicable Occupational Safety and Health Administration regulations, in particular, the shoring and/or bracing of trenches.

6. The contractor shall obtain all permits required by governmental agencies before undertaking construction activities of any type within the public right–of–way.

7. The contractor shall be responsible for the care and maintenance of existing improvements, facilities, and vegetation within the work area which have been removed or damaged during the course of construction. Pavement, curb, access ramps, curb, walls, sidewalk, signs, fencing, and any other improvements damaged during construction are to be replaced or repaired by the contractor at no cost to the City. Any underground pipes, irrigation facilities, drains, structures, or obstructions designated on the plans to remain, when encountered, shall be moved, altered, or repaired by the contractor as directed by the Engineer and shall be considered incidental to the cost of the contract. All repair, replacement, and/or cleanup shall be accomplished to the satisfaction of the Engineer.

8. The contractor is responsible for complying with all regulations and requests by the Engineer regarding dust pollution. It shall be the contractor's responsibility to furnish, haul and apply all water required for compaction and for the control of dust from construction activity. The cost shall be considered as incidental to the related items of work as called for in the bidding schedule.

9. Upon commencement of work, traffic control devices shall be posted and maintained by the contractor until such a time as the work is complete. All warning signs, barricades, etc. shall be in accordance with the Manual on Uniform Traffic Control Devices 2009 Edition and as approved by the Engineer.

10. The contractor shall be responsible to maintain safe and reasonable access for the public transit system users and other pedestrians during construction activities. Access shall be maintained through the construction zone on a paved pathway to the extent possible. If pedestrians must be detoured around the construction site, the detour shall be clearly marked and understandable to the user. If pedestrians are forced to cross a street due to a detour, they shall be directed to a logical pedestrian crossing. Access shall be approved by the Engineer prior to implementation and must be ADA compliant. The contractor shall be responsible for providing temporary bus stops if the permanent bus stop signage is removed or access is prohibited due to construction activity. The contractor shall notify Sun Tran (Bea Paulus, 623–4301) 48 hours prior to the construction or removal of any existing bus stops.

11. Access shall be maintained to all businesses, residences, and side streets at all times except when otherwise approved by the Engineer.

12. Utility locations, as shown on the plans, were compiled based on the best information available. Utility locations are not intended to be exact or complete. Prior to commencing construction the contractor shall verify the location of all utilities with the appropriate organizations. It shall be the responsibility of the contractor to protect all existing utilities in place that are not shown on the project plans to be relocated or modified. With the approval of the Engineer and the Owner of the utility, the contractor may remove and replace or relocate existing utilities for his convenience; no separate measurement and payment will be made for this work, as the cost will be considered as included in the contract price for the various bid items in which this work is incidental. Contact "Blue Stake" 1–800–782–5348, two full working days prior to beginning construction. Saturday and Sunday are not considered working days. The contractor shall include all utilities on Blue State ticket

13. Removal of all cacti and native plants shall be in accordance with the provisions of the "Arizona Native Plant Law," A.R.S, Chapter 7.

14. The project roadway shall be striped by the contractor in accordance with the details shown in the project plans and with the PC/COT Pavement Marking Design Manual, 2008.

15. All existing manhole frames and covers, survey monuments, water valves, etc. shall be adjusted to match finished grade where applicable and as directed by the Engineer. This work shall be considered as incidental to the related items of work, except when the bidding schedule contains specific items on a unit basis.

16. Various grading operations may be necessary at and around existing utility pole facilities. The cost will be considered as incidental to the related items of work as called for in the bidding schedule.

17. All existing signs to be removed as part of this project are to be delivered to the City of Tucson Sign Shop at 4004 S. Park (791–3154). The contractor is responsible for loading and unloading the salvaged material.

18. Depressed curb will be considered as included in the contract price for concrete curb.

19. All stationing is along the construction centerline and all measurements, including curb radii, are measured to the face of curb per PC/COT standard details unless otherwise noted. The vertical curb control point is shown on the Design Sheet.

20. There will be no separate measurement or direct payment for saw cutting and/or wheel cutting. The cost will be considered as incidental to the related items of work as called for in the bidding schedule. In all cases where matching existing pavement, the contractor shall saw cut a one (1) foot neat edge and tack the existing pavement prior to joining the new pavement unless otherwise noted.

21. Inspection by the Engineer or City Representative of the work called for on the project plans shall not relieve the contractor and/or any sub–contractor of their obligation to perform the work in compliance with the plans, specifications, contract documents, codes, and any other applicable regulations pertaining thereto.

22. Quantities as shown on the bidding schedule are estimated. The contractor is advised that the final quantities of materials and work in place may differ from those indicated in the bidding schedule.

23. It is the responsibility of the contractor to verify the benchmarks and compare the site conditions with the plans. All elevations, alignments, and distances given shall be verified by an Arizona registered Land Surveyor before construction. The contractor shall notify the Engineer of any discrepancies observed, should any benchmark, grade, or design indicated on the plans be suspect. The Engineer shall be notified at least twenty–four (24) hours prior to construction being scheduled to begin in the area in question.

24. The contractor shall verify all existing conditions and dimensions before proceeding with construction. Should conditions exist which are contrary to those shown on the plans, the Engineer shall be notified prior to the start of construction in that area.

25. Southwest Gas (SWG) requires a minimum one (1) foot separation from distribution facilities and any proposed structures. SWG requires a standby when the contractor is working within ten (10) feet of gas facilities with a pipe diameter of six (6) inches or greater. The contractor must call 520–794–6021 to schedule the standby a minimum of twenty–four (24) hours in advance. The contractor must contact SWG for adjusting valves at least two (2) weeks prior to the start of construction by calling 520–794–6208. SWG will perform the adjustment.

26. The contractor shall contact COT DOT Landscape Architect (Gary Wittwer) at 837–6618 prior to the removal of landscape plants or irrigation materials not shown on the plans.

27. An accepted copy of this plan shall be kept in an easily accessible location on the site at all times during construction.

28. Immediately report any of the following to either PCRWRD Field Engineering (520–740–2651) or PCRWRD Conveyance Division (520–724–3400): Any release of the sewage, any damage to the public sanitary sewage system, or the dropping of debris into the public sanitary sewage system. On weekends, holidays, or between 5:00 P.M. and 7:00 A.M., immediately call PCRWRD Operations Control Center (520–724–6048) and request a PCRWRD representative to be dispatched to the site. Take immediate action to contain the sanitary sewage overflow (SSO) from the sewer system. The contractor shall be responsible for all costs to repair the system, for all expenses to mitigate the release and to disinfect the release areas and for any regulatory penalties levied on PCRWRD because the SSO entered a natural drainageway or storm water drainage system. The contractor shall repair all damage as directed and approved by PCRWRD.

29. House or business connection sewers (HCS or BCS) are not part of the public sanitary sewer conveyance system. Private connection sewers constructed prior to January 2006 are not required to be bluestaked. Any HCS/BCS encountered during construction shall be protected, repaired, or rerouted, as the situation dictates per PCRWRD SSDC 2012, Standard Detail RWRD 400 and at no expense to the property owner or PCRWRD.

30. Contractor shall maintain access to all sanitary sewer manhole structures at all times.

31. All tree placement must have a minimum eight–foot clearance from the tree center line to existing gas facilities. Shrubs and bushes may be planted within the eight–foot clearance zone.

32. All Storm Water Pollution Prevention Plan (SWPPP) measures shall be installed so as to prevent all storm water, construction water, fuels, chemicals, or liquids to be directed into or onto any sanitary sewer facilities. Protection of sanitary sewer facilities shall be a part of the approved construction SWPPP and best management practices. Protection devices shall be installed and maintained around all potentially affected sanitary sewer facilities within the project limits. Additional measures shall include but not be limited to the use of rain stoppers and manhole covers as deemed necessary by PCRWRD.

GENERAL NOTES & LEGEND SHEET UPC–2014–198

Call at least two full working days before you begin excavation. ARIZONA 811 Arizona Blue Stake, Inc. Dial 8-1-1 or 1-800-STAKE-IT (782-5348) In Maricopa County: (602) 263-1100

PSOMAS
333 E. Wetmore Road, Suite 450
Tucson, AZ 85705
(520) 292–2300 (520) 292–1290 fax
www.psomas.com

NO.	DATE	REVISION	BY	CHKD.	APPR.

90% PRELIMINARY NOT FOR CONSTRUCTION

DEPARTMENT OF TRANSPORTATION/ENGINEERING DIVISION

PIMA STREET
ALVERNON WAY TO COLUMBUS BOULEVARD
General Notes & Legend

CITY OF TUCSON

DRWN. BY CZ	11/14	REF.	SCALE: N/A
DSGN. BY CZ	11/14		N/A
CHKD. BY AA	04/15	PLAN NO. U–2014–021	

NT01 OF NT01

2 OF 22

I:\TUS\120107\TRANSP\SHEETS\Index\C-PSOINT01.dwg NT01 Chengqiang Zhang Thu, 16 Apr 2015, 4:57pm Last Saved By: Chengqiang.zhang

ABBREVIATIONS
(NOT INCLUDED IN PC/COT STD DTL 100)

APN	Assessor Parcel Number
PVMT	Pavement
EXST	Existing

LEGEND
(NOT INCLUDED IN PC/COT STD DTL 100)

NEW	DESCRIPTION	EXISTING
	New Pavement	
	New Concrete	
	New Riprap	
	Remove Existing Pavement	
36.19	Pavement Spot Elevation	35.40
	Mapped Utility Location	MP(Utility I.D.)
	Blue Stake Utility Location	BS(Utility I.D.)
	Sanitary Sewer Manhole	S
	Gravity Sanitary Sewer	8"S 8"S
	Force Main Sanitary Sewer	FM FM
	Water Main	W-12"-PVC
	Manhole	
	Storm Drain	SD 30"
	Fiber Optic	FO FO
	Electric Line	UGE
	Overhead Electric	OHE
	Utility Pole	UP
	Light Pole	
	Traffic Signal Box	TSB
	Street Light Box	SLB
	Irrigation Control Box	ICB
	Underground Telephone Line	T
	Telephone Pedestal	T
	Natural Gas Line	G
	Gas Line Marker	GLM
	Irrigation Line	IRR
	Irrigation Valve	IV

LENGTH OF PROJECT

Sta 50+00.00 to 76+34.70 = 2,634.70'
Net Length = 0.50 Miles

DESIGN DATA

Grant Road
Roadway Classification = Urban Minor Arterial
Design Speed = 35 MPH
Posted Speed = 35 MPH
Design Vehicle:
Mainline = SU
Frontage Road = P

Pima Street
Current AADT (2013) = 13,777 Veh/Day

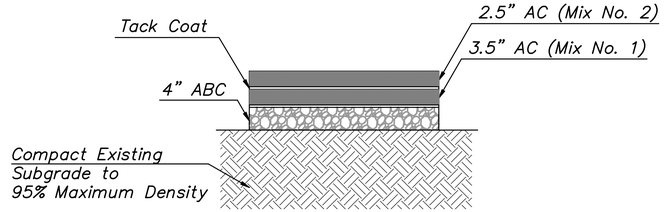

Total Thickness = 10"
STRUCTURAL SECTION NO. 1
Pima Street

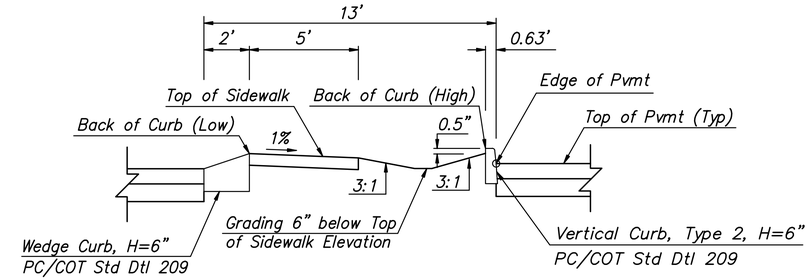

DETAIL
Depressed Median for Landscaping

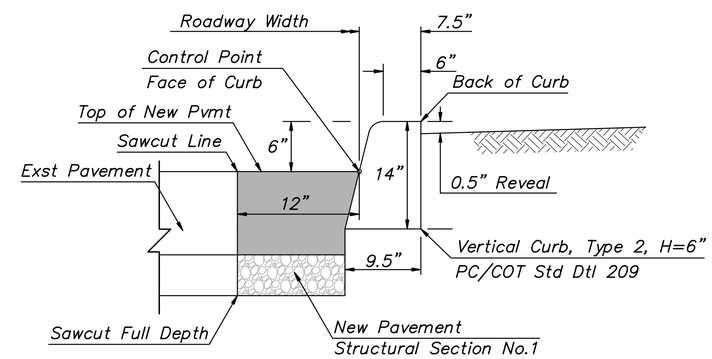

DETAIL
Vertical Curb Control Point

DESIGN SHEET UPC-2014-198

Call at least two full working days before you begin excavation. ARIZONA 811 Arizona Blue Stake, Inc. Dial 8-1-1 or 1-800-STAKE-IT (782-5348) In Maricopa County: (602) 263-1100

PSOMAS
333 E. Wetmore Road, Suite 450
Tucson, AZ 85705
(520) 292-2300 (520) 292-1290 fax
www.psomas.com

NO.	DATE	REVISION	BY	CHKD.	APPR.

90% PRELIMINARY NOT FOR CONSTRUCTION

DEPARTMENT OF TRANSPORTATION/ENGINEERING DIVISION
PIMA STREET
ALVERNON WAY TO COLUMBUS BOULEVARD
Design Sheet

CITY OF TUCSON

DRWN. BY CZ	11/14	REF.	SCALE: N/A
DSGN. BY CZ	11/14		N/A
CHKD. BY AA	04/15	PLAN NO. U-2014-021	

DS01 OF DS01
3 OF 22

T:\7TUS120107\TRANSP\SHEETS\Index\C-PS01DS01.dwg DS01 Chenggang Zhang Thu, 16 Apr 2015, 2:06pm Last Saved By: Chenggang.zhang

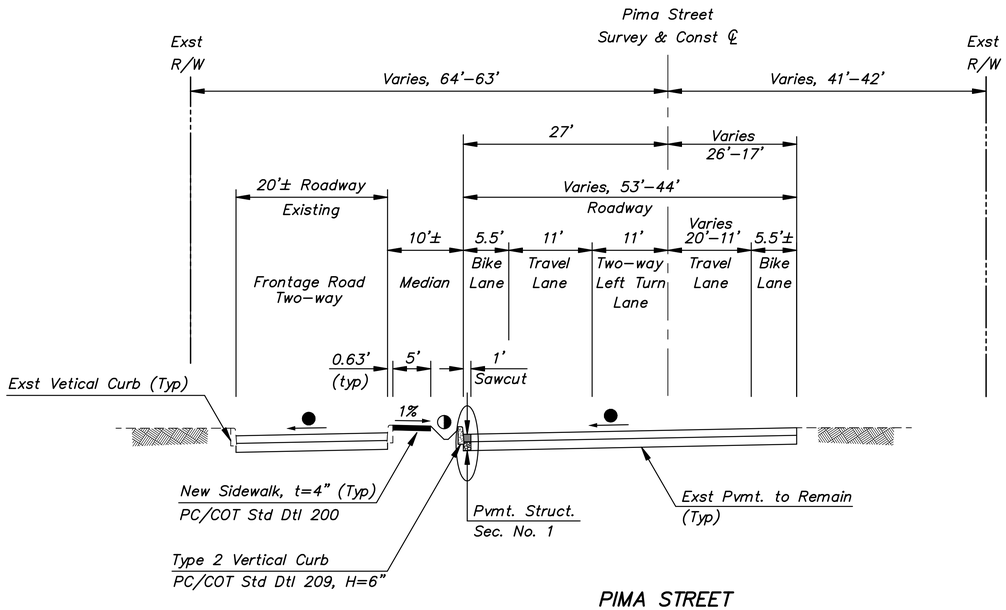

PIMA STREET
Sta 54+80.36 to Sta 59+35.54

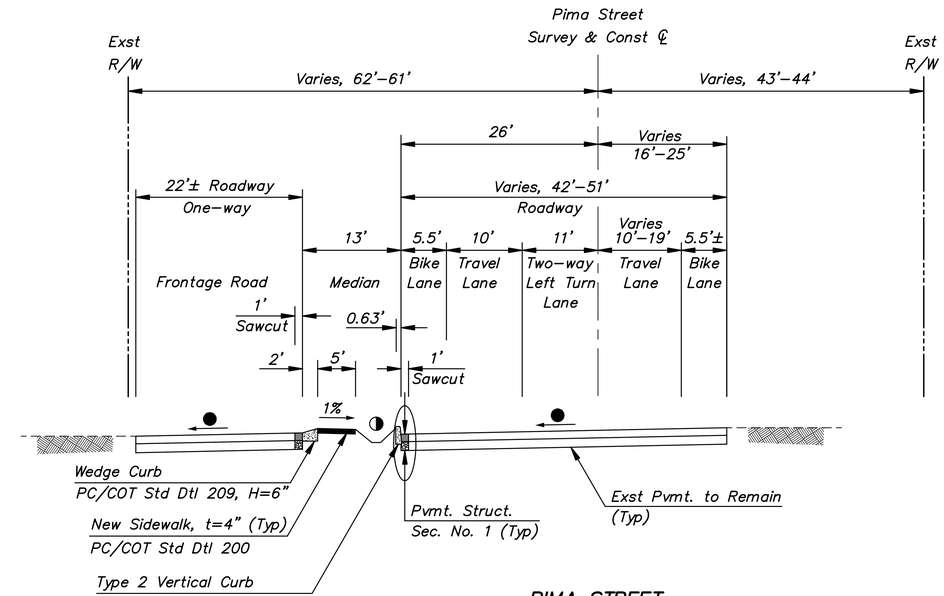

PIMA STREET
Sta 66+49.98 to Sta 73+49.44

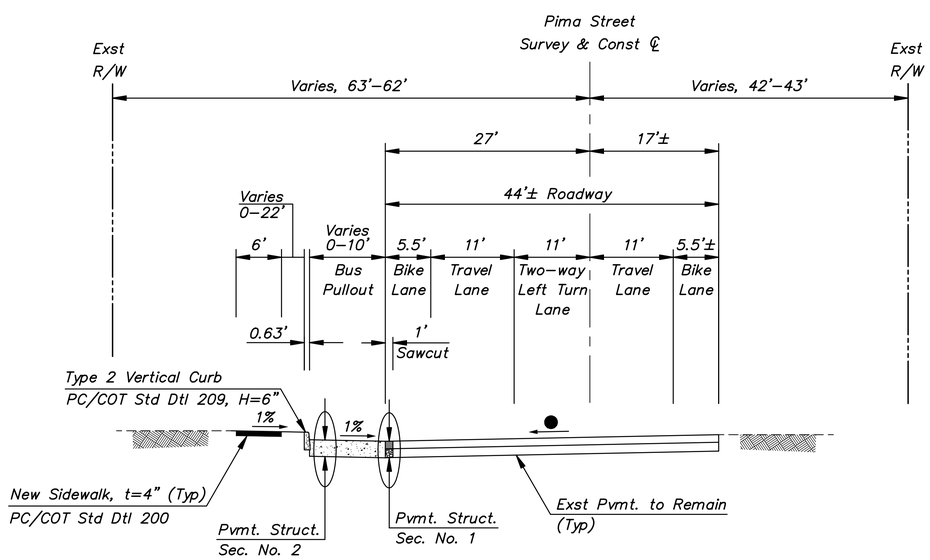

PIMA STREET
Sta 60+20.48 to Sta 65+75.50

◑ Water harvesting basin, see Landscape Plans, depressed median detail on Sheet 3.

● Existing cross slope varies

Note:
1. See roadway plans for right–of–way locations.
2. See roadway plans for sidewalk and median configurations.
3. See roadway plans for intersections and transition areas.
4. New pavement cross slopes shall match existing pavement cross slopes.

TYPICAL SECTIONS

UPC–2014–198

Call at least two full working days before you begin excavation. ARIZONA 811 Arizona Blue Stake, Inc. Dial 8-1-1 or 1-800-STAKE-IT (782-5348) In Maricopa County: (602) 263-1100

PSOMAS
333 E. Wetmore Road, Suite 450
Tucson, AZ 85705
(520) 292–2300 (520) 292–1290 fax
www.psomas.com

NO.	DATE	REVISION	BY	CHKD.	APPR.

90% PRELIMINARY NOT FOR CONSTRUCTION

DEPARTMENT OF TRANSPORTATION/ENGINEERING DIVISION

PIMA STREET
ALVERNON WAY TO COLUMBUS BOULEVARD
Typical Sections

CITY OF TUCSON

DRWN. BY CZ	11/14	REF.	SCALE: N/A
DSGN. BY CZ	11/14		N/A
CHKD. BY AA	04/15	PLAN NO. U–2014–021	

TY01 OF TY01

4 OF 22

T:\7TUS120107\TRANSP\SHEETS\Typicals\C-PS01TY01.dwg TY01 Chenggang Zhang Thu, 16 Apr 2015, 2:06pm Last Saved By: Chenggang.zhang

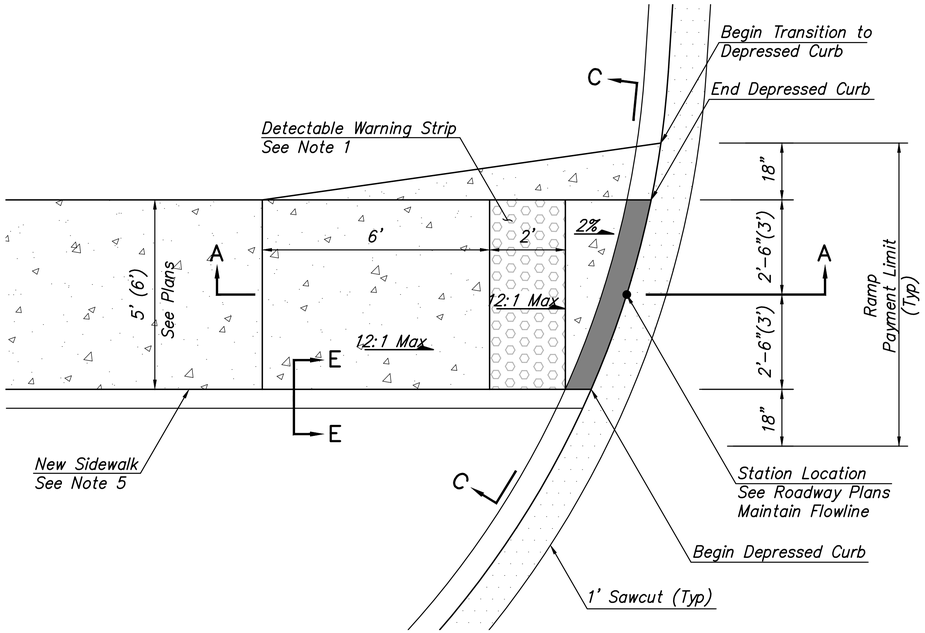

1 PLAN VIEW – WING & RAMP CURB
NTS

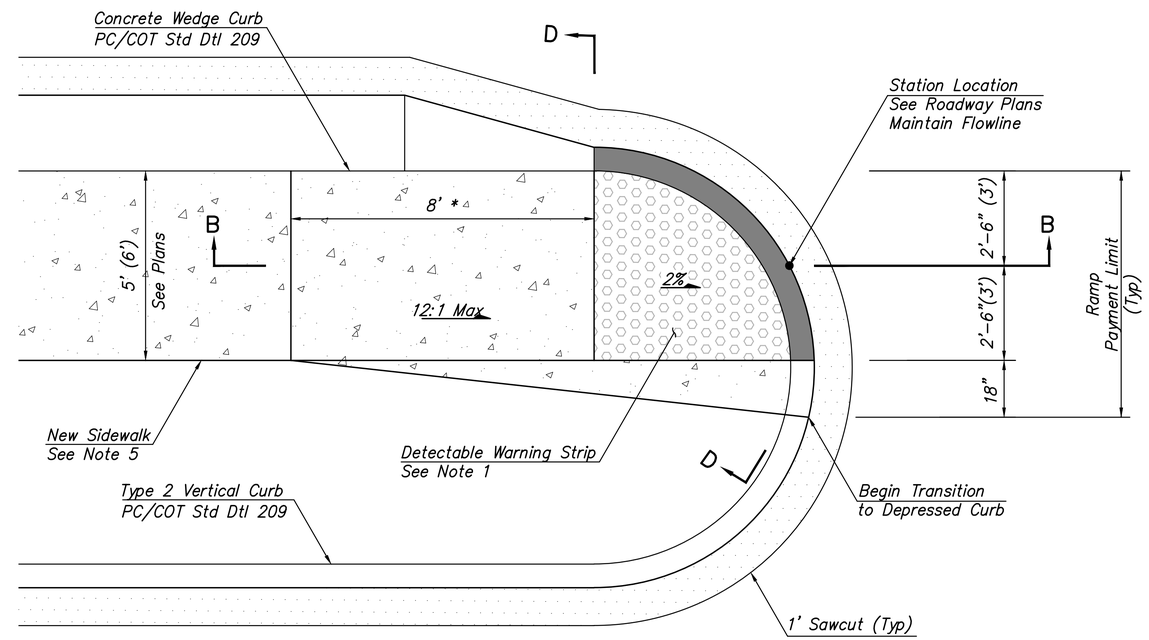

2 PLAN VIEW – WING & WEDGE CURB
NTS

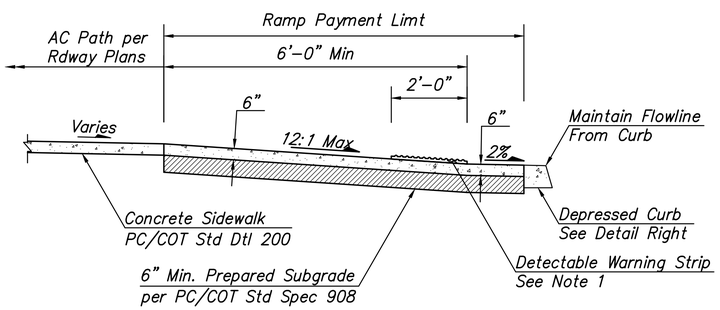

SECTION A
NTS

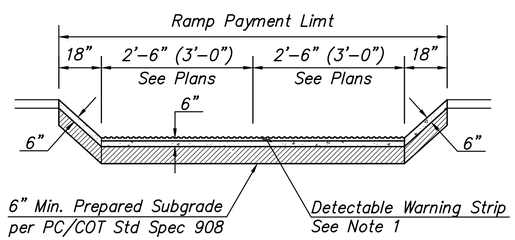

SECTION C
NTS

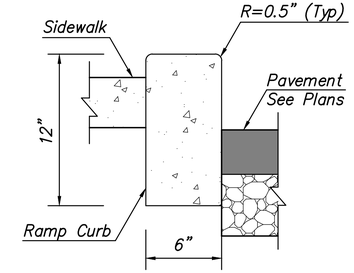

SECTION E
NTS

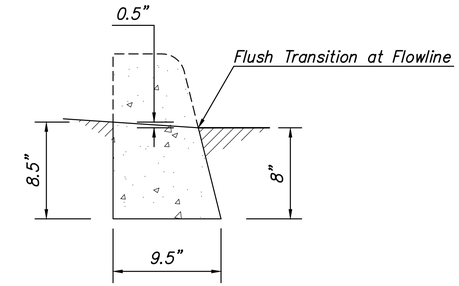

DEPRESSED CURB DETAIL
NTS

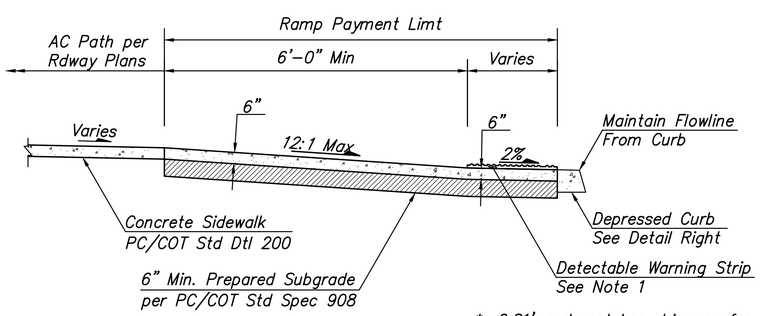

SECTION B
NTS

* 0.81' and matches driveway for the ramp at Sta 74+53.03, 38.13' Lt

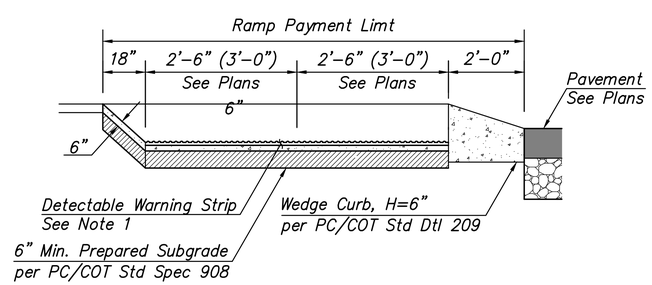

SECTION D
NTS

Note:
1. See COT Std. Dtl. 207 Sheet 4A (revised 04/07) for information regarding detectable warning strip.
2. Concrete shall receive a rough broom finish as shown COT Std. Dtl. 207 (revised 04/07).
3. See PC/COT Std. Dtl. 200 for joint requirements.
4. For design elements not shown in the detail, the contractor shall refer to COT Std. Dtl. 207 (revised 04/07).
5. See Roadway Plans for location and configuration of sidewalk and curb.

DETAIL A
Curb Access Ramp

UPC–2014–198

Call at least two full working days before you begin excavation. ARIZONA 811 Arizona Blue Stake, Inc. Dial 8-1-1 or 1-800-STAKE-IT (782-5348) In Maricopa County: (602) 263-1100

PSOMAS
333 E. Wetmore Road, Suite 450
Tucson, AZ 85705
(520) 292–2300 (520) 292–1290 fax
www.psomas.com

NO.	DATE	REVISION	BY	CHKD.	APPR.

90% PRELIMINARY NOT FOR CONSTRUCTION

DEPARTMENT OF TRANSPORTATION/ENGINEERING DIVISION
PIMA STREET
ALVERNON WAY TO COLUMBUS BOULEVARD
Civil Details

CITY OF TUCSON

DRWN. BY CZ	11/14	REF.	SCALE: 1"=20' N/A
DSGN. BY CZ	11/14		
CHKD. BY AA	04/15	PLAN NO. U–2014–021	

DT01 OF DT01

5 OF 22

T:\7TUS120107\TRANSP\SHEETS\Details\C-PS01DT01.dwg DT01 Chenggang Zhang Thu, 16 Apr 2015, 2:06pm Last Saved By: Chenggang.zhang

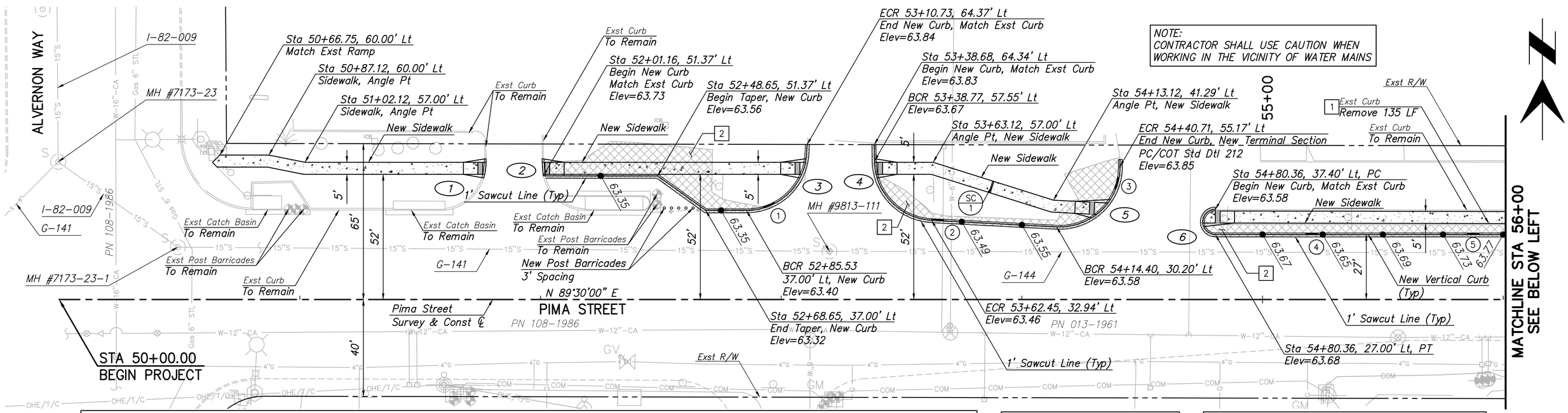

NOTE:
CONTRACTOR SHALL USE CAUTION WHEN WORKING IN THE VICINITY OF WATER MAINS

Note:
1. All elevations are to edge of pavement.
2. Base elevation is 2400 feet.
3. Spot elevations are given at +00, +25, +50, +75 stations unless otherwise noted.
4. See sheet RP03 for curve information.
5. See sheet PM02 for existing sign removal and relocation.
6. All existing pavement, curb, sidewalk, walls, and trees are to remain unless noted otherwise.
7. Contractor shall use extra caution when working in the vicinity of water mains.

HATCH LEGEND

- Exst Pavement Removal
- Exst Concrete Removal

Keynotes

1	Exst Curb – Remove	666 LF
2	Exst Pavement – Remove	1,153 SY

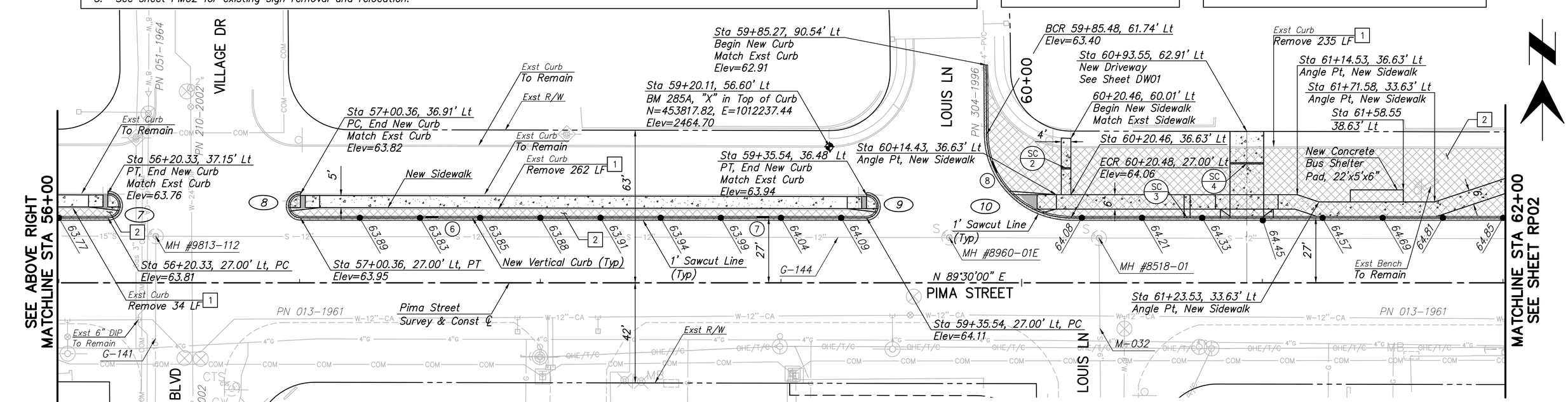

NOTE:
CONTRACTOR SHALL USE CAUTION WHEN WORKING IN THE VICINITY OF WATER MAINS

PAVING SHEET

UPC-2014-198

Call at least two full working days before you begin excavation.
ARIZONA 811
Arizona Blue Stake, Inc.
Dial 8-1-1 or 1-800-STAKE-IT (782-5348)
In Maricopa County: (602) 263-1100

PSOMAS
333 E. Wetmore Road, Suite 450
Tucson, AZ 85705
(520) 292-2300 (520) 292-1290 fax
www.psomas.com

NO.	DATE	REVISION	BY	CHKD.	APPR.

90% PRELIMINARY NOT FOR CONSTRUCTION

DEPARTMENT OF TRANSPORTATION/ENGINEERING DIVISION

PIMA STREET
ALVERNON WAY TO COLUMBUS BOULEVARD
Roadway Plan Sheet

CITY OF TUCSON

DRWN. BY CZ	11/14	REF.	SCALE: 1"=20'	
DSGN. BY CZ	11/14		N/A	
CHKD. BY AA	04/15	PLAN NO. U-2014-021		

RP01 OF RP03

6 OF 22

I:\T\US12017\TRANSP\SHEETS\Paving\C-PS01RP01.dwg RP01 Chenggong Zhong Thu, 16 Apr 2015, 2:08pm Last Saved By: Chenggong.zhong

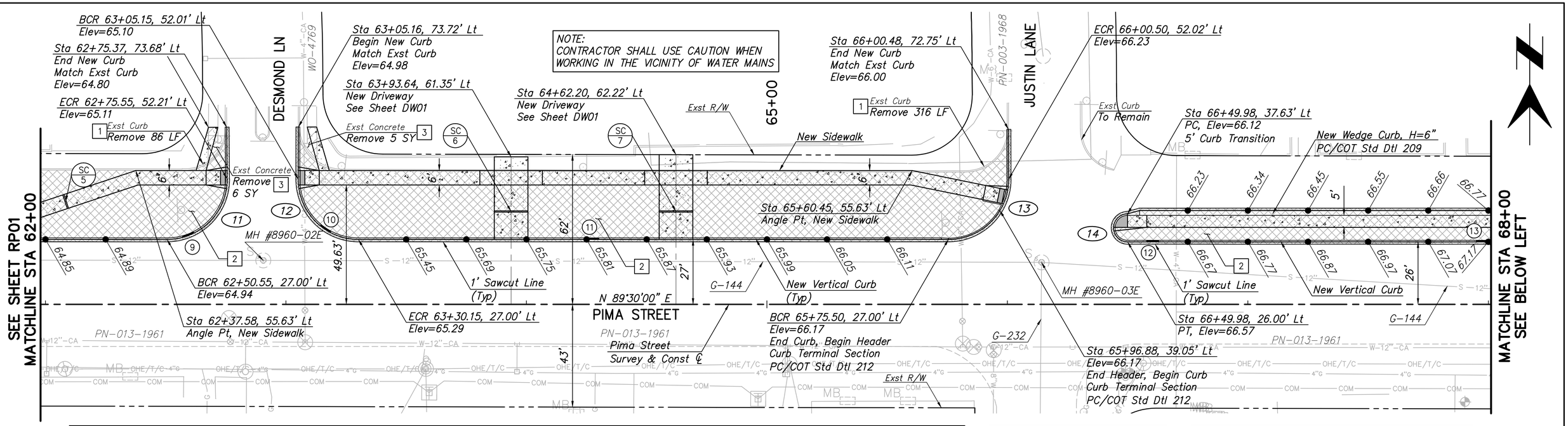

Note:
1. All elevations are to edge of pavement.
2. Base elevation is 2400 feet.
3. Spot elevations are given at +00, +25, +50, +75 stations unless otherwise noted.
4. See sheet RP03 for curve information.
5. See sheet PM02 for existing sign removal and relocation.
6. All existing pavement, curb, sidewalk, walls, and trees are to remain unless noted otherwise.
7. Contractor shall use extra caution when working in the vicinity of water mains.

HATCH LEGEND

- Exst Pavement Removal
- Exst Concrete Removal

Keynotes

1	Exst Curb – Remove	402 LF
2	Exst Pavement – Remove	2,880 SY
3	Exst Concrete – Remove	11 SY

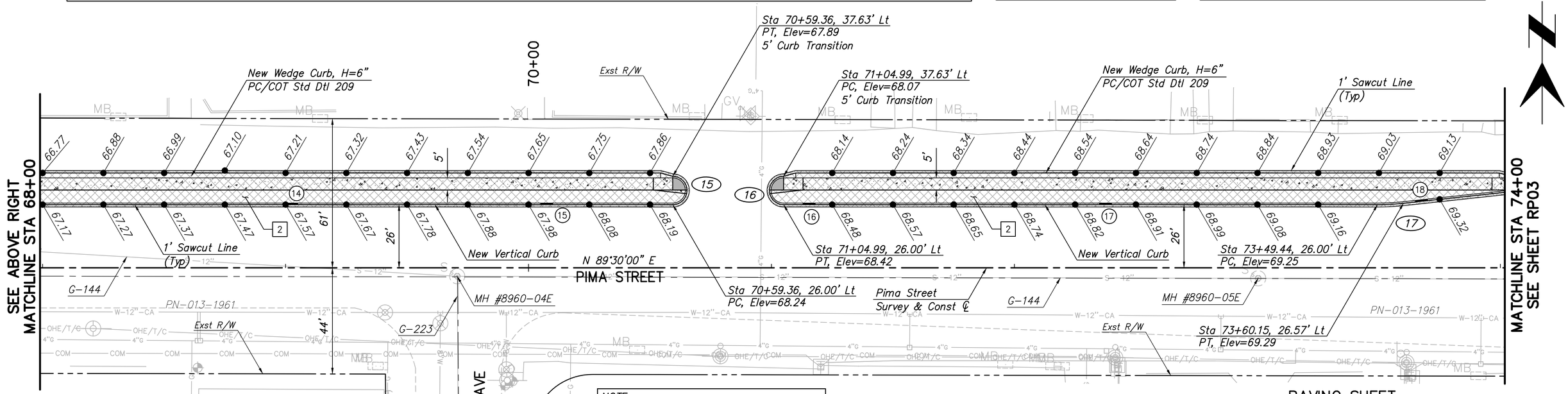

PAVING SHEET

UPC-2014-198

Call at least two full working days before you begin excavation.
ARIZONA 811
Arizona Blue Stake, Inc.
Dial 8-1-1 or 1-800-STAKE-IT (782-5348)
In Maricopa County: (602) 263-1100

PSOMAS
333 E. Wetmore Road, Suite 450
Tucson, AZ 85705
(520) 292-2300 (520) 292-1290 fax
www.psomas.com

NO.	DATE	REVISION	BY	CHKD.	APPR.

90% PRELIMINARY NOT FOR CONSTRUCTION

DEPARTMENT OF TRANSPORTATION/ENGINEERING DIVISION

PIMA STREET
ALVERNON WAY TO COLUMBUS BOULEVARD
Roadway Plan Sheet

CITY OF TUCSON

DRWN. BY CZ	11/14	REF.	SCALE: 1"=20' N/A
DSGN. BY CZ	11/14		
CHKD. BY AA	04/15	PLAN NO. U-2014-021	

RP02 OF RP03

7 OF 22

D:\TUS120107\TRANSP\SHEETS\Paving\C-PS01RP02.dwg RP02 Chengsang Zhang Thu, 16 Apr 2015, 2:08pm Last Saved By: Chengsang.zhang

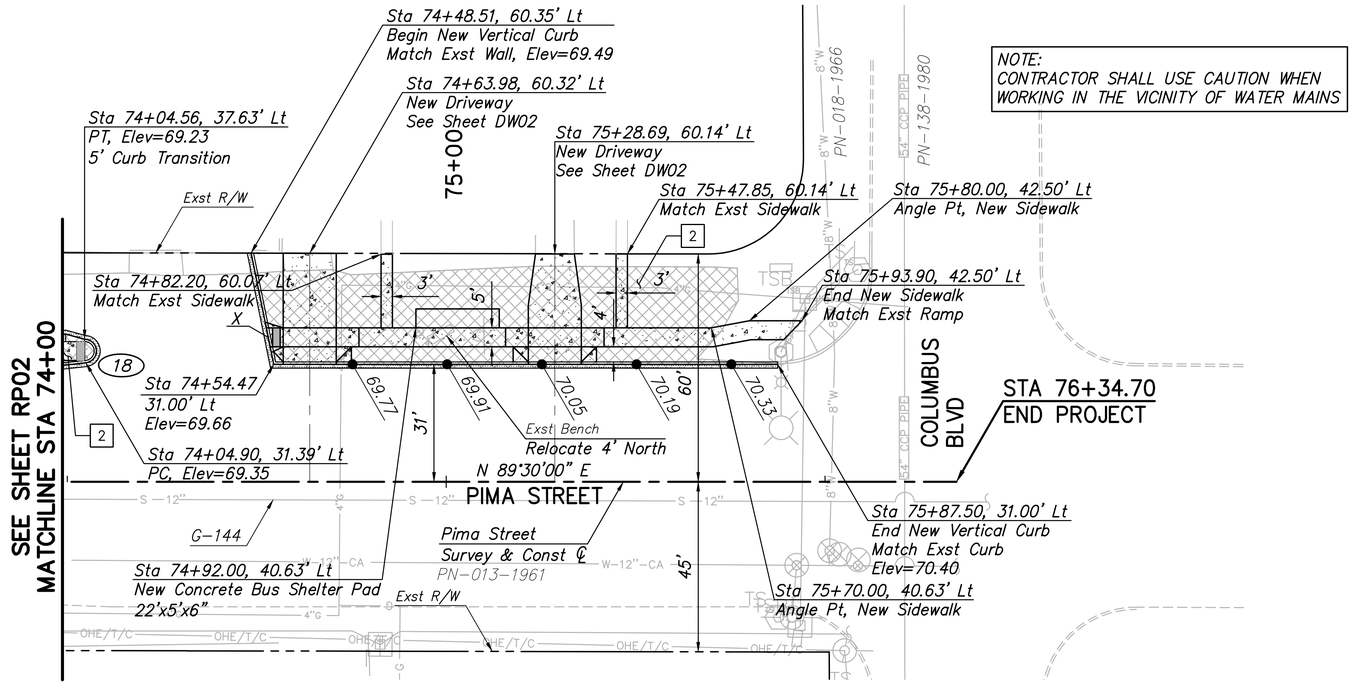

NOTE:
CONTRACTOR SHALL USE CAUTION WHEN WORKING IN THE VICINITY OF WATER MAINS

Note:
1. All elevations are to edge of pavement.
2. Base elevation is 2400 feet.
3. Spot elevations are given at +00, +25, +50, +75 stations unless otherwise noted.
4. See sheet RP03 for curve information.
5. See Signing Plans for existing sign removal.
6. All existing pavement, curb, sidewalk, walls, signal equipment, and trees are to remain unless noted otherwise.
7. Contractor shall use extra caution when working in the vicinity of water mains.

Keynotes

2 Exst Pavement – Remove 367 SY

CURB OPENING DATA

NO.	STATION	OFFSET	REMARK
1	52+95.00	38.86' Lt	See Landscape Plans for Detail
2	53+64.95	32.81' Lt	See Landscape Plans for Detail
3	54+39.76	48.33' Lt	See Landscape Plans for Detail
4	55+20.50	27.00' Lt	See Landscape Plans for Detail
5	55+87.50	27.00' Lt	See Landscape Plans for Detail
6	57+55.00	27.00' Lt	See Landscape Plans for Detail
7	58+92.50	27.00' Lt	See Landscape Plans for Detail
8	59+88.40	48.00' Lt	See Landscape Plans for Detail
9	62+59.51	28.66' Lt	See Landscape Plans for Detail
10	63+16.29	31.20' Lt	See Landscape Plans for Detail
11	64+27.64	27.00' Lt	See Landscape Plans for Detail
12	66+60.48	26.00' Lt	See Landscape Plans for Detail
13	67+97.50	26.00' Lt	See Landscape Plans for Detail
14	69+02.50	26.00' Lt	See Landscape Plans for Detail
15	70+07.50	26.00' Lt	See Landscape Plans for Detail
16	71+15.50	26.00' Lt	See Landscape Plans for Detail
17	72+37.50	26.00' Lt	See Landscape Plans for Detail
18	73+67.61	27.38' Lt	See Landscape Plans for Detail

SCUPPER DATA

NO.	STATION	OFFSET	REMARK
SC 1	53+87.37	46.76' Lt	Type 1 Scupper, PC/COT Std Dtl 204
SC 2	60+18.46	47.59' Lt	Type 1 Scupper, PC/COT Std Dtl 204
SC 3	60+68.75	27.00' Lt	Type 2 Scupper, PC/COT Std Dtl 205
SC 4	60+93.55	49.66' Lt	Type 1 Scupper, PC/COT Std Dtl 204
SC 5	62+08.42	42.74' Lt	Type 1 Scupper, PC/COT Std Dtl 204
SC 6	63+93.64	38.62' Lt	Type 1 Scupper, PC/COT Std Dtl 204
SC 7	64+62.20	38.62' Lt	Type 1 Scupper, PC/COT Std Dtl 204

CURB CURVE DATA

CURVE NO.	RADIUS	LENGTH	DELTA	TANGENT
C1*	–	–	–	–
C2*	–	–	–	–
C3	25.00'	37.66'	86°19'14"	23.44'
C4	25.00'	37.60'	86°10'08"	23.38'
C5	25.00'	40.59'	93°01'07"	26.35'
C6	5.20'	16.34'	180°00'00"	N/A
C7	5.07'	15.94'	180°00'00"	N/A
C8	4.96'	15.57'	180°00'00"	N/A
C9	4.74'	14.90'	180°00'00"	N/A
C10	35.00'	54.72'	89°34'36"	34.74'
C11	25.00'	39.48'	90°28'33"	25.21'
C12	25.00'	39.28'	90°01'53"	25.01'
C13	25.00'	39.29'	90°02'40"	25.02'
C14	5.81'	18.26'	180°00'00"	N/A
C15	5.81'	18.26'	180°00'00"	N/A
C16	5.81'	18.26'	180°00'00"	N/A
C17	100.00'	10.73'	6°08'45"	5.37'
C18	3.13'	9.48'	173°51'15"	58.21'

* Existing curb curve, Sawcut to match new ramps.
** Ramp approach is shorter (0.81') but flat due to adjacent driveway.

ACCESS RAMP DATA

CURVE NO.	STATION	OFFSET	TYPE
C1*	51+77.12	54.50' Lt	COT Std. Dtl. 207, 4A of 5
C2*	52+00.82	54.50' Lt	Detail A, Type 1
C3	53+09.38	54.50' Lt	COT Std. Dtl. 207, 4A of 5
C4	53+39.00	54.50' Lt	COT Std. Dtl. 207, 4A of 5
C5	54+33.60	37.70' Lt	COT Std. Dtl. 207, 4A of 5
C6	54+75.60	34.28' Lt	Detail A, Type 1
C7	56+25.02	34.01' Lt	Detail A, Type 1
C8	56+95.76	33.80' Lt	Detail A, Type 1
C9	59+40.01	33.35' Lt	Detail A, Type 1
C10	59+99.99	33.63' Lt	COT Std. Dtl. 207, 4A of 5
C11	62+75.55	52.63' Lt	COT Std. Dtl. 207, 4A of 5
C12	63+05.15	52.63' Lt	COT Std. Dtl. 207, 4A of 5
C13	65+99.39	44.66' Lt	Detail A, Type 1
C14	66+44.82	34.50' Lt	Detail A, Type 2
C15	70+64.51	34.50' Lt	Detail A, Type 2
C16	70+99.83	34.50' Lt	Detail A, Type 2
C18	74+07.69	34.50' Lt	Detail A, Type 2
X**	74+53.03	38.13' Lt	COT Std. Dtl. 207, 4B of 5

Call at least two full working days before you begin excavation.
ARIZONA 811
Arizona Blue Stake, Inc.
Dial 8-1-1 or 1-800-STAKE-IT (782-5348)
In Maricopa County: (602) 263-1100

PSOMAS
333 E. Wetmore Road, Suite 450
Tucson, AZ 85705
(520) 292-2300 (520) 292-1290 fax
www.psomas.com

NO.	DATE	REVISION	BY	CHKD.	APPR.

90% PRELIMINARY NOT FOR CONSTRUCTION

PAVING SHEET

UPC-2014-198

DEPARTMENT OF TRANSPORTATION/ENGINEERING DIVISION

PIMA STREET
ALVERNON WAY TO COLUMBUS BOULEVARD
Roadway Plan Sheet

CITY OF TUCSON

DRWN. BY CZ	11/14	REF. ____ SCALE: 1"=20'
DSGN. BY CZ	11/14	N/A
CHKD. BY AA	04/15	PLAN NO. U-2014-021

RP03 OF RP03

8 OF 22

I:\T10S12E10T\TRANSP\SHEETS\Paving\C-PS01RP03.dwg RP03 Chengpeng Zhang Thu, 16 Apr 2015, 2:06pm Last Saved By: Chengpeng.Zhang

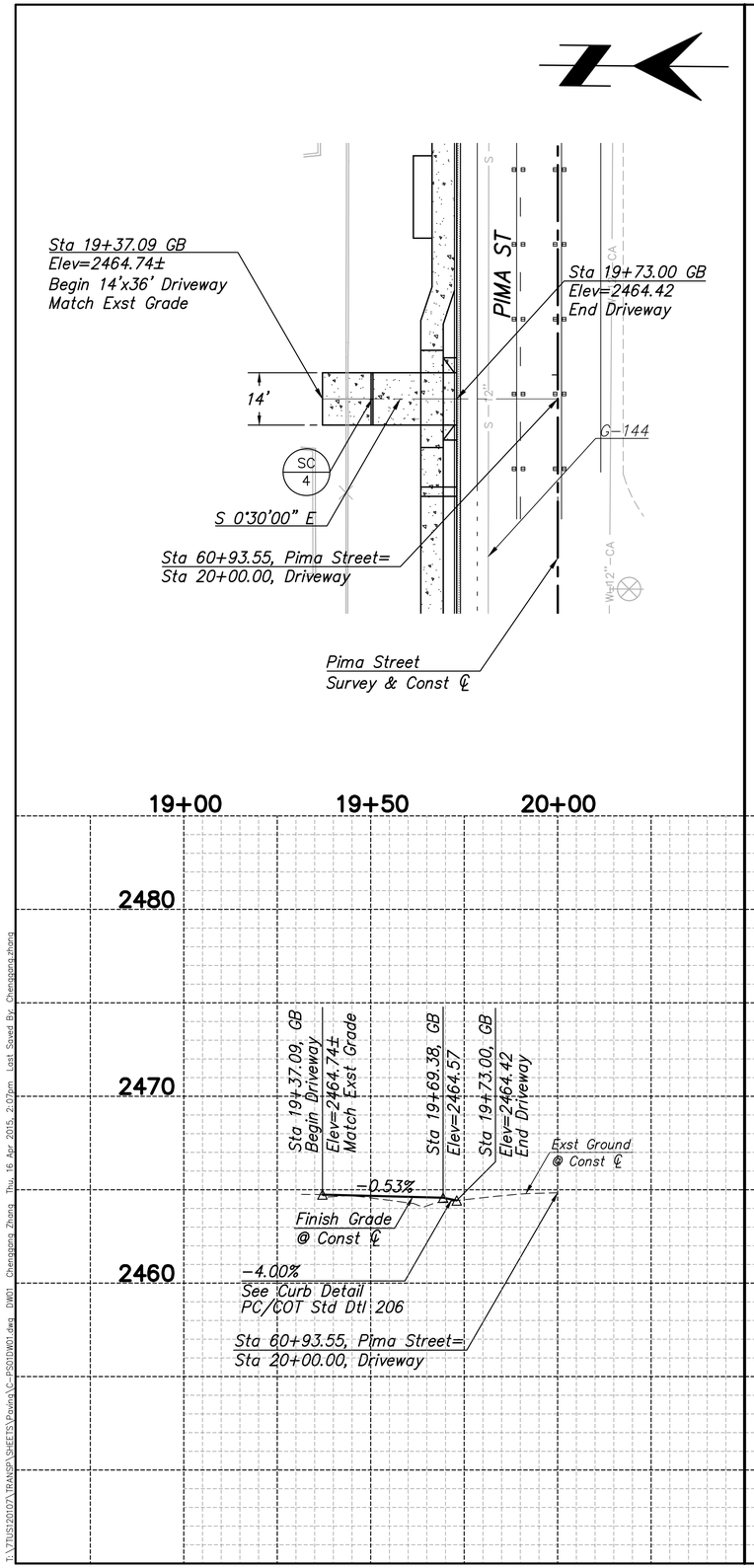

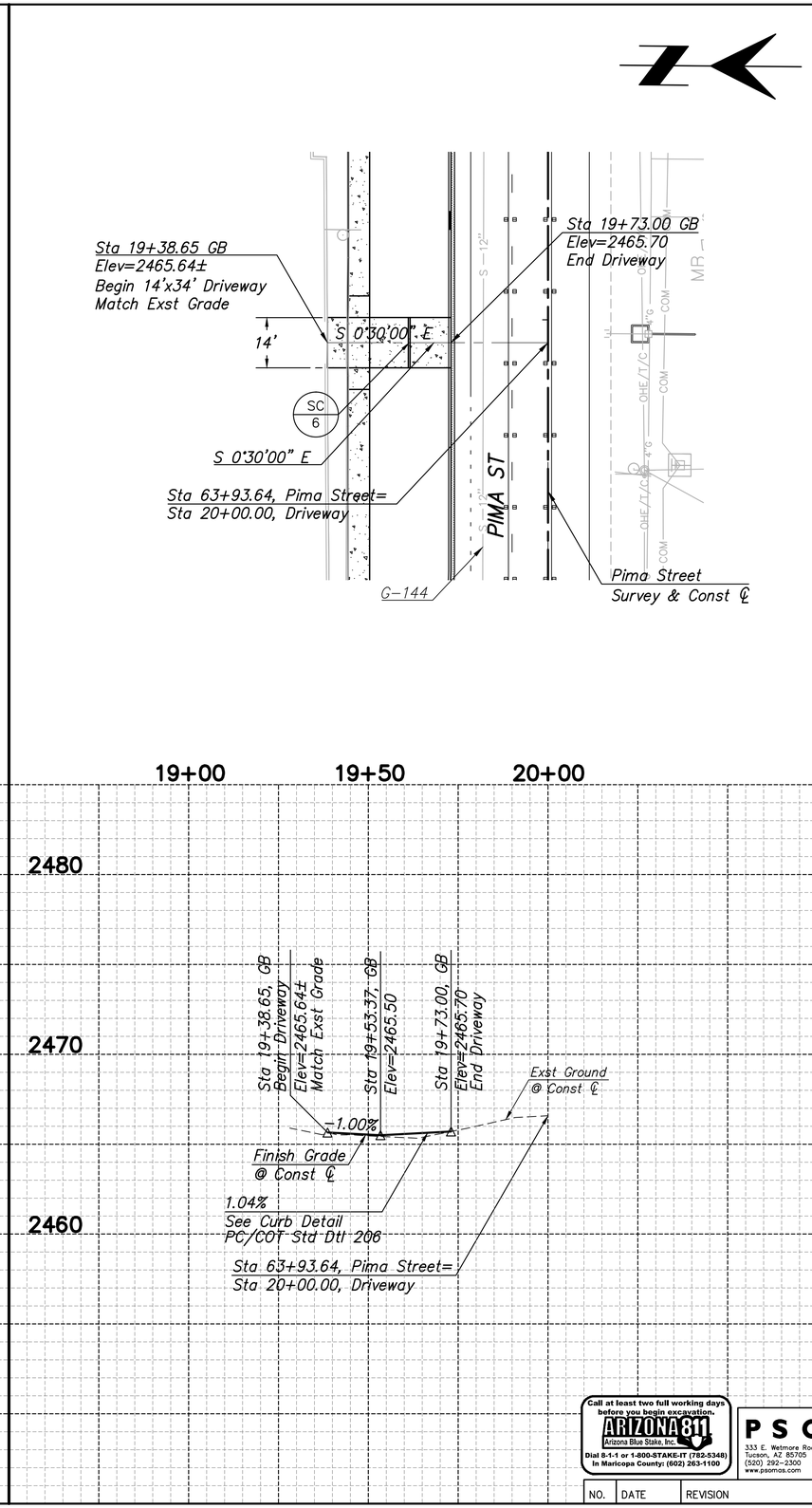

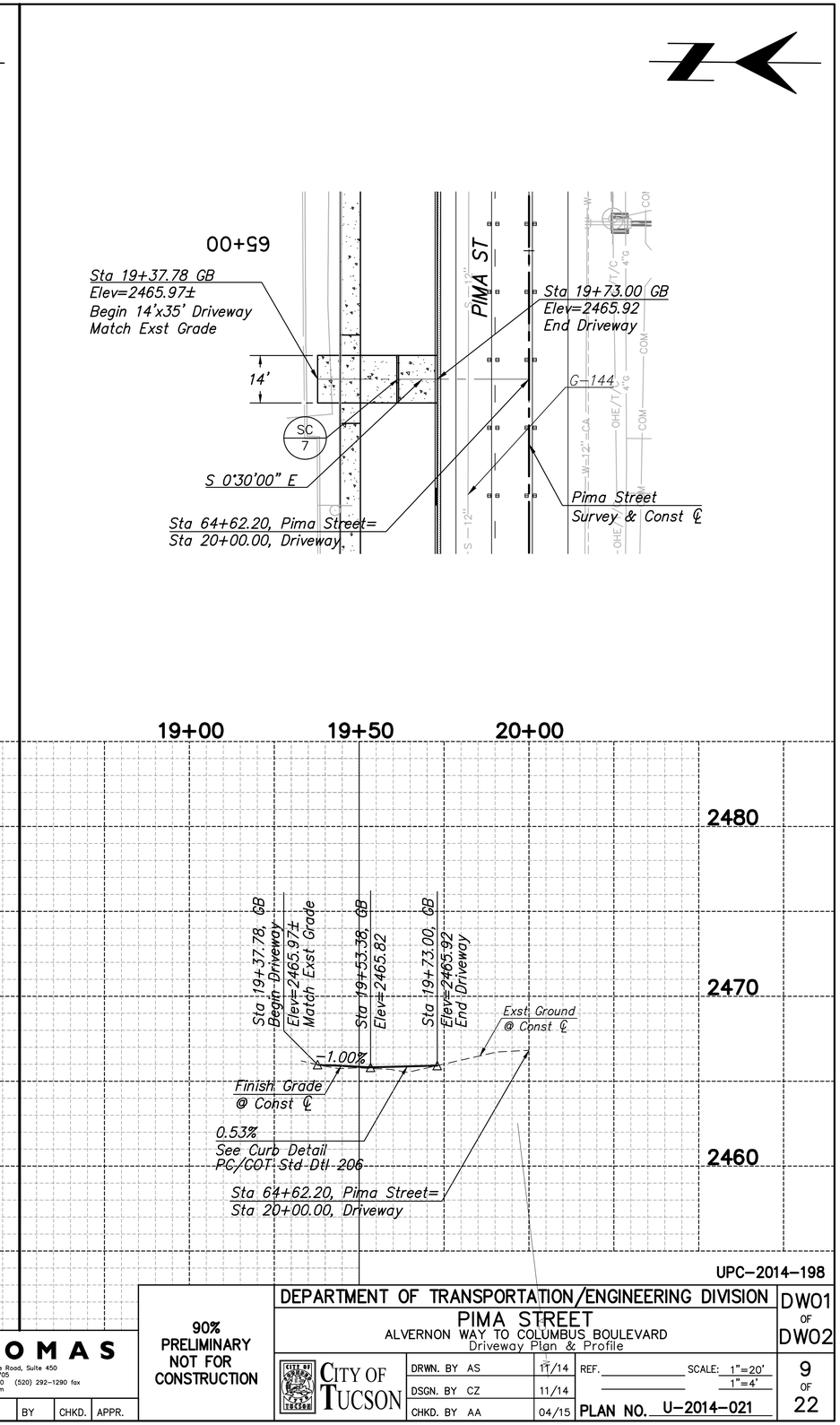

UPC-2014-198

Call at least two full working days before you begin excavation.
ARIZONA 811
Arizona Blue Stake, Inc.
Dial 8-1-1 or 1-800-STAKE-IT (782-5348)
In Maricopa County: (602) 263-1100

PSOMAS
333 E. Welmore Road, Suite 450
Tucson, AZ 85705
(520) 292-2300 (520) 292-1290 fax
www.psomas.com

NO.	DATE	REVISION	BY	CHKD.	APPR.

90% PRELIMINARY NOT FOR CONSTRUCTION

DEPARTMENT OF TRANSPORTATION/ENGINEERING DIVISION

PIMA STREET
ALVERNON WAY TO COLUMBUS BOULEVARD
Driveway Plan & Profile

CITY OF TUCSON

DRWN. BY AS	11/14	REF. ____ SCALE: 1"=20' / 1"=4'
DSGN. BY CZ	11/14	
CHKD. BY AA	04/15	PLAN NO. U-2014-021

DW01 OF DW02

9 OF 22

I:\TTUS120107\TRANSP\SHEETS\Paving\C-PS01DW01.dwg DW01 Chengsong Zhang Thu, 16 Apr 2015, 2:07pm Last Saved By: Chengsong.Zhang

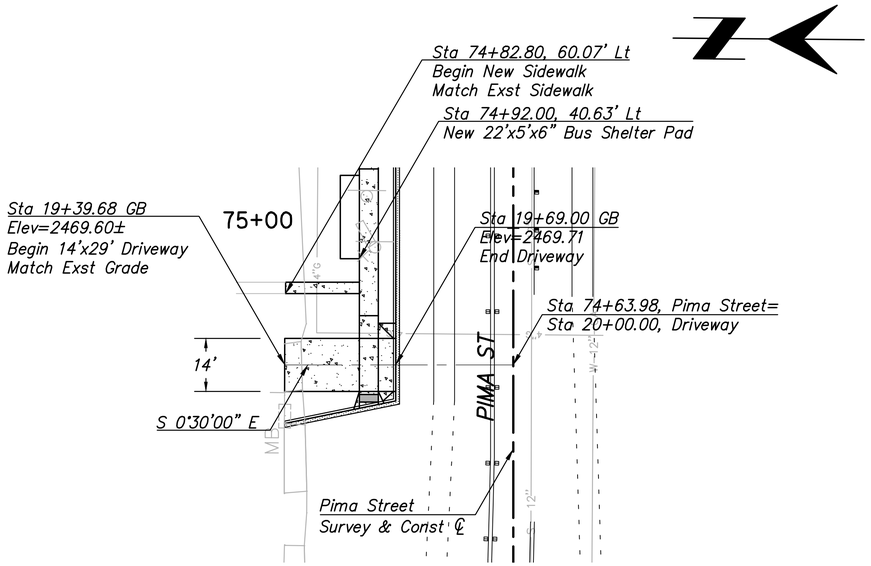

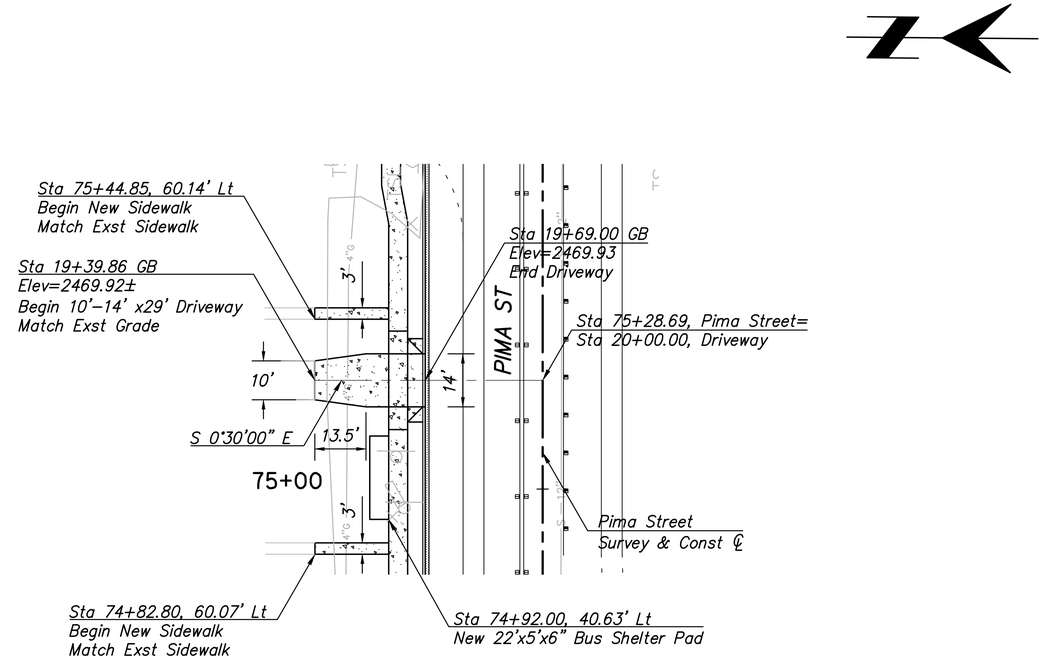

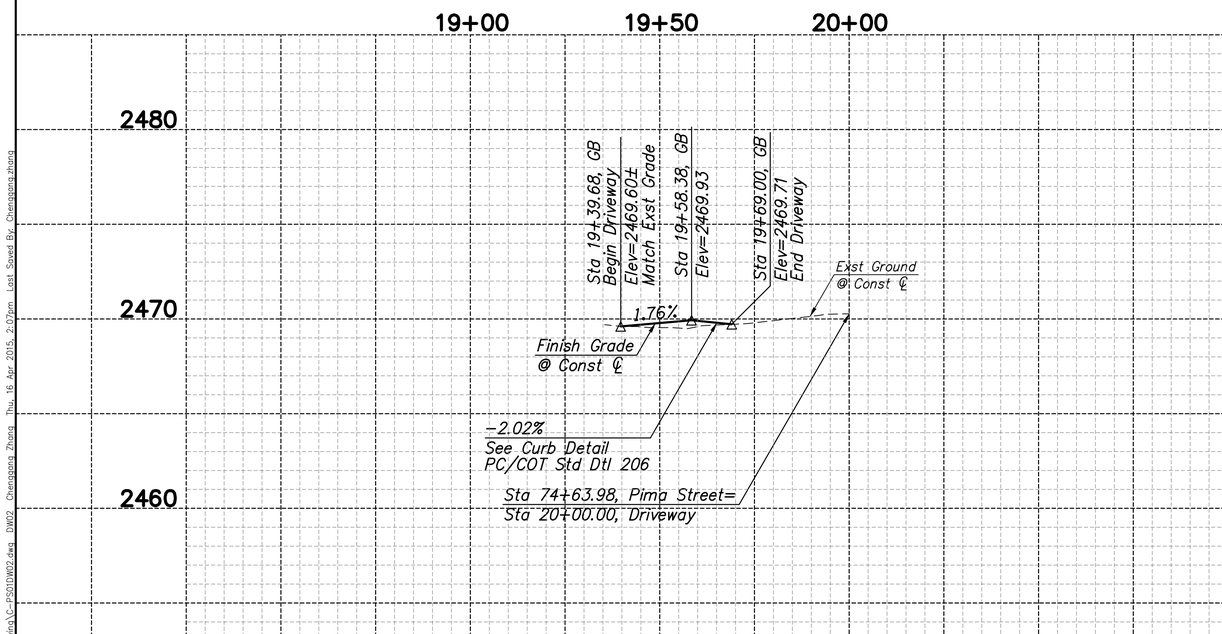

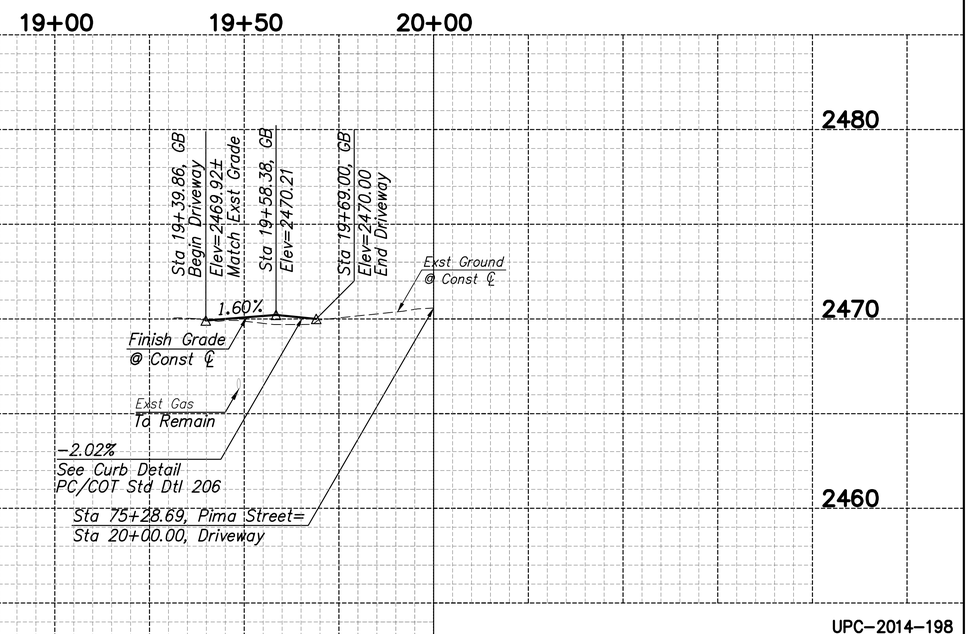

UPC-2014-198

Call at least two full working days before you begin excavation.
ARIZONA 811
Arizona Blue Stake, Inc.
Dial 8-1-1 or 1-800-STAKE-IT (782-5348)
In Maricopa County: (602) 263-1100

PSOMAS
333 E. Wetmore Road, Suite 450
Tucson, AZ 85705
(520) 292-2300 (520) 292-1290 fax
www.psomas.com

NO.	DATE	REVISION	BY	CHKD.	APPR.

90% PRELIMINARY NOT FOR CONSTRUCTION

DEPARTMENT OF TRANSPORTATION/ENGINEERING DIVISION

PIMA STREET
ALVERNON WAY TO COLUMBUS BOULEVARD
Driveway Plan & Profile

CITY OF TUCSON

DRWN. BY AS	11/14	REF.	SCALE: 1"=20' / 1"=4'
DSGN. BY CZ	11/14		
CHKD. BY AA	04/15	PLAN NO. U-2014-021	

DW02 OF DW02

10 OF 22

D:\TTUS120107\TRANSP\SHEETS\Paving\C-PS01DW02.dwg DW02 Chengpeng Zhang Thu, 16 Apr 2015, 2:07pm Last Saved By: Chengpeng Zhang

STRIPING GENERAL NOTES

1. All pavement markings shall conform to Pima County/City of Tucson Standards and Specifications.
2. The permanent pavement markings may be modified as directed by the Engineer.
3. The design vehicle for Pima Street is Single Unit Truck. The design speed for Pima Street is 35 mph, and the posted speed for Pima Street is 35 mph.
4. All lane dimensions are from center of lane line, center of double lane line, face of curb, or edge of pavement unless otherwise noted.
5. The pavement marking drawings are schematic only. The Contractor shall follow all dimensions, details and standards when installing pavement striping, markings and markers.
6. The final longitudinal striping shall be 90 mil (0.090") thick extruded/sprayed thermoplastic reflectorized striping placed over the temporary striping within 14 to 30 calendar days after completion of the final pavement surface, or as directed by the Engineer. All other markings shall be applied at the same time. Temporary striping shall be paint.
7. All final transverse markings shall be hot sprayed/preformed 90 mil thermoplastic striping (0.090"). All pavement arrows and legends shall be Type 1 pre-formed thermoplastic pavement markings.
8. The Contractor shall be responsible for the layout and installation of pavement markings.
9. It is the Contractor's responsibility to ensure that the final surface course is placed so that the striping is offset no more than one foot clear of the construction joint, unless otherwise directed by the Engineer.
10. The Contractor shall clean the roadway surface to the satisfaction of the Engineer by sweeping and air-jet blowing immediately prior to the placement of all pavement markings. The temperature shall not be less than 50 degrees F. for the placement of thermoplastic striping, and 40 degrees F. for the placement of raised pavement markers (RPMs).
11. All raised pavement markers shall be installed so that the reflective face of each marker is facing the direction of traffic and is perpendicular to the direction of traffic flow. Type C pavement markers shall be installed so that the clear reflective face of each marker is facing opposing traffic and perpendicular to the direction of traffic flow.
12. At intersection approaches on roadways with medians, Type C RPMs shall be placed as per PCDOT/COTDOT Standards or as directed by the Engineer.
13. The existing pavement markings that conflict with the new pavement markings shall be obliterated. All removal of existing pavement markings shall be accomplished in accordance with Section 701 of the PC/COT Standard Specifications. Asphalt slurry seal, 3 feet in width, shall be placed on top of the obliterated pavement marking parallel to the direction of travel. The cost of slurry seal shall be considered as incidental to obliteration. Painting over existing striping does not constitute approved striping obliteration.
14. The Engineer of record shall be required to produce as-built striping plans within 90 days of striping completion.
15. Final inspection/acceptance of Pavement Markings shall be performed by the Traffic Engineer.
16. Type H raised pavement markers shall be placed on median ends as shown on Detail right.

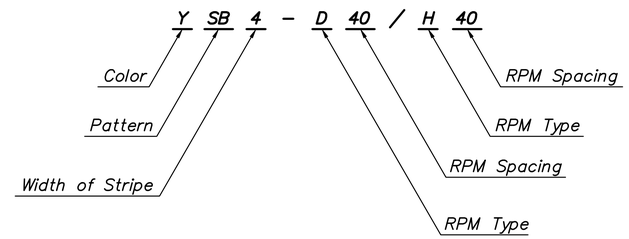

LINE STYLE DESIGNATION

See PCDOT and COT DOT Pavement Marking Standards for Further Descriptions.

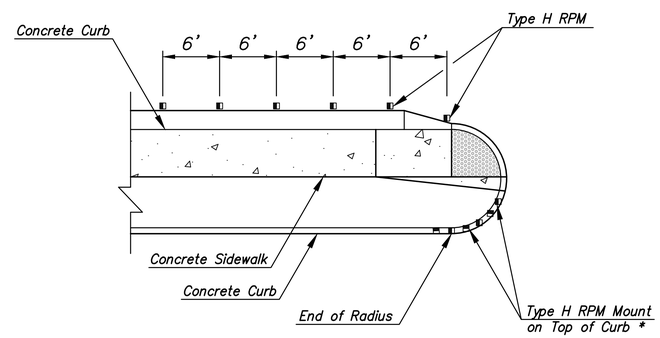

** A minimum 6 RPMs shall be installed at equal spacing. Maximum spacing is 2'. Half of the RPMs mounted on the median nose end shall be aimed at on-coming traffic, and half shall be aimed at the cross-street approach left-turn movement in an alternating pattern, as shown.*

TYPICAL MEDIAN END TREATMENT

SIGNING GENERAL NOTES

1. All signs shall be in compliance with the 2009 Edition of the Manual on Uniform Traffic Control Devices, 2002 Edition of the Pima County and City of Tucson Traffic Signing Design Manual, the Supplemental Specifications, these Plans, and the Special Provisions.
2. Signs may be modified and locations adjusted to fit conditions as directed by the jurisdiction Traffic Engineer or Designee.
3. Post lengths indicated on sign summary sheets are approximate. The contractor shall verify actual post lengths.
4. All new and existing signs shall be installed on perforated post (Square Tube), and shall be installed in a concrete foundation, unless otherwise directed by the jurisdiction Traffic Engineer or Designee.
5. (a). All sign station locations are approximate. The contractor shall verify actual sign locations with the jurisdiction Traffic Engineer or Designee prior to the installation of all signs. (b). The contractor shall be responsible for coordinating all work with Blue Stake and for installing all traffic signs in the field.
6. All warning sign panels shall be fluorescent yellow ASTM Type XI sheeting. All school zone signs shall be fluorescent yellow-green ASTM Type XI sheeting. All other sign panels shall have high intensity Prismatic Type IV sheeting.
7. All new signs shall have aluminum backing, unless otherwise specified.
8. All existing signs to be removed as part of this project are to be delivered to the City of Tucson Sign Shop at 4004 S. Park Ave. (791-3154). The contractor is responsible for unloading the salvaged material. Any salvaged sign that is to be reused shall be temporarily stored in a safe location until reinstallation.
9. Removal shall be in accordance with section 202-3.06 of the 2003 PC/COT standard specifications for public improvements.
10. Final inspection/acceptance of signing shall be performed by the jurisdiction Traffic Engineer or Designee.
11. The design speed for Pima Street is 35 mph, and the posted speed limit for Pima Street is 35 mph. Sign placement shall be based on the posted speed limit.
12. All existing traffic signs on Pima Street within the project limits should remain unless specifically called out to remove or relocate on the signing plan sheet.
17. Shop drawings of sign submittals shall be submitted to Traffic Engineering (Diahn Swartz, 520-791-4259) for approval before fabrication.

PAVEMENT MARKING QUANTITIES

ITEM		UNIT	QUANT
PERMANENT THERMOPLASTIC PAVEMENT MARKINGS	4" WHITE (0.090")	LIN FT	4,500
	4" YELLOW (0.090")	LIN FT	4,100
RAISED PAVEMENT MARKERS	TYPE D	EA	170

SIGNING QUANTITIES

ITEM		UNIT	QUANT
SIGN PANEL SHEETING TYPE	TYPE IV	SQ FT	123
SIGN POSTS	P-1 PERFORATED SIGN POSTS	LIN FT	208
	P-1 FOUNDATION	EACH	17

SIGNING AND PAVEMENT MARKING NOTES UPC-2014-198

Call at least two full working days before you begin excavation. ARIZONA 811 Arizona Blue Stake, Inc. Dial 8-1-1 or 1-800-STAKE-IT (782-5348) In Maricopa County: (602) 263-1100

PSOMAS
333 E. Wetmore Road, Suite 450
Tucson, AZ 85705
(520) 292-2300 (520) 292-1290 fax
www.psomas.com

NO.	DATE	REVISION	BY	CHKD.	APPR.

90% PRELIMINARY NOT FOR CONSTRUCTION

DEPARTMENT OF TRANSPORTATION/ENGINEERING DIVISION
PIMA STREET
ALVERNON WAY TO COLUMBUS BOULEVARD
Singing & Pavement Marking Notes

CITY OF TUCSON

DRWN. BY CZ	11/14	REF.	SCALE: N/A
DSGN. BY CZ	11/14		N/A
CHKD. BY AA	04/15	PLAN NO. U-2014-021	

PM01 OF PM03

11 OF 22

I:\V70USV2010\TRANSP\SHEETS\Signing & Striping\C-PS01PM01.dwg PM01 Chengpeng Zhang Thu, 16 Apr 2015, 2:09pm Last Saved By: Chengpeng.zhang

Notes:
1. All existing signs are to remain unless noted otherwise
2. Existing striping that conflicts with new striping shall be obliterated by a method approved by the Engineer. When existing striping overlaps with new striping, the exist striping shall be refreshed with new striping.

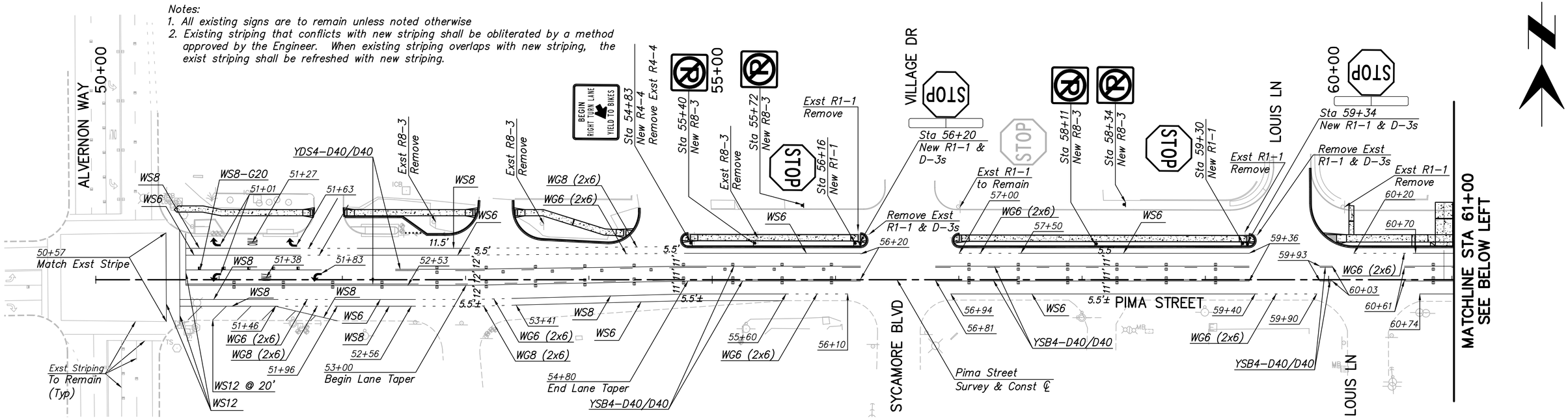

Notes:
1. All existing signs are to remain unless noted otherwise
2. Existing striping that conflicts with new striping shall be obliterated by a method approved by the Engineer. When existing striping overlaps with new striping, the exist striping shall be refreshed with new striping.

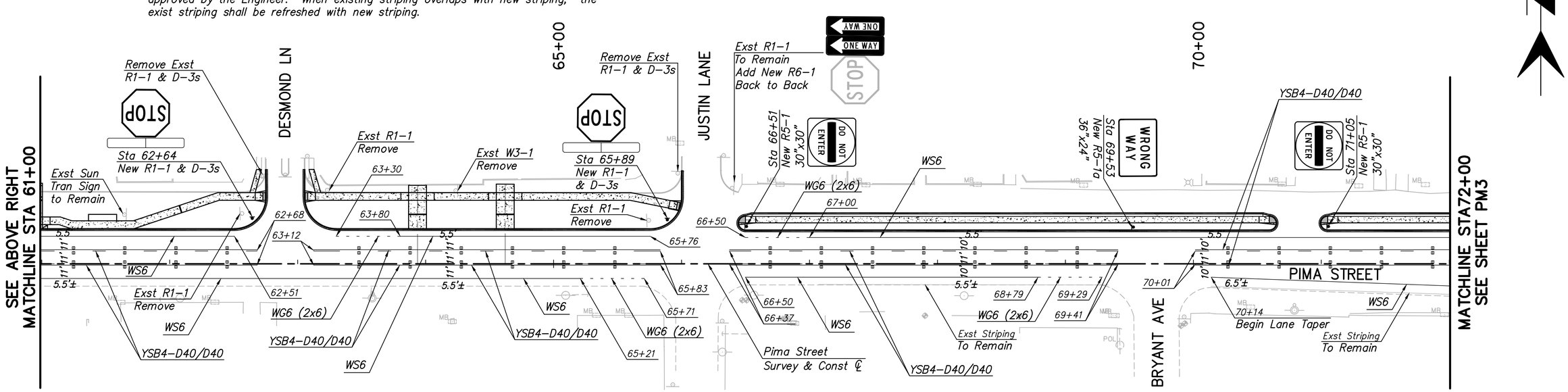

SIGNING AND PAVEMENT MARKING SHEET UPC-2014-198

Call at least two full working days before you begin excavation.
ARIZONA 811
Arizona Blue Stake, Inc.
Dial 8-1-1 or 1-800-STAKE-IT (782-5348)
In Maricopa County: (602) 263-1100

PSOMAS
333 E. Wetmore Road, Suite 450
Tucson, AZ 85705
(520) 292-2300 (520) 292-1290 fax
www.psomas.com

NO.	DATE	REVISION	BY	CHKD.	APPR.

90% PRELIMINARY NOT FOR CONSTRUCTION

DEPARTMENT OF TRANSPORTATION/ENGINEERING DIVISION

PIMA STREET
ALVERNON WAY TO COLUMBUS BOULEVARD
Singing & Pavement Marking Sheet

CITY OF TUCSON

DRWN. BY CZ	11/14	REF. ____ SCALE: 1"=40'
DSGN. BY CZ	11/14	N/A
CHKD. BY AA	04/15	PLAN NO. U-2014-021

PM02 OF PM03

12 OF 22

P:\TIUS120107\TRANSP\SHEETS\Signing & Striping\C-PS01PM02.dwg PM02 Chengqiang Zhang Thu, 16 Apr 2015, 2:09pm Last Saved By: Chengqiang zhang

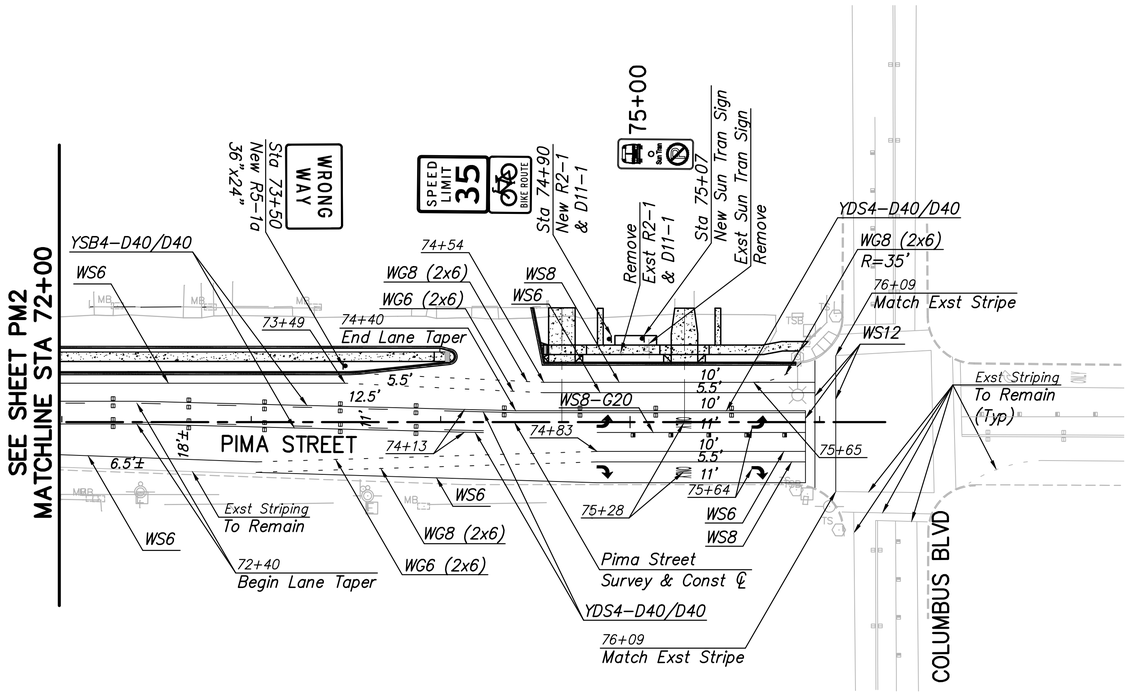

Notes:
1. All existing signs are to remain unless noted otherwise
2. Existing striping that conflicts with new striping shall be obliterated by a method approved by the Engineer. When existing striping overlaps with new striping, the exist striping shall be refreshed with new striping.

SIGNING AND PAVEMENT MARKING SHEET UPC–2014–198

Call at least two full working days before you begin excavation.
ARIZONA 811
Arizona Blue Stake, Inc.
Dial 8-1-1 or 1-800-STAKE-IT (782-5348)
In Maricopa County: (602) 263-1100

PSOMAS
333 E. Wetmore Road, Suite 450
Tucson, AZ 85705
(520) 292–2300 (520) 292–1290 fax
www.psomas.com

NO.	DATE	REVISION	BY	CHKD.	APPR.

90% PRELIMINARY NOT FOR CONSTRUCTION

DEPARTMENT OF TRANSPORTATION/ENGINEERING DIVISION

PIMA STREET
ALVERNON WAY TO COLUMBUS BOULEVARD
Singing & Pavement Marking Sheet

CITY OF TUCSON

DRWN. BY CZ	11/14	REF.	SCALE: 1"=40'
DSGN. BY CZ	11/14		N/A
CHKD. BY AA	04/15	PLAN NO. U–2014–021	

PM03 OF PM03

13 OF 22

T:\TUS\20107\TRANSP\SHEETS\Signing & Striping\C-PS01PM03.dwg PM02 Chengqong Zhong Thu, 16 Apr 2015, 2:08pm Last Saved By: Chengqong.zhong

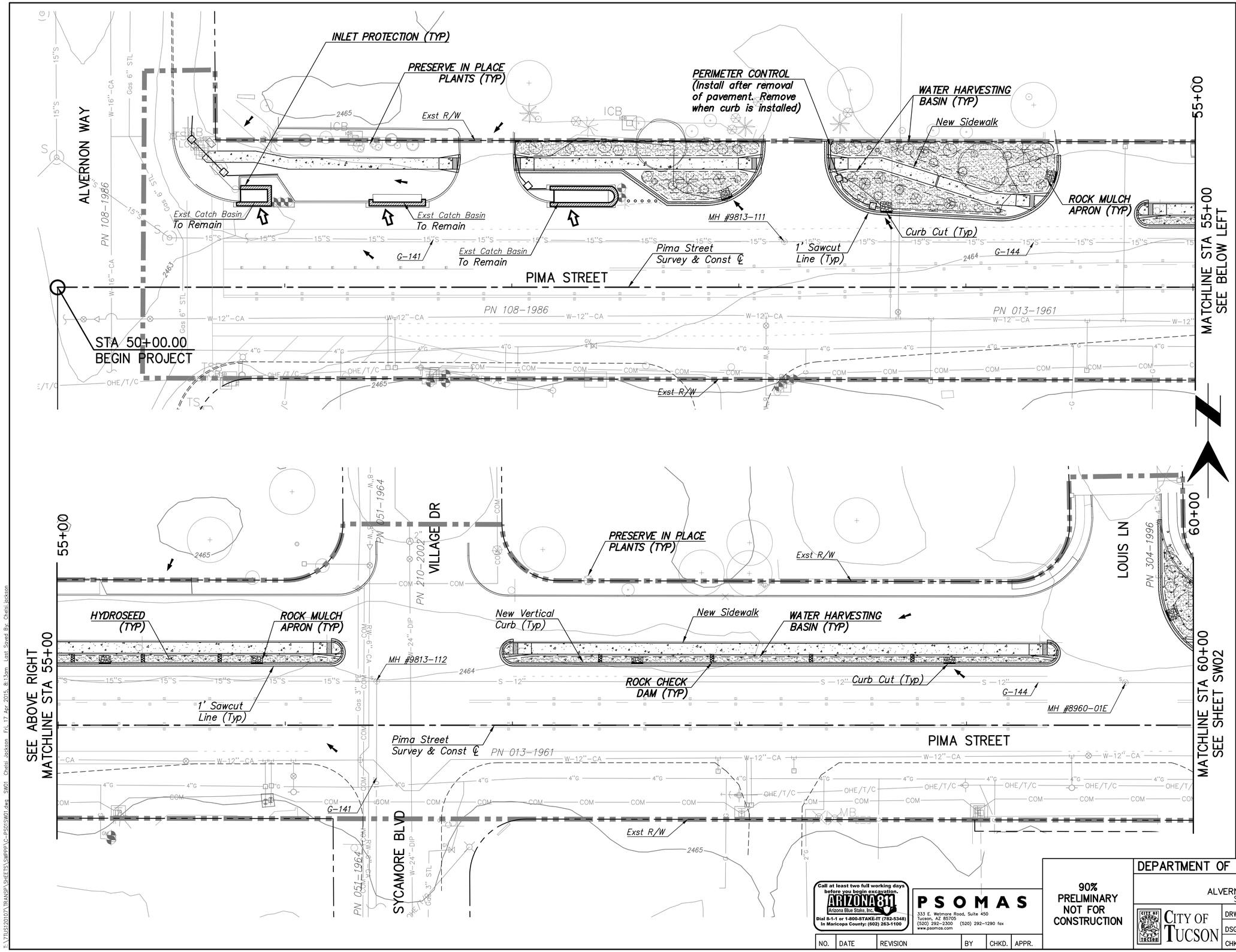

LEGEND

- CONTAINMENT AREA & RAIN GAUGE (Final Location to be Determined by Operator) Material Storage/Use Area (ADOT 5.7.1/2) Concrete Washout Area (ADOT 5.7.8) Sanitary Facilities (CalTrans WM-9) Spill Response Equipment (ADOT 5.7.4)
- HYDROSEED (ADOT 5.1.5) (Temporary Structural Stabilization Measure, See Landscape Plans for Seed Mix)
- ROCK MULCH (See Landscape Plans) (Permanent Stabilization Measure)
- PERIMETER CONTROL SEDIMENT WATTLE (ADOT ES3) -OR- SEDIMENT CONTROL BERM (ADOT ES5) (Temp. Erosion Control, Operator to Select)
- VELOCITY DISSIPATER SEDIMENT WATTLE (ADOT ES3) -OR- GRAVEL BAG BERM (ADOT ES8) (Temp. Erosion Control, Operator to Select)
- ROCK CHECK DAM (Permanent Erosion Control Measure, See Landscape Plans)
- INLET PROTECTION (ADOT ES13)
- EXISTING CONDITIONS FLOW ARROW
- LIMITS OF DISTURBANCE (Area Outside Limits Not to be Disturbed)
- MS4 DISCHARGE LOCATION

DETAILS TO BE FOUND IN SWPPP BOOK APPENDIX B

NOTES:

1) Operator will determine final location of Stabilized Construction Entrances according to site conditions. Entrances will be located where dirt meets paved road to minimize/eliminate trackout.
2) Sweeping required as secondary measure if trackout past Stabilized Construction Entrances is visible.
3) Hydroseed to be used on disturbed areas and slopes. See Landscape Plans for Seed Mix.
4) Erosion/Sediment controls will be placed on all side slope boundaries in lieu of sediment basins.
5) Spill response equipment shall be located within Containment Areas and be accessible. Should an alternate location be determined by Contractor, the new location shall be shown.
6) Disturbed areas where construction halts for a period greater than 14 days will require temporary stabilization measures.
7) Slopes and flow velocities have been checked and are appropriate for the BMP shown at each location.
8) No BMP shall be placed such that ingress and egress access to individual lots is restricted.
9) There are no drywells onsite and no drywells located offsite with the potential to receive stormwater runoff from the site.
10) There are no wetlands within the limits of the project or adjacent to the project.
11) Areas outside the Limits of Disturbance shall remain undisturbed. Should additional areas need to be disturbed, the appropriate parties must be notified. Any project related activities or disturbance beyond the project limits will require historic preservation and cultural resources compliance to have been concluded before any disturbance can occur outside the project limits. The Site Maps/NOI must be updated accordingly.
12) Field modifications to this plan are expected to be made throughout the life of this project. These modifications should be made by a professional taking responsibility for the SWPPP implementation and maintenance. Field changes should indicate project phasing, items necessary due to maintenance and placement of BMP's required to ensure the project meets the conditions of the 2013 Arizona Construction General Permit No. AZG2013-001 and the City of Tucson Stormwater Ordinance.

SYMBOL	TEMPORARY BMP	QUANTITY
	PERIMETER CONTROL SEDIMENT WATTLE (9") (ES3) -OR- SEDIMENT CONTROL BERM (ES5)	122
	VELOCITY DISSIPATION DEVICE SEDIMENT WATTLE (9") (ES3) -OR- GRAVEL BAG BERM (ES8)	0
	INLET PROTECTION (ES13)	134

*Hydroseed, Rock Mulch and Rock Check Dam Quantities located on Landscape Plans. Rock Mulch specifications on Landscape Plans.

20 0 10 20 30 40

UPC-2014-198

Call at least two full working days before you begin excavation. ARIZONA 811 Arizona Blue Stake, Inc. Dial 8-1-1 or 1-800-STAKE-IT (782-5348) In Maricopa County: (602) 263-1100

PSOMAS
333 E. Wetmore Road, Suite 450
Tucson, AZ 85705
(520) 292-2300 (520) 292-1290 fax
www.psomas.com

NO.	DATE	REVISION	BY	CHKD.	APPR.

90% PRELIMINARY NOT FOR CONSTRUCTION

DEPARTMENT OF TRANSPORTATION/ENGINEERING DIVISION

PIMA STREET
ALVERNON WAY TO COLUMBUS BOULEVARD
Stormwater Pollution Prevention Plan

CITY OF TUCSON

DRWN. BY CRJ	04/15	REF. _____ SCALE: 1"=20'
DSGN. BY CRJ	04/15	N/A
CHKD. BY AA	04/15	PLAN NO. U-2014-021

SW01 OF SW03

14 OF 22

P:\TUS120107\TRANSP\SHEETS\SWPPP\C-PS01SW01.dwg SW01 Chelsi Jackson Fri, 17 Apr 2015, 8:13am Last Saved By: Chelsi Jackson

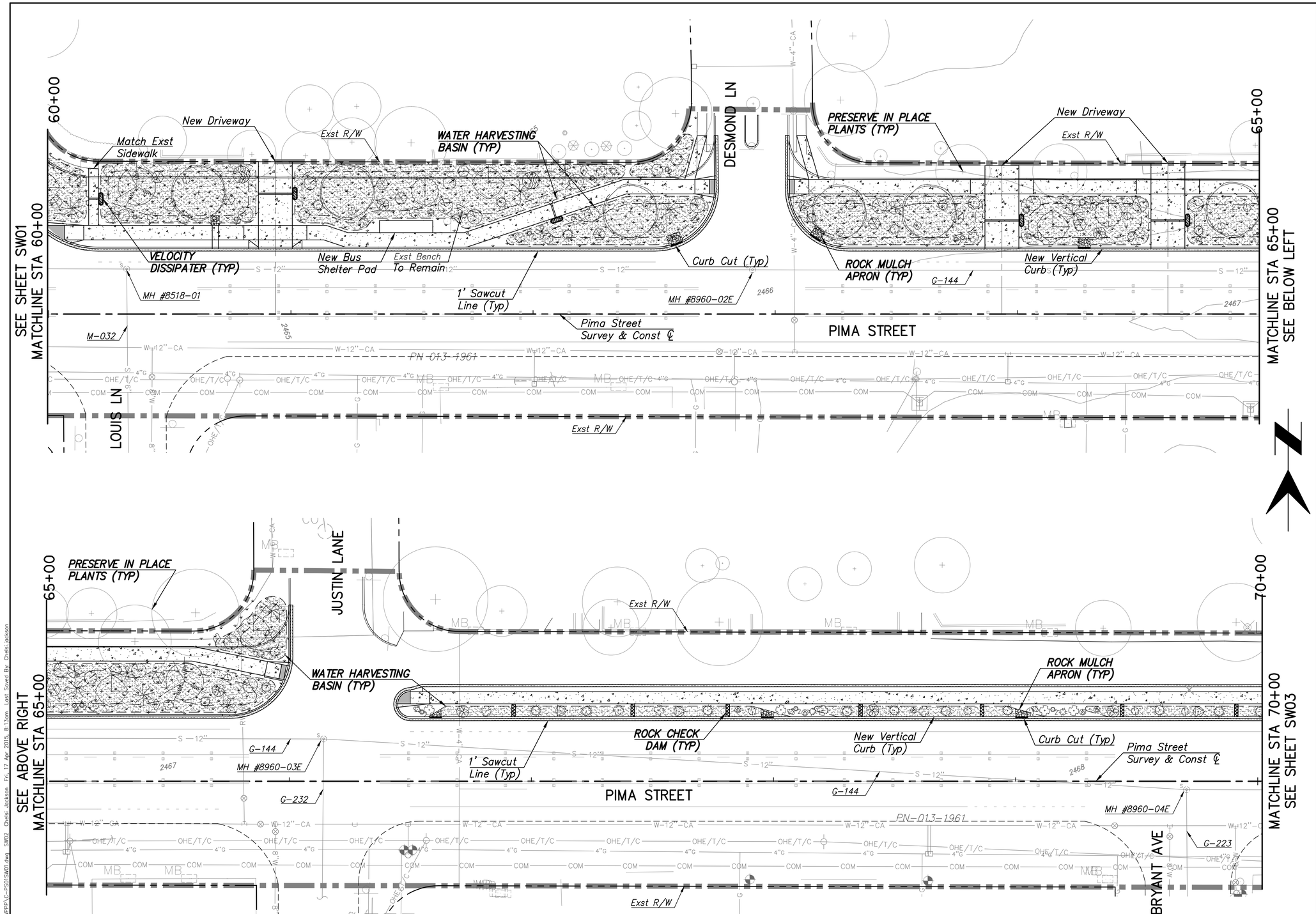

LEGEND

- **CONTAINMENT AREA & RAIN GAUGE** (Final Location to be Determined by Operator)
  Material Storage/Use Area (ADOT 5.7.1/2)
  Concrete Washout Area (ADOT 5.7.8)
  Sanitary Facilities (CalTrans WM-9)
  Spill Response Equipment (ADOT 5.7.4)
- **HYDROSEED** (ADOT 5.1.5) (Temporary Structural Stabilization Measure, See Landscape Plans for Seed Mix)
- **ROCK MULCH** (See Landscape Plans) (Permanent Stabilization Measure)
- **PERIMETER CONTROL** SEDIMENT WATTLE (ADOT ES3) -OR- SEDIMENT CONTROL BERM (ADOT ES5) (Temp. Erosion Control, Operator to Select)
- **VELOCITY DISSIPATER** SEDIMENT WATTLE (ADOT ES3) -OR- GRAVEL BAG BERM (ADOT ES8) (Temp. Erosion Control, Operator to Select)
- ROCK CHECK DAM (Permanent Erosion Control Measure, See Landscape Plans)
- **INLET PROTECTION** (ADOT ES13)
- **EXISTING CONDITIONS FLOW ARROW**
- **LIMITS OF DISTURBANCE** (Area Outside Limits Not to be Disturbed)
- **MS4 DISCHARGE LOCATION**

DETAILS TO BE FOUND IN SWPPP BOOK APPENDIX B

NOTES:

1) Operator will determine final location of Stabilized Construction Entrances according to site conditions. Entrances will be located where dirt meets paved road to minimize/eliminate trackout.
2) Sweeping required as secondary measure if trackout past Stabilized Construction Entrances is visible.
3) Hydroseed to be used on disturbed areas and slopes. See Landscape Plans for Seed Mix.
4) Erosion/Sediment controls will be placed on all side slope boundaries in lieu of sediment basins.
5) Spill response equipment shall be located within Containment Areas and be accessible. Should an alternate location be determined by Contractor, the new location shall be shown.
6) Disturbed areas where construction halts for a period greater than 14 days will require temporary stabilization measures.
7) Slopes and flow velocities have been checked and are appropriate for the BMP shown at each location.
8) No BMP shall be placed such that ingress and egress access to individual lots is restricted.
9) There are no drywells onsite and no drywells located offsite with the potential to receive stormwater runoff from the site.
10) There are no wetlands within the limits of the project or adjacent to the project.
11) Areas outside the Limits of Disturbance shall remain undisturbed. Should additional areas need to be disturbed, the appropriate parties must be notified. Any project related activities or disturbance beyond the project limits will require historic preservation and cultural resources compliance to have been concluded before any disturbance can occur outside the project limits. The Site Maps/NOI must be updated accordingly.
12) Field modifications to this plan are expected to be made throughout the life of this project. These modifications should be made by a professional taking responsibility for the SWPPP implementation and maintenance. Field changes should indicate project phasing, items necessary due to maintenance and placement of BMP's required to ensure the project meets the conditions of the 2013 Arizona Construction General Permit No. AZG2013-001 and the City of Tucson Stormwater Ordinance.

SYMBOL	TEMPORARY BMP	QUANTITY
	PERIMETER CONTROL SEDIMENT WATTLE (9") (ES3) -OR- SEDIMENT CONTROL BERM (ES5)	0
	VELOCITY DISSIPATION DEVICE SEDIMENT WATTLE (9") (ES3) -OR- GRAVEL BAG BERM (ES8)	25
	INLET PROTECTION (ES13)	0

*Hydroseed, Rock Mulch and Rock Check Dam Quantities located on Landscape Plans. Rock Mulch specifications on Landscape Plans.

20 0 10 20 30 40

UPC-2014-198

Call at least two full working days before you begin excavation.
ARIZONA 811
Arizona Blue Stake, Inc.
Dial 8-1-1 or 1-800-STAKE-IT (782-5348)
In Maricopa County: (602) 263-1100

PSOMAS
333 E. Wetmore Road, Suite 450
Tucson, AZ 85705
(520) 292-2300 (520) 292-1290 fax
www.psomas.com

NO.	DATE	REVISION	BY	CHKD.	APPR.

90% PRELIMINARY NOT FOR CONSTRUCTION

DEPARTMENT OF TRANSPORTATION/ENGINEERING DIVISION

PIMA STREET
ALVERNON WAY TO COLUMBUS BOULEVARD
Stormwater Pollution Prevention Plan

CITY OF TUCSON

DRWN. BY CRJ	04/15	REF. _____ SCALE: 1"=20'
DSGN. BY CRJ	04/15	N/A
CHKD. BY AA	04/15	PLAN NO. U-2014-021

SW02 OF SW03

15 OF 22

P:\TUS120107\TRANSP\SHEETS\SWPPP\C-PSD1SW01.dwg SW02 Chelsi Jackson Fri, 17 Apr 2015, 8:13am Last Saved By: Chelsi Jackson

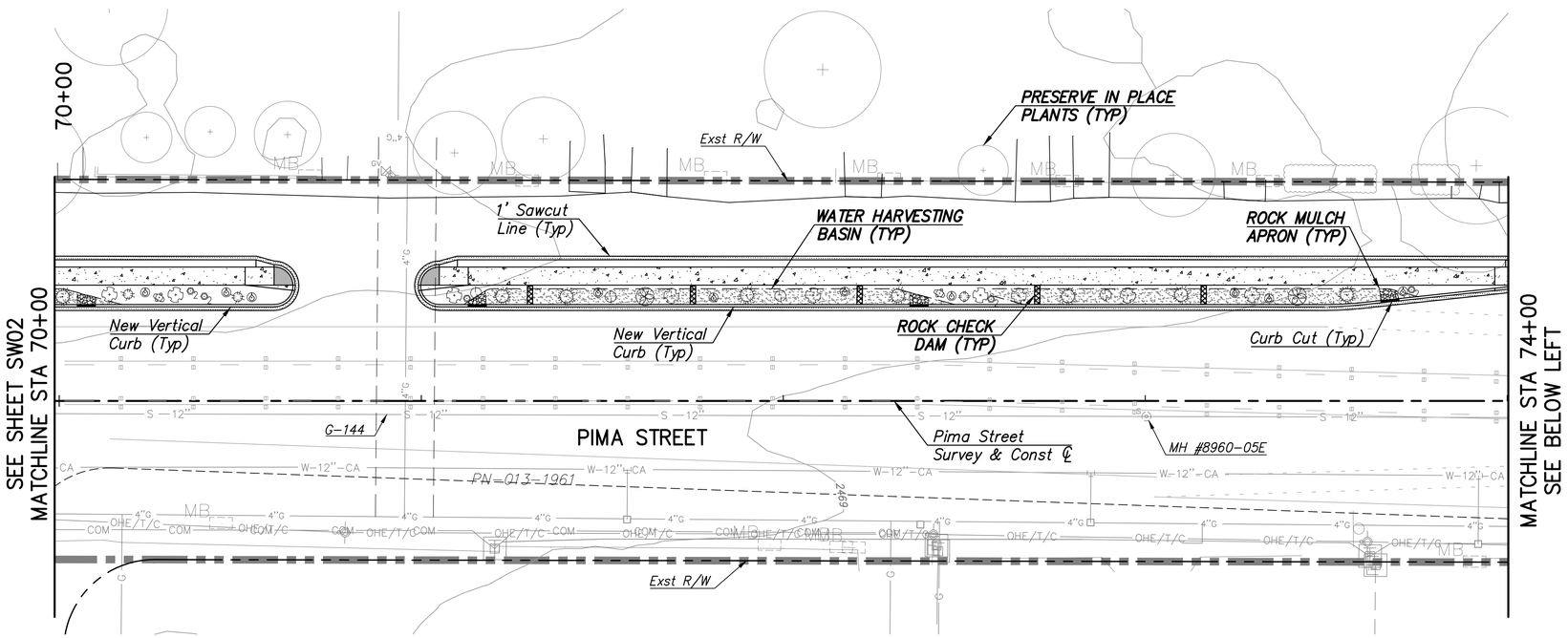

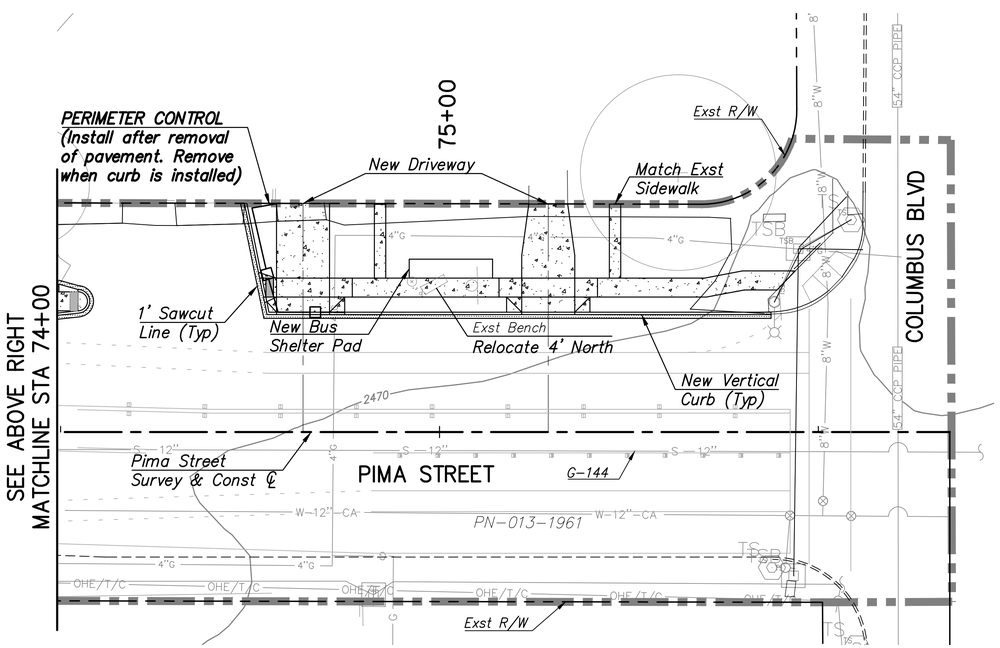

LEGEND

- CONTAINMENT AREA & RAIN GAUGE (Final Location to be Determined by Operator) Material Storage/Use Area (ADOT 5.7.1/2) Concrete Washout Area (ADOT 5.7.8) Sanitary Facilities (CalTrans WM-9) Spill Response Equipment (ADOT 5.7.4)
- HYDROSEED (ADOT 5.1.5) (Temporary Structural Stabilization Measure, See Landscape Plans for Seed Mix)
- ROCK MULCH (See Landscape Plans) (Permanent Stabilization Measure)
- PERIMETER CONTROL SEDIMENT WATTLE (ADOT ES3) -OR- SEDIMENT CONTROL BERM (ADOT ES5) (Temp. Erosion Control, Operator to Select)
- VELOCITY DISSIPATER SEDIMENT WATTLE (ADOT ES3) -OR- GRAVEL BAG BERM (ADOT ES8) (Temp. Erosion Control, Operator to Select)
- ROCK CHECK DAM (Permanent Erosion Control Measure, See Landscape Plans)
- INLET PROTECTION (ADOT ES13)
- EXISTING CONDITIONS FLOW ARROW
- LIMITS OF DISTURBANCE (Area Outside Limits Not to be Disturbed)
- MS4 DISCHARGE LOCATION

DETAILS TO BE FOUND IN SWPPP BOOK APPENDIX B

NOTES:

1) Operator will determine final location of Stabilized Construction Entrances according to site conditions. Entrances will be located where dirt meets paved road to minimize/eliminate trackout.
2) Sweeping required as secondary measure if trackout past Stabilized Construction Entrances is visible.
3) Hydroseed to be used on disturbed areas and slopes. See Landscape Plans for Seed Mix.
4) Erosion/Sediment controls will be placed on all side slope boundaries in lieu of sediment basins.
5) Spill response equipment shall be located within Containment Areas and be accessible. Should an alternate location be determined by Contractor, the new location shall be shown.
6) Disturbed areas where construction halts for a period greater than 14 days will require temporary stabilization measures.
7) Slopes and flow velocities have been checked and are appropriate for the BMP shown at each location.
8) No BMP shall be placed such that ingress and egress access to individual lots is restricted.
9) There are no drywells onsite and no drywells located offsite with the potential to receive stormwater runoff from the site.
10) There are no wetlands within the limits of the project or adjacent to the project.
11) Areas outside the Limits of Disturbance shall remain undisturbed. Should additional areas need to be disturbed, the appropriate parties must be notified. Any project related activities or disturbance beyond the project limits will require historic preservation and cultural resources compliance to have been concluded before any disturbance can occur outside the project limits. The Site Maps/NOI must be updated accordingly.
12) Field modifications to this plan are expected to be made throughout the life of this project. These modifications should be made by a professional taking responsibility for the SWPPP implementation and maintenance. Field changes should indicate project phasing, items necessary due to maintenance and placement of BMP's required to ensure the project meets the conditions of the 2013 Arizona Construction General Permit No. AZG2013-001 and the City of Tucson Stormwater Ordinance.

SYMBOL	TEMPORARY BMP	QUANTITY
	PERIMETER CONTROL SEDIMENT WATTLE (9") (ES3) -OR- SEDIMENT CONTROL BERM (ES5)	55
	VELOCITY DISSIPATION DEVICE SEDIMENT WATTLE (9") (ES3) -OR- GRAVEL BAG BERM (ES8)	0
	INLET PROTECTION (ES13)	0

*Hydroseed, Rock Mulch and Rock Check Dam Quantities located on Landscape Plans. Rock Mulch specifications on Landscape Plans.

20 0 10 20 30 40

UPC-2014-198

Call at least two full working days before you begin excavation. ARIZONA 811 Arizona Blue Stake, Inc. Dial 8-1-1 or 1-800-STAKE-IT (782-5348) In Maricopa County: (602) 263-1100

PSOMAS
333 E. Wetmore Road, Suite 450
Tucson, AZ 85705
(520) 292-2300 (520) 292-1290 fax
www.psomas.com

NO.	DATE	REVISION	BY	CHKD.	APPR.

90% PRELIMINARY NOT FOR CONSTRUCTION

DEPARTMENT OF TRANSPORTATION/ENGINEERING DIVISION

PIMA STREET
ALVERNON WAY TO COLUMBUS BOULEVARD
Stormwater Pollution Prevention Plan

CITY OF TUCSON

DRWN. BY CRJ	04/15	REF.	SCALE: 1"=20'
DSGN. BY CRJ	04/15		N/A
CHKD. BY AA	04/15	PLAN NO. U-2014-021	

SW03 OF SW03

16 OF 22

I:\TUS12107\TRANSP\SHEETS\SWPPP\C-PS015W01.dwg SW03 Chelsi Jackson Fri, 17 Apr 2015, 8:13am Last Saved By: Chelsi Jackson

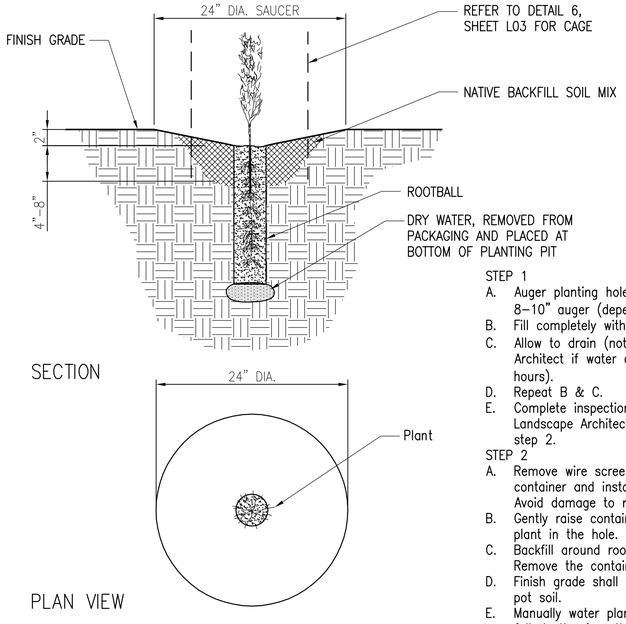

STEP 1
A. Auger planting hole to fit container using an 8–10" auger (dependent on soil type).
B. Fill completely with water.
C. Allow to drain (notify project Landscape Architect if water does not drain within 48 hours).
D. Repeat B & C.
E. Complete inspection of pits by project Landscape Architect prior to proceeding to step 2.

STEP 2
A. Remove wire screen from bottom of tall pot container and install container in the hole. Avoid damage to root system.
B. Gently raise container leaving the tall pot plant in the hole.
C. Backfill around rootball as container is raised. Remove the container completely.
D. Finish grade shall match level of original tall pot soil.
E. Manually water plant with a deep irrigation to full depth of rootball.

1 TALL POT PLANTING DETAIL

1"=1'–0"

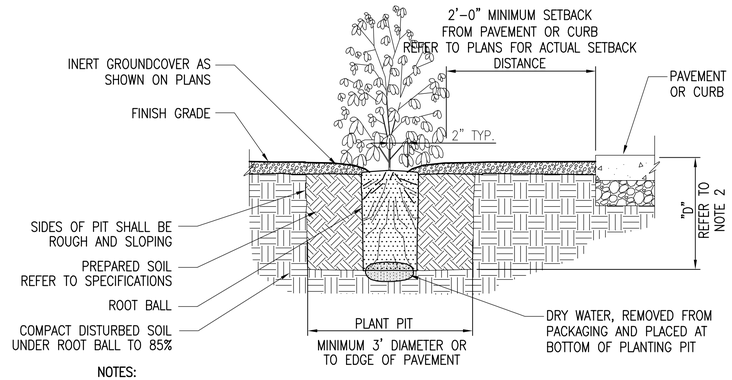

NOTES:
1. No plants shall be pruned except at the direction of the owner's representative.
2. Depth ("D") of plant pit to be equal to depth of rootball.
3. Test planting pit drainage and provide drainage chimneys as required by specifications.
4. Finish grade of root ball shall match finish grade of surrounding soil. Root ball may be placed up to 1" above surrounding soil to allow for settling.
5. Do not place inert groundcover at base of plant.

2 TREE/SHRUB PLANTING DETAIL

N.T.S.

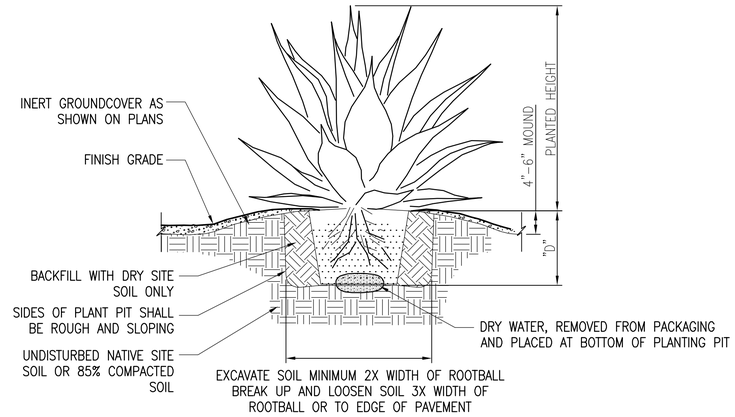

NOTES:
1. Agaves and other succulents planted in a basin shall be mounded 4"–6" high.
2. Depth ("D") of plant pit to be equal to depth of rootball.
3. Maintain intact rootball. Root prune all shredded or damaged roots. Ensure that all wounds to the root system are clean cut before planting.

3 AGAVE & SUCCULENT PLANTING DETAIL

N.T.S.

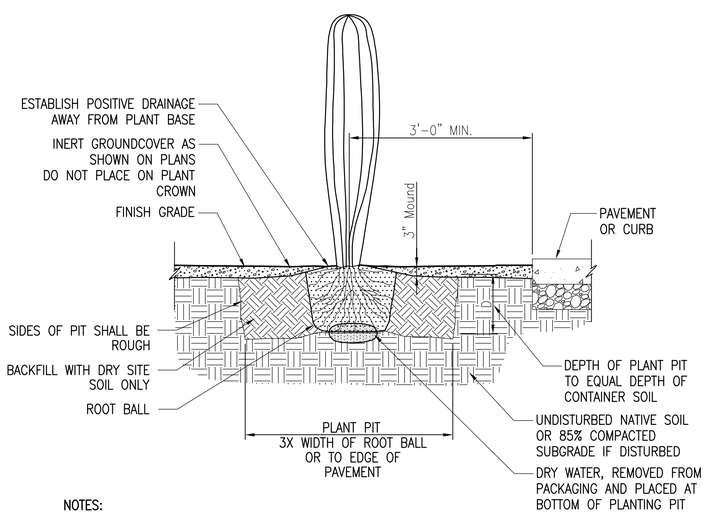

NOTES:
1. Planting depth to be at same depth plant was originally grown.
2. All saguaro placements must match original orientation with original north side facing north. North side of plants to be marked by nursery and/or landscape contractor. Refer to Specifications.
2. Finish grade of root ball shall match finish grade of surrounding soil. Root ball may be placed up to 1" above to allow for settling. Do not place inert groundcover mix at base of plant.

4 SAGUARO PLANTING (CONTAINER GROWN)

N.T.S.

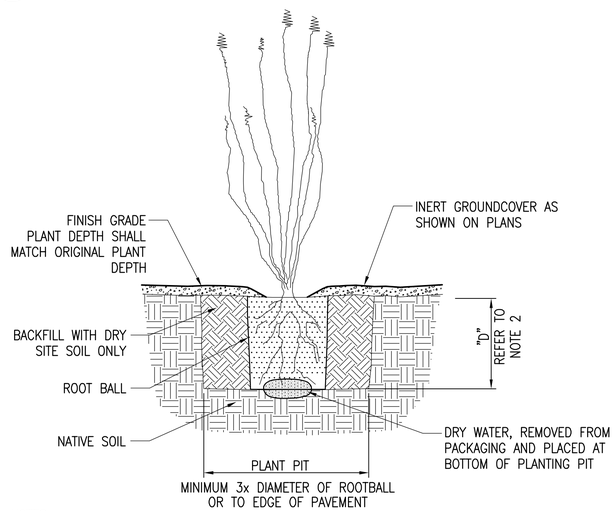

NOTES:
1. No plants shall be pruned except at the direction of the owner's representative.
2. Depth ("D") of plant pit to be equal to depth of rootball.
3. Test planting pit drainage and provide drainage chimneys as required by Specifications.
4. Finish grade of root ball shall match finish grade of surrounding soil. Root ball may be placed up to 1" above surrounding soil to allow for settling. Do not place mulch at base of plant.

5 OCOTILLO PLANTING (CONTAINER GROWN)

N.T.S.

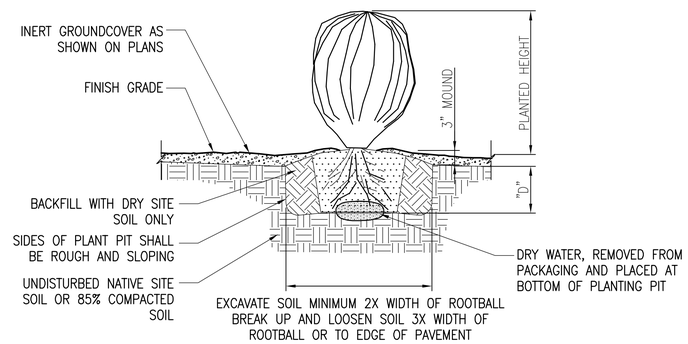

NOTES:
1. For field grown cacti, plant placements must match original orientation with original north side facing north. North side of plants to be marked by the nursery. For indoor propagated cacti, all plants must be shaded with shade cloth for spring and summer planting.
2. Depth ("D") of plant pit to be equal to depth of rootball.
3. Maintain intact rootball. Root prune all shredded or damaged roots. Ensure that all wounds to the root system are clean cut before planting.

6 CACTUS PLANTING DETAIL

N.T.S.

LANDSCAPE DETAIL SHEET

WHEAT DESIGN GROUP
LANDSCAPE ARCHITECTS

Call at least two full working days before you begin excavation.
ARIZONA 811
Arizona Blue Stake, Inc.
Dial 8-1-1 or 1-800-STAKE-IT (782-5348)
In Maricopa County: (602) 263-1100

PSOMAS
333 E. Wetmore Road, Suite 450
Tucson, AZ 85705
(520) 292–2300 (520) 292–1290 fax
www.psomas.com

NO.	DATE	REVISION	BY	CHKD.	APPR.

90% PRELIMINARY NOT FOR CONSTRUCTION

DEPARTMENT OF TRANSPORTATION/ENGINEERING DIVISION
PIMA PEDESTRIAN PATH
ALVERNON WAY TO COLUMBUS BOULEVARD

CITY OF TUCSON

DRWN. BY CM, IO
DSGN. BY CM
CHKD. BY LM 04/15
REF. SCALE:
PLAN NO. U–2014–021

L01 OF L06

17 OF 22

M:\COT Pima Ped Path-14803-Data\Sheet Files\COT-PimaPed-L01-Dtl.dwg Layout1 Chelsea Marshall Wed, 15 Apr 2015, 5:07pm Last Saved By: Cmarshall

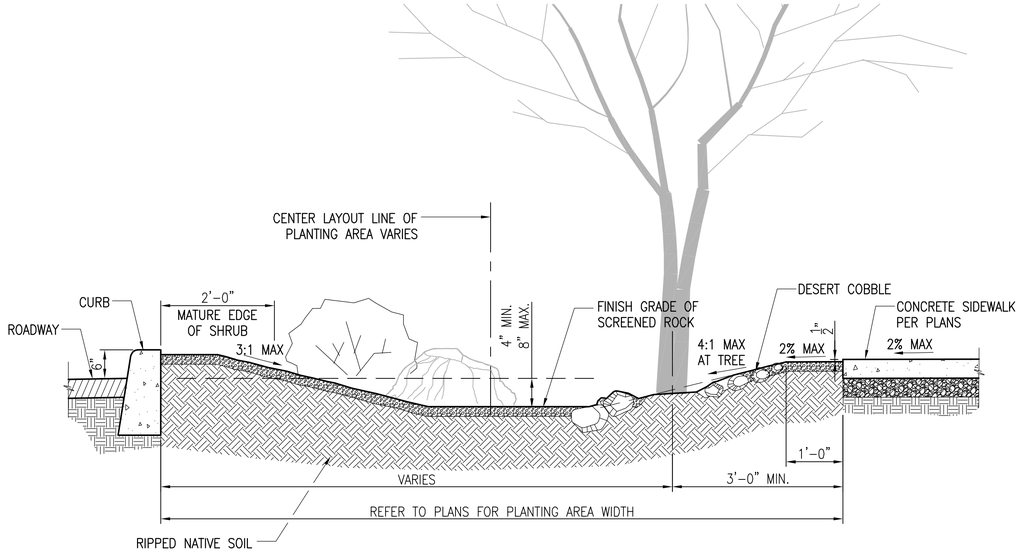

NOTES:
1. Refer to Specifications for rock mulch and desert cobble rock color, size and installation.
2. Depth of planting areas is dependent on width of planting area not to exceed 8" below top of roadway pavement.
4. Basins shall be located 10'-0" min. away from face of building.
5. Rip soil in planting areas to a depth of 8". Refer to Specifications for drainage requirements.

1 WATER HARVESTING BASIN (SECTION)

3/4"=1'-0"

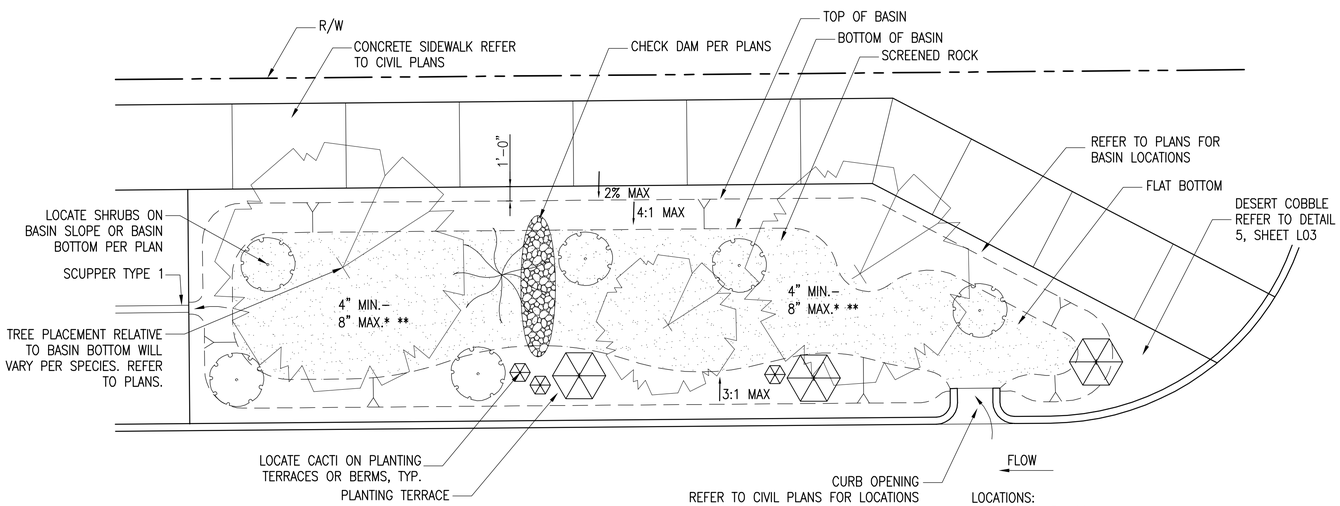

*FROM ROADWAY SURFACE/ BOTTOM OF CURB.
** UNLESS OTHERWISE NOTED

LOCATIONS:
STA. 53+50-54+00
STA. 60+00-66+00

MEDIANS BETWEEN STA. 54+75 TO 59+50 TO RECIEVE ONLY DESERT COBBLE, NO SCREENED ROCK.

2 WATER HARVESTING BASIN (PLAN)

3/16"=1'-0

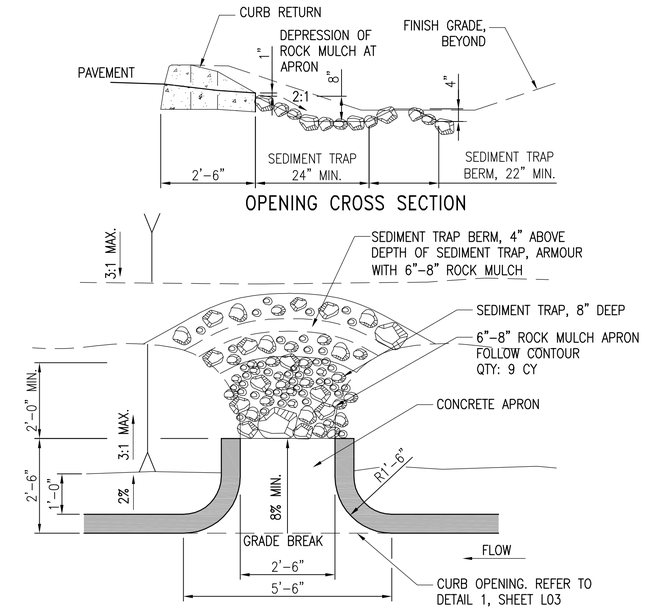

3 LANDSCAPE GRADING AT CONCRETE CURB OPENING TYPE A

1/2"=1'-0"

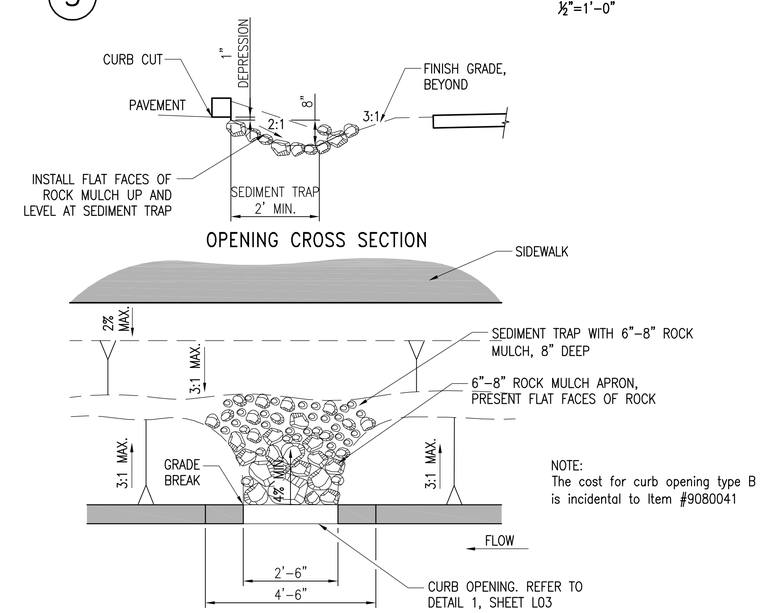

NOTE:
The cost for curb opening type B is incidental to Item #9080041

4 LANDSCAPE GRADING AT CONCRETE CURB OPENING TYPE B

1/2"=1'-0"

LANDSCAPE DETAIL SHEET

WHEAT DESIGN GROUP
LANDSCAPE ARCHITECTS

Call at least two full working days before you begin excavation.
ARIZONA 811
Arizona Blue Stake, Inc.
Dial 8-1-1 or 1-800-STAKE-IT (782-5348)
In Maricopa County: (602) 263-1100

PSOMAS
333 E. Wetmore Road, Suite 450
Tucson, AZ 85705
(520) 292-2300 (520) 292-1290 fax
www.psomas.com

NO.	DATE	REVISION	BY	CHKD.	APPR.

90% PRELIMINARY NOT FOR CONSTRUCTION

DEPARTMENT OF TRANSPORTATION/ENGINEERING DIVISION
PIMA PEDESTRIAN PATH
ALVERNON WAY TO COLUMBUS BOULEVARD

CITY OF TUCSON

DRWN. BY CM, IO
DSGN. BY CM
CHKD. BY LM 04/15

REF. _____ SCALE: _____
PLAN NO. U-2014-021

M:\COT Pima Ped Path-14803-Data\Sheet Files\COT-PimaPed-L02-Dtl.dwg Layout1 Chelsea Marshall Thu, 16 Apr 2015, 11:25am Last Saved By: Cmarshall

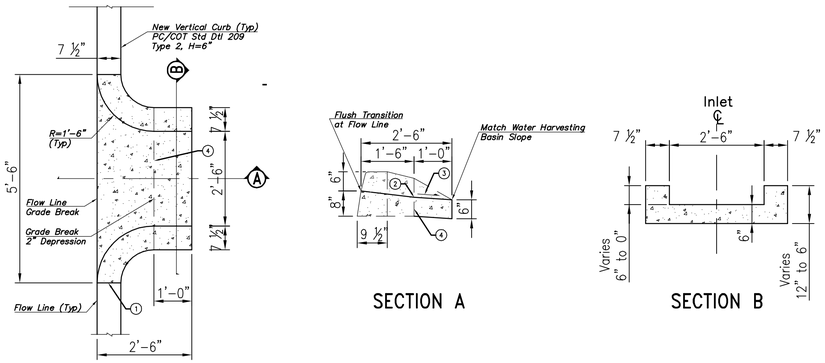

SECTION A

SECTION B

CONCRETE CURB OPENING

NOTE:
1. Refer to Landscaping Plans for additional water harvesting details and plans.
2. Concrete curb opening shall be paid for under Item 9080042, Concrete Curb Opening (Water Harvesting).

① ½" Bituminous Joint Filler
② 2" Depression
③ Slope to match water harvesting basin. 0.5% min and 8% max.
④ Construction Joint (Optional) with ½" Bituminous Filler.

1 CONCRETE CURB OPENING TYPE A

½"=1'-0"

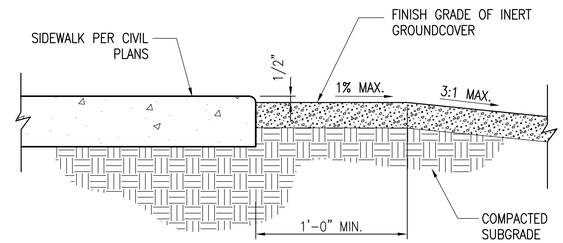

Notes:
1. Refer to Specifications for inert groundcover.

2 FINISH GRADE AT CONCRETE PAVEMENT

1"=1'-0"

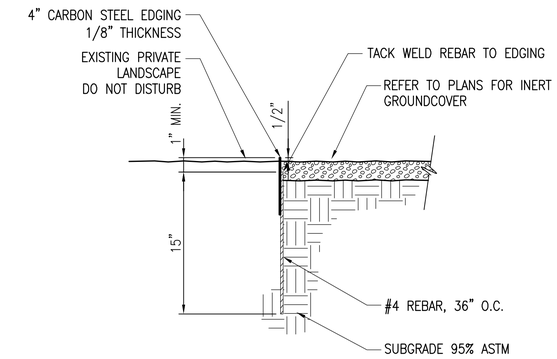

3 STEEL EDGER

1 ½"=1'-0"

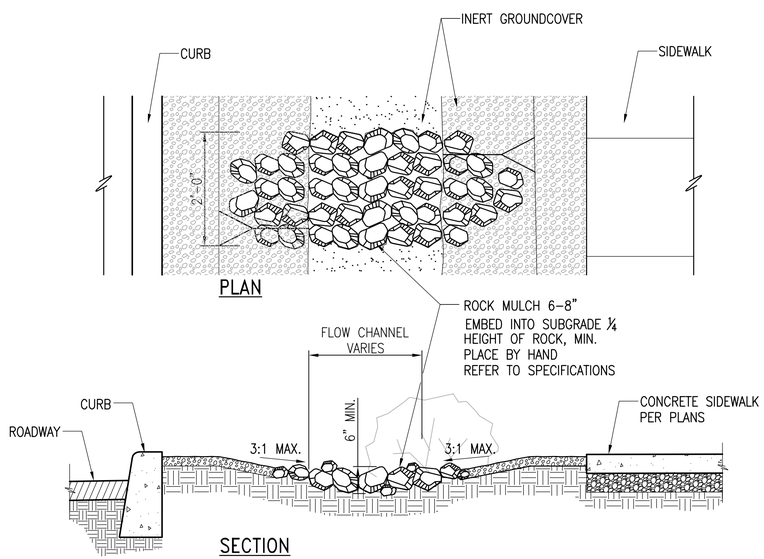

4 ROCK CHECK DAM

¾"=1'-0"

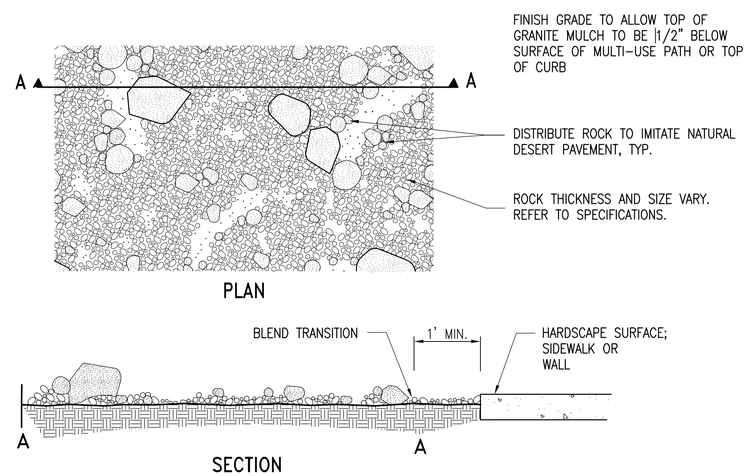

NOTES:
1. Refer to Specifications for rock size, color and installation.
2. Place only 1" or smaller screened rock within 1'-0" from all walking surfaces and walls to ensure an even surface within these zones. Provide a blended transition.

5 DESERT COBBLE

1"=1'-0"

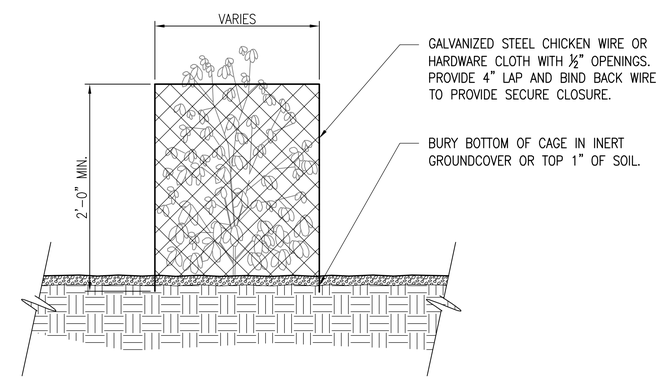

6 PLANT PROTECTION CAGES

1"=1'-0"

LANDSCAPE DETAIL SHEET

WHEAT DESIGN GROUP
LANDSCAPE ARCHITECTS

Call at least two full working days before you begin excavation.
ARIZONA 811
Arizona Blue Stake, Inc.
Dial 8-1-1 or 1-800-STAKE-IT (782-5348)
In Maricopa County: (602) 263-1100

PSOMAS
333 E. Wetmore Road, Suite 450
Tucson, AZ 85705
(520) 292-2300 (520) 292-1290 fax
www.psomas.com

NO.	DATE	REVISION	BY	CHKD.	APPR.

90% PRELIMINARY NOT FOR CONSTRUCTION

DEPARTMENT OF TRANSPORTATION/ENGINEERING DIVISION
PIMA PEDESTRIAN PATH
ALVERNON WAY TO COLUMBUS BOULEVARD

CITY OF TUCSON

DRWN. BY CM, IO
DSGN. BY CM
CHKD. BY LM 04/15
REF. SCALE:
PLAN NO. U-2014-021

L03 OF L06

19 OF 22

M:\COT Pima Ped Path-14803-Data\Sheet Files\C03-PimaPed-L03-Dtl.dwg Layout1 Chelsea Marshall Thu, 16 Apr 2015, 9:41am Last Saved By: Cmarshall

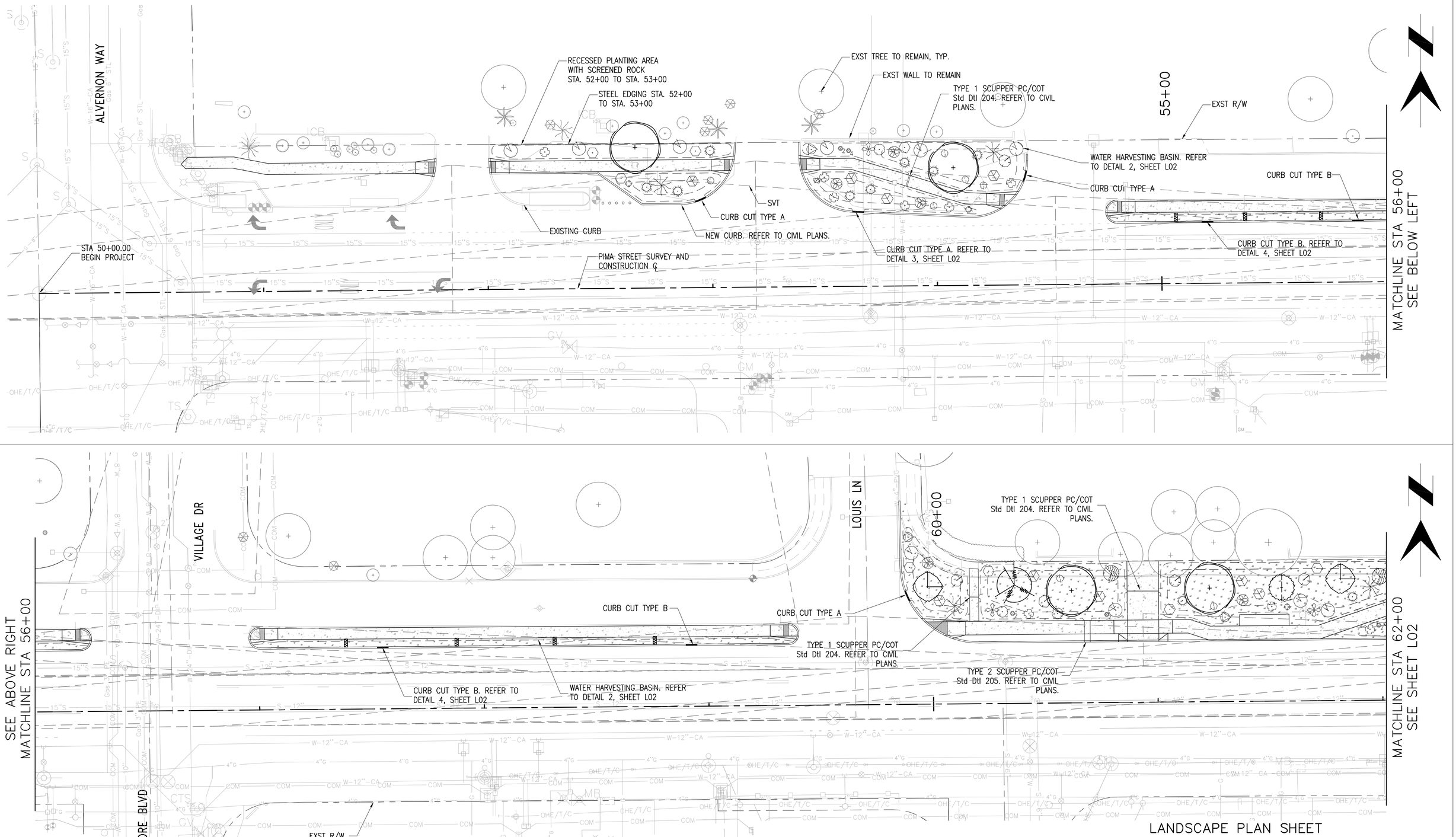

NOTE:
REFER TO SHEET L06 FOR PLANT AND INERT SCHEDULES

WHEAT DESIGN GROUP
LANDSCAPE ARCHITECTS

Call at least two full working days before you begin excavation.
ARIZONA 811
Arizona Blue Stake, Inc.
Dial 8-1-1 or 1-800-STAKE-IT (782-5348)
In Maricopa County: (602) 263-1100

PSOMAS
333 E. Wetmore Road, Suite 450
Tucson, AZ 85705
(520) 292-2300 (520) 292-1290 fax
www.psomas.com

NO.	DATE	REVISION	BY	CHKD.	APPR.

90% PRELIMINARY NOT FOR CONSTRUCTION

DEPARTMENT OF TRANSPORTATION/ENGINEERING DIVISION
PIMA PEDESTRIAN PATH
ALVERNON WAY TO COLUMBUS BOULEVARD

CITY OF TUCSON

DRWN. BY CM, IO
DSGN. BY CM
CHKD. BY LM 04/15

REF. _____ SCALE: _____
PLAN NO. U-2014-021

L04 OF L06

20 OF 22

M:\COT Pima Ped Path-14803-Data\Sheet Files\COT-PimaPed-L04.dwg Layout1 Chelsea Marshall Thu, 16 Apr 2015, 11:47am Last Saved By: Cmarshall

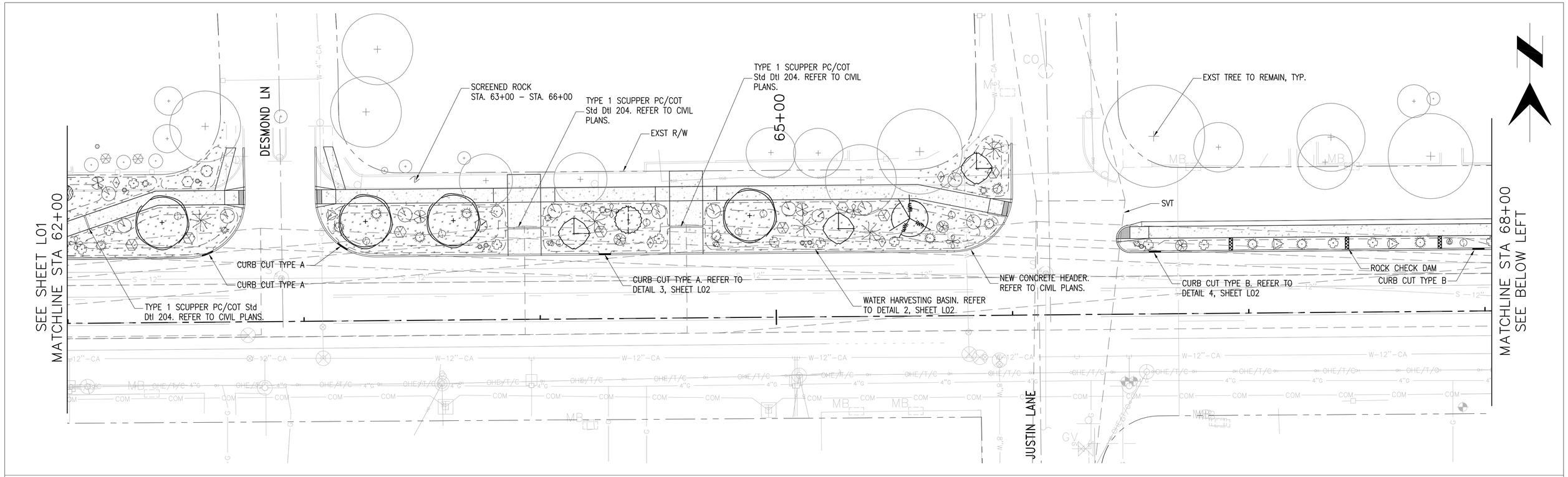

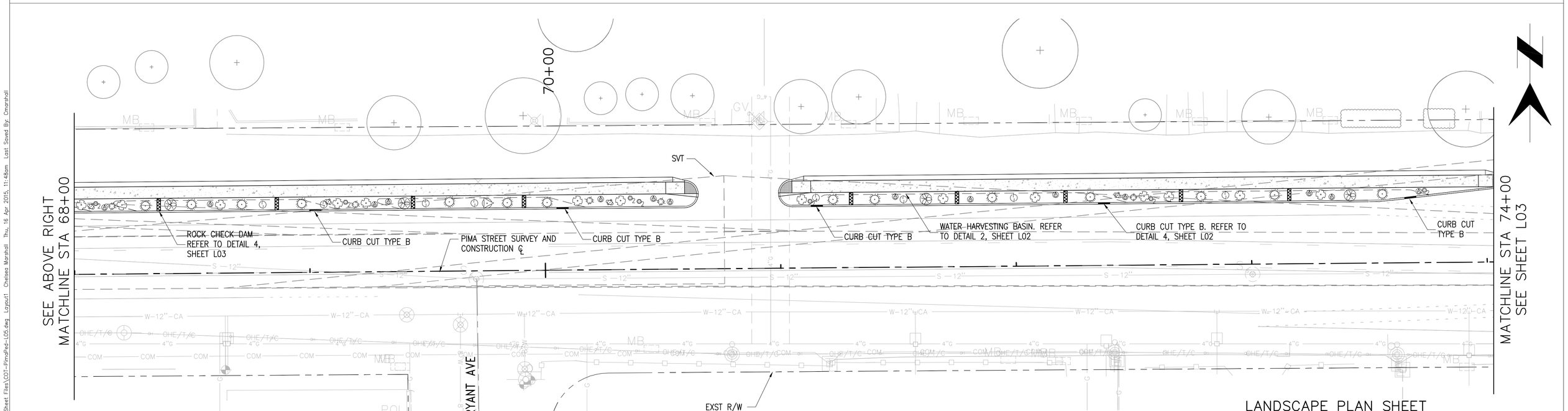

LANDSCAPE PLAN SHEET

NOTE:
REFER TO SHEET L06 FOR PLANT AND INERT SCHEDULES

WHEAT | DESIGN GROUP
LANDSCAPE ARCHITECTS

Call at least two full working days before you begin excavation.
ARIZONA 811
Arizona Blue Stake, Inc.
Dial 8-1-1 or 1-800-STAKE-IT (782-5348)
In Maricopa County: (602) 263-1100

PSOMAS
333 E. Wetmore Road, Suite 450
Tucson, AZ 85705
(520) 292-2300 (520) 292-1290 fax
www.psomas.com

NO.	DATE	REVISION	BY	CHKD.	APPR.

90%
PRELIMINARY
NOT FOR
CONSTRUCTION

DEPARTMENT OF TRANSPORTATION/ENGINEERING DIVISION
PIMA PEDESTRIAN PATH
ALVERNON WAY TO COLUMBUS BOULEVARD

CITY OF TUCSON

DRWN. BY CM, IO
DSGN. BY CM
CHKD. BY LM 04/15

REF. _____ SCALE: _____
PLAN NO. U-2014-021

L05 OF L06

21 OF 22

M:\COT Pima Ped Path-14803-Data\Sheet Files\COT-PimaPed-L05.dwg Layout1 Chelsea Marshall Thu, 16 Apr 2015, 11:48am Last Saved By: Cmarshall

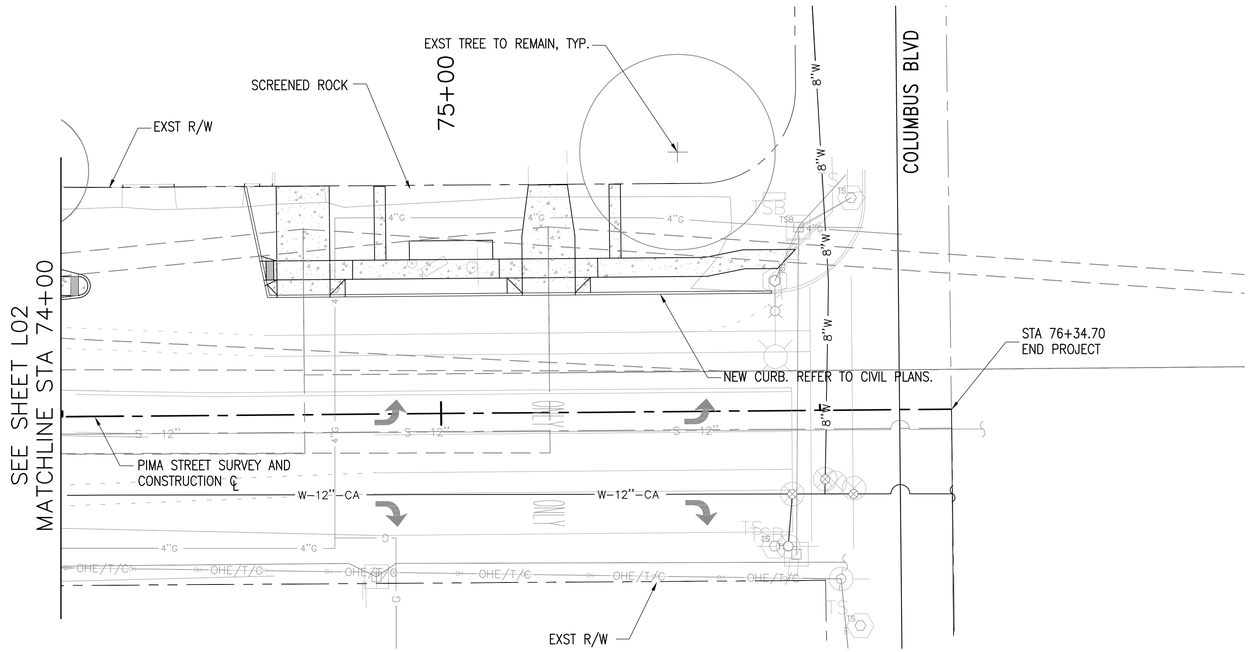

HARDSCAPE MATERIALS SCHEDULE

SYMBOL	ITEM	SIZE	DETAIL	QTY
	Basin		5/L02	
	Concrete Curb Opening (Refer to Detail 1, Sheet L03 for Curb Construction)	Type A Type B	3/L02 4/L02	5 13
	Rock Check Dam	4 LF 6 LF	4/L03	7 13
	Scupper PC/COT Std Dtl 204 PC/COT Std Dtl 205		CIVIL PLANS	6 1
Not Shown	Rock Mulch	6"–8"		
	Desert Cobble	40% 1/2"–2" 60% 3"–6"	5/L03	
	Screened Rock	1/2"		

PLANT MATERIAL SCHEDULE

TREES

SYMBOL	BOTANICAL NAME COMMON NAME	CONTAINER SIZE	QTY
	Acacia greggii Catclaw Acacia	24" Tree Pot	2
	Eysenhardtia orthocarpa Kidneywood	24" Tree Pot*	5
	Olneya tesota Ironwood	24" Tree Pot	8
	Prosopis pubescens Screwbean Mesquite	24" Tree Pot	2
	Existing Tree		

SHRUBS

SYMBOL	BOTANICAL NAME COMMON NAME	CONTAINER SIZE	QTY	MATURE SIZE H X W
	Aloysia gratissima* Bee–brush	15" Tree Pot	12	3' X 3'
	Ambrosia deltoidea* Bur–sage	15" Tree Pot	36	3' X 3'
	Asclepias subulata* Desert Milkweed	15" Tree Pot	15	3' X 3'
	Calliandra eriophylla Sonoran Fairy Duster	15" Tree Pot	36	3' X 4'
	Fouquieria splendens Ocotillo	15 Gallon	9	8' X 12'
	Hyptis emoryi Desert Lavender	24" Tree Pot	2	6' X 6'
	Justicia californica Chuparosa	15" Tree Pot	16	4' X 5'
	Larrea tridentata Creosote	24" Tree Pot	20	6' X 6'
	Lycium berlandieri Wolfberry	24" Tree Pot	7	7' X 6'
	Simmondsia chinensis Jojoba	24" Tree Pot	5	5' X 5'
	Viguiera deltoidea* Goldeneye	15" Tree Pot	24	2.5' X 3'

* 30" Tall Pot may be subsituted for Tree Pot

CACTI–SUCCULENTS

SYMBOL	BOTANICAL NAME COMMON NAME	CONTAINER SIZE	QTY
	Agave palmeri Palmer's Agave	3 Gallon	7
	Carnegiea gigantea Saguaro	2'–3'	19
	Dasylirion wheeleri Desert Spoon	5 Gallon	14
	Echinocereus engelmannii Hedgehog Cactus	3 Gallon	8
	Ferocactus cylindraceus Red Spine Barrel	3 Gallon	10
	Ferocactus wislizenii Fishhook Barrel	3 Gallon	3
	Opuntia engelmannii Engelmann's Prickly Pear	3 Gallon	7
	Opuntia versicolor Staghorn Cholla	3 Gallon	3
	Opuntia molesta Yellow–spine Cholla	3 Gallon	4

SEED MIX

SYMBOL	BOTANICAL NAME COMMON NAME	PERCENT OF TOTAL	TRANSLATION TO 20 PLS/ACRE
	Ambrosia deltoidea Triangle Leaf Bur–sage	15%	3
	Encelia farinosa Brittlebush	15%	3
	Baileya multiradiata Desert Marigold	12%	2.4
	Dyssodia pentachaeta Dogweed	10%	2.0
	Escholtzia mexicana Mexican Poppy	12%	2.4
	Penstemon parryi Parry's Penstemon	12%	2.4
	Sphaeralcea ambigua Globemallow	12%	2.4
	Zinnia acerosa Desert Zinnia	12%	2.4

PLANTING NOTES:

1. Plant quantities shown are for Contractor convenience. Contractor shall verify all plant quantities. Plant quantities shall be derived from plans.
2. Plant trees 4' min. from edge of sidewalk, 4' min. from back of curb.
3. Tree Setbacks: Sewer/Water: 10'; Power and Traffic Poles: 10'; Gas: 8'; Electric: 3'–5'; Fire Hydrants: 3'–5'.
4. Landscape grading must be approved prior to installation of irrigation and hardscape elements and plant materials.
5. Refer to Hardscape Plans for basin locations.
6. All plant locations shall be approved by TDOT Landscape Architect prior to planting.
7. All plant locations to be coordinated with Electrical regarding cabinet and pull boxes locations.

LANDSCAPE SHEET

WHEAT DESIGN GROUP
LANDSCAPE ARCHITECTS

Call at least two full working days before you begin excavation.
ARIZONA 811
Arizona Blue Stake, Inc.
Dial 8-1-1 or 1-800-STAKE-IT (782-5348)
In Maricopa County: (602) 263-1100

PSOMAS
333 E. Wetmore Road, Suite 450
Tucson, AZ 85705
(520) 292–2300 (520) 292–1290 fax
www.psomas.com

NO.	DATE	REVISION	BY	CHKD.	APPR.

90% PRELIMINARY NOT FOR CONSTRUCTION

DEPARTMENT OF TRANSPORTATION/ENGINEERING DIVISION
PIMA PEDESTRIAN PATH
ALVERNON WAY TO COLUMBUS BOULEVARD

CITY OF TUCSON

DRWN. BY CM, IO
DSGN. BY CM
CHKD. BY LM 04/15

REF. SCALE:
PLAN NO. U–2014–021

L06 OF L06

22 OF 22

M:\COT Pima Ped Path-14803-Data\Sheet Files\COT-PimaPed-L06.dwg Layout1 Chelsea Marshall Thu, 16 Apr 2015, 11:49am Last Saved By: Cmarshall