TRAFFIC SIGNAL AND ROADWAY LIGHTING STANDARD DETAILS

DETAIL NO.	TITLE
T 101	NO. 3 1/2 PULL BOX
T 102	NO. 5 PULL BOX
T 103	NO. 5 PULL BOX EXTENSION
T 104	NO. 7 PULL BOX
T 105	NO. 7 PULL BOX EXTENSION
T 106	PULL BOX INSTALLATION
T 107	STREET POLE WIRING DIAGRAM
T 203	FOUNDATION FOR TYPE IV, V CONTROL CABNETS
T 308	TYPE I PEDESTAL CABINET AND FOUNDATION
T 309	TYPE I CONTROL CABINET
T 310	TYPE III CONTROL CABINET
T 312	TYPE IV CONTROL CABINET
T 313	TYPE V CONTROL CABINET
T 324	LIGHTING DESIGN CRITERIA
T 325	TYPE 1 SRETT LIGHTING CABINET
T 327	OPTIONAL TEE VENT
T 400	NOTES AND PLAN SYMBOLS
T 401	TYPE "A" POLE
T 405	TYPE "E" POLE AND MAST ARM
T 406	TYPE "F" POLE AND MAST ARM
T 407	TYPE "G" POLE AND MAST ARM
T 410	TYPE "J" POLE AND MAST ARM
T 411	TYPE "K" POLE AND MAST ARM
T 412	TYPE "Q" POLE AND MAST ARM
T 413	TYPE "R" POLE AND MAST ARM
T 417	POLE HAND HOLE DETAIL
T 418	POLE DRILLING DETAIL
T 419	PEDESTRIAN PUSH BUTTON POST TYPE I
T 420	PEDESTRIAN PUSH BUTTON POST TYPE II
T 421	STRAIN POLE AND MAST ARM
T 430	WOOD POLE MAST ARM
T 432	SPREAD FOUNDATION (TYPE Q AND J POLES)
T 433	SPREAD FOUNDATION (TYPE E, F, G, 1, AND 2 POLES
T 444	TYPE I STREET LIGHTING POLE
T 445	TYPE 2 STREET LIGHT POLE
T 446	STREET LIGHT POLE TYPE D AND E
T 710	6' x 6' (1.830 m X 1.830 m) LOOP DETECTOR
T 711	BICYCLE LANE LOOP DETECTOR
T 712	PRESENCE LOOP DETECTOR
T 713	UNDERGROUND CONDUIT
T 714	6X6 PRESENCE LOOP DETECTOR
T 800	CITY TUCSON AND PIMA COUNTY STANDARD PHASING DETAIL
T 801	SIGNAL FACES WITH BACKPLATES
T 802	VISORS 8" (205 mm) AND 12" (305 mm) SIGNALS
T 803	TYPICAL SIGNAL HEAD
T 804	MAN/HAND STYLE PEDESTRIAN SIGNAL

TRAFFIC SIGNAL AND ROADWAY LIGHTING STANDARD DETAILS

T 901	TYPE I AND II MOUNTING ASSEMBLY
T 902	TYPE III AND IV MOUNTING ASSEMBLY
T 903	TYPE V MOUNTING ASSEMBLY
T 904	TYPE VI MOUNTING ASSEMBLY
T 905	TYPE VII MOUNTING ASSEMBLY
T 906	TYPE VIII MOUNTING ASSEMBLY
T 907	TYPE IX MOUNTING ASSEMBLY
T 908	TYPE X MOUNTING ASSEMBLY
T 909	TYPE XI MOUNTING ASSEMBLY
T 910	SPAN WIRE MOUNTING TERMINAL HANGER
T 911	2-WAY SPAN WIRE MOUNTING ASSEMBLY
T 912	3-WAY SPAN WIRE MOUNTING ASSEMBLY
T 913	4-WAY SPAN WIRE MOUNTING ASSEMBLY
T 1001	MISCELLANEOUS SIGNAL PARTS
T 1002	MAST ARM PLUMBIZERS
T 1003	POLE PLATE DETAIL
T 1004	TERMINAL COMPARTMENT SIDE MOUNT AND POLE TOP MOUNT
T 1101	TYPE I PEDESTRIAN PUSH BUTTON DETAIL
T 1103	PLACARDS FOR PEDESTRIAN PUSH BUTTONS
T 1104	SIGNS FOR INTERNATIONAL SYMBOL PUSH BUTTON
T 1105	PEDESTRIAN PUSH BUTTON MEDIAN CROSSWALK LOCATION
T 1505	PHOTOELECTRIC CELL MOUNTING
T 1603	GUARD POST
T 1701	UNMETERED SERVICE STREET LIGHT ASSEMBLY
T 1702	MID-SPAN JUMPER POLE
T 1801	METERED SERVICE PEDESTAL
T 1803	UNMETERED SERVICE PEDESTAL
T 1901	PRE-EMPT SENSOR WIRING
T 1902	PRE-EMPT SENSOR ASSEMBLY
T 1903	PRE-EMPT STROBE ASSEMBLY
T 1904	ILLUMINATED STREET SIGN (I.S.S.) INSTALLATION
T 1905	VIDEO DETECTION SYSTEM AUTO SCOPE INSTALLATION
T 2001	TELEPHONE DROP
T 2101	SPAN WIRE TRAFFIC SIGNAL INSTALLATION

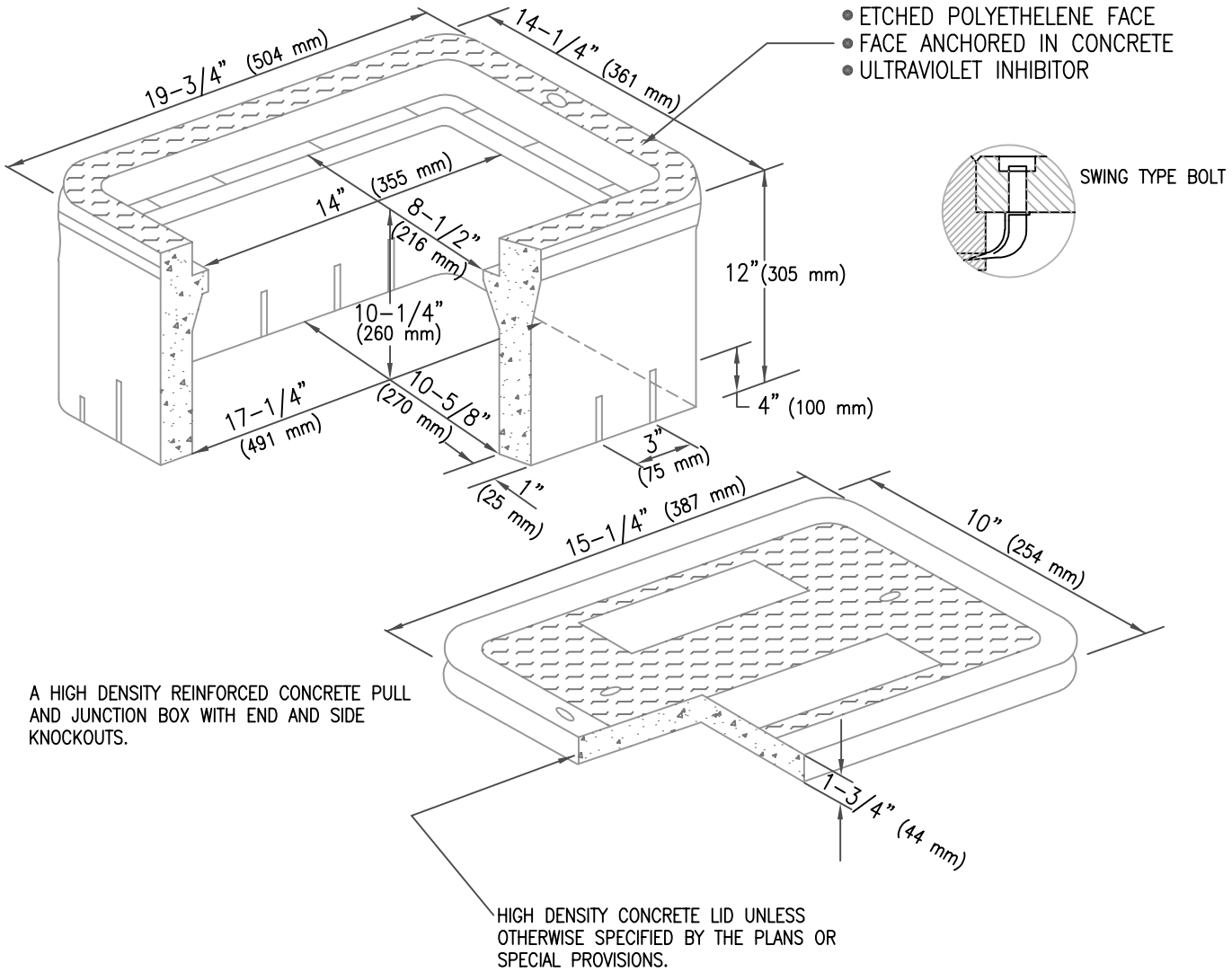

NOTES:

1. SEE SPECIFICATIONS FOR MATERIAL AND CONSTRUCTION.
2. COVERS SHALL BE SECURED WITH 3/8" (9.5 mm) "L" BOLTS, NUTS, AND WASHERS, WHICH SHALL BE OF BRASS, STAINLESS STEEL, OR OTHER CORROSION RESISTANT MATERIAL. STAINLESS STEEL SHALL HAVE A CHROMIUM CONTENT OF NOT LESS THAN 18% AND A NICKEL CONTENT OF NOT LESS THAN 8%. NUTS SHALL BE RECESSED BELOW TOP SURFACE OF COVER.
3. COVER LETTERING SHALL BE 1" (25 mm) LETTERS CAST IN STANDARD MARKINGS, "TRAFFIC SIGNAL" OR STREET LIGHTING".
4. THE TOP OF THE COVERS SHALL SIT FLUSH WITH THE TOP EDGE OF THE PULL BOX.
5. SEE T 106 FOR TYPICAL INSTALLATION DETAILS.
6. STEEL PULL BOX COVERS SHALL BE USED WHEN SPECIFIED.

ISSUED:		STANDARD DETAIL		DETAIL NO.
8/92	CITY OF TUCSON FOUNDED 1775	NO. 3-1/2 PULL BOX	THE SEAL of PIMA COUNTY ARIZONA	T 101
REVISED: 10/02				SHEET 1 OF 1

TS1-1.DWG 12/07/00 10:11

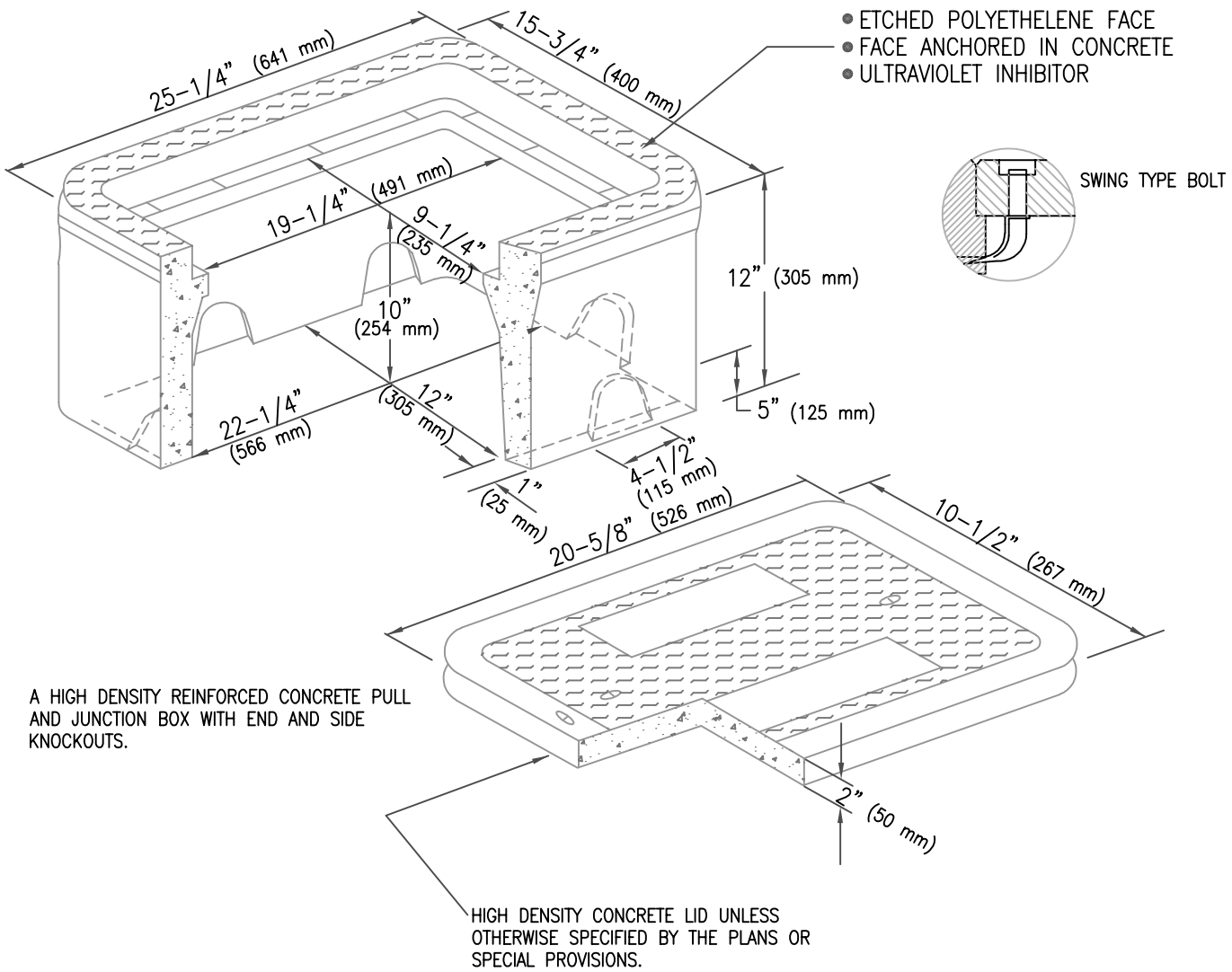

NOTES:

1. SEE SPECIFICATIONS FOR MATERIAL AND CONSTRUCTION.
2. COVERS SHALL BE SECURED WITH 3/8" (9.5 mm) "L" BOLTS, NUTS, AND WASHERS, WHICH SHALL BE OF BRASS, STAINLESS STEEL, OR OTHER CORROSION RESISTANT MATERIAL. STAINLESS STEEL SHALL HAVE A CHROMIUM CONTENT OF NOT LESS THAN 18% AND A NICKEL CONTENT OF NOT LESS THAN 8%. NUTS SHALL BE RECESSED BELOW TOP SURFACE OF COVER.
3. COVER LETTERING SHALL BE 1" (25 mm) LETTERS CAST IN STANDARD MARKINGS, "TRAFFIC SIGNAL" OR STREET LIGHTING".
4. THE TOP OF THE COVER SHALL SIT FLUSH WITH THE TOP EDGE OF THE PULL BOX.
5. SEE T 104 FOR LIFT EYE SLOT DETAILS.
6. SEE T 106 FOR TYPICAL INSTALLATION DETAILS.
7. STEEL PULL BOX COVERS SHALL BE USED WHEN SPECIFIED.

ISSUED:		STANDARD DETAIL		DETAIL NO.
8/92	CITY OF TUCSON FOUNDED 1775	NO. 5 PULL BOX	THE SEAL of PIMA COUNTY ARIZONA	T 102
REVISED: 10/02				SHEET 1 OF 1

TS1-2.DWG 12/07/00 10:16

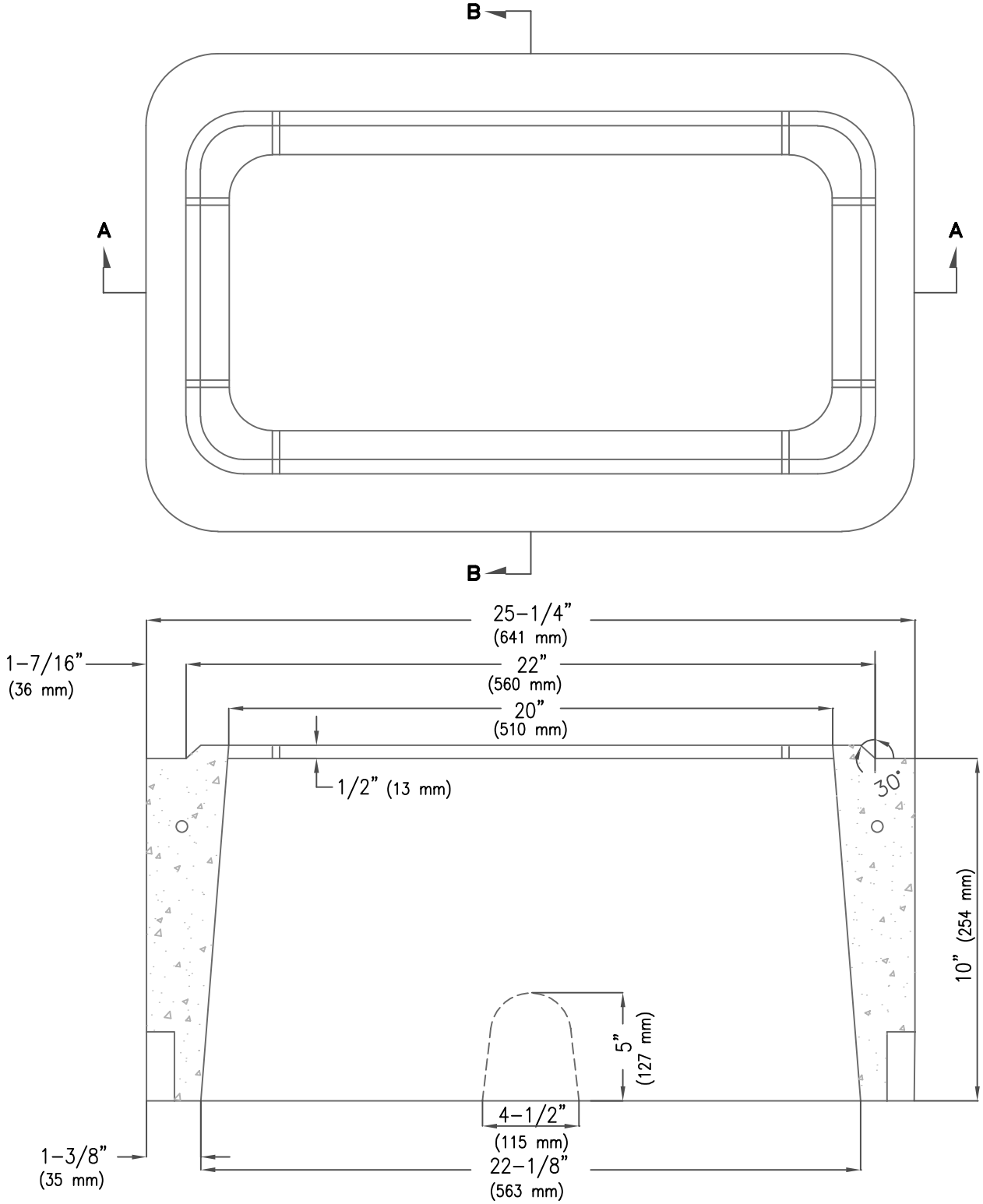

SECTION A-A

NOTE: USE STEEL PULL BOX COVERS WHEN SPECIFIED BY THE PLANS OR SPECIAL PROVISIONS.

ISSUED:		STANDARD DETAIL		DETAIL NO.
8/92		NO. 5 PULL BOX EXTENSION		T 103
REVISED:				
10/02				SHEET 1 OF 2

TS1-3-1.DWG 12/07/00 10:17

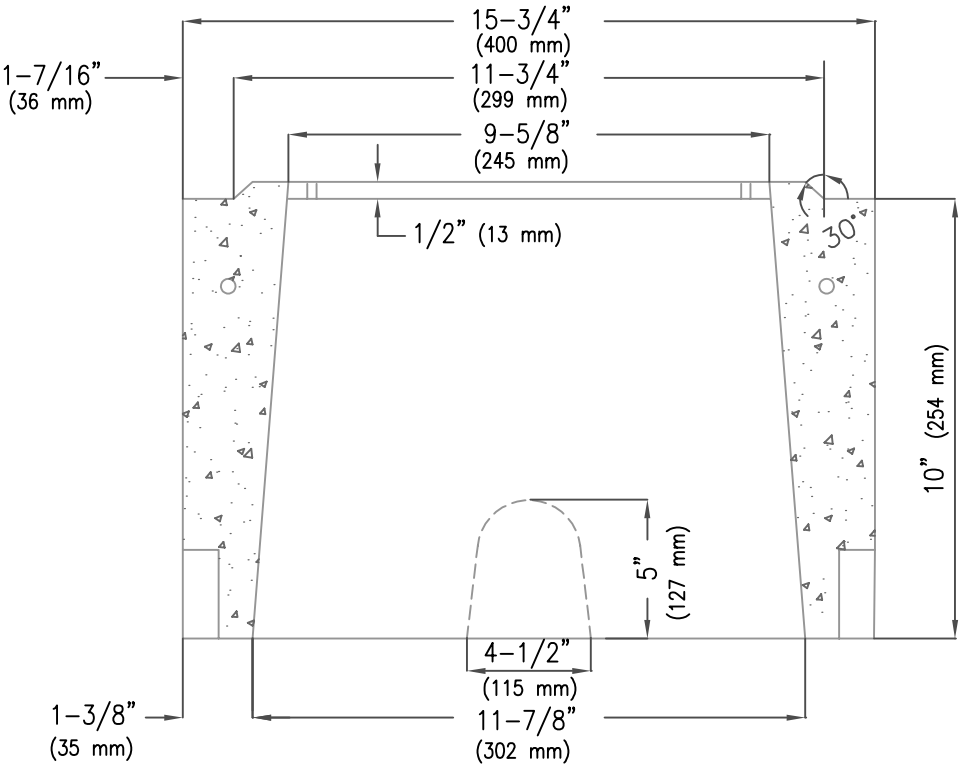

SECTION B-B

NOTES:

1. SEE SPECIFICATIONS FOR MATERIAL AND CONSTRUCTION.
2. TOP LOCKING BEAD MAY BE EITHER CONTINUOUS, LOCATED AT SIDES ONLY, OR LOCATED AT CORNERS ONLY.

NOTE: USE STEEL PULL BOX COVERS WHEN SPECIFIED BY THE PLANS OR SPECIAL PROVISIONS.

ISSUED:		STANDARD DETAIL		DETAIL NO.
8/92		NO. 5 PULL BOX EXTENSION		T 103
REVISED:				
10/02				SHEET 2 OF 2

TS1-3-2.DWG 12/07/00 10:17

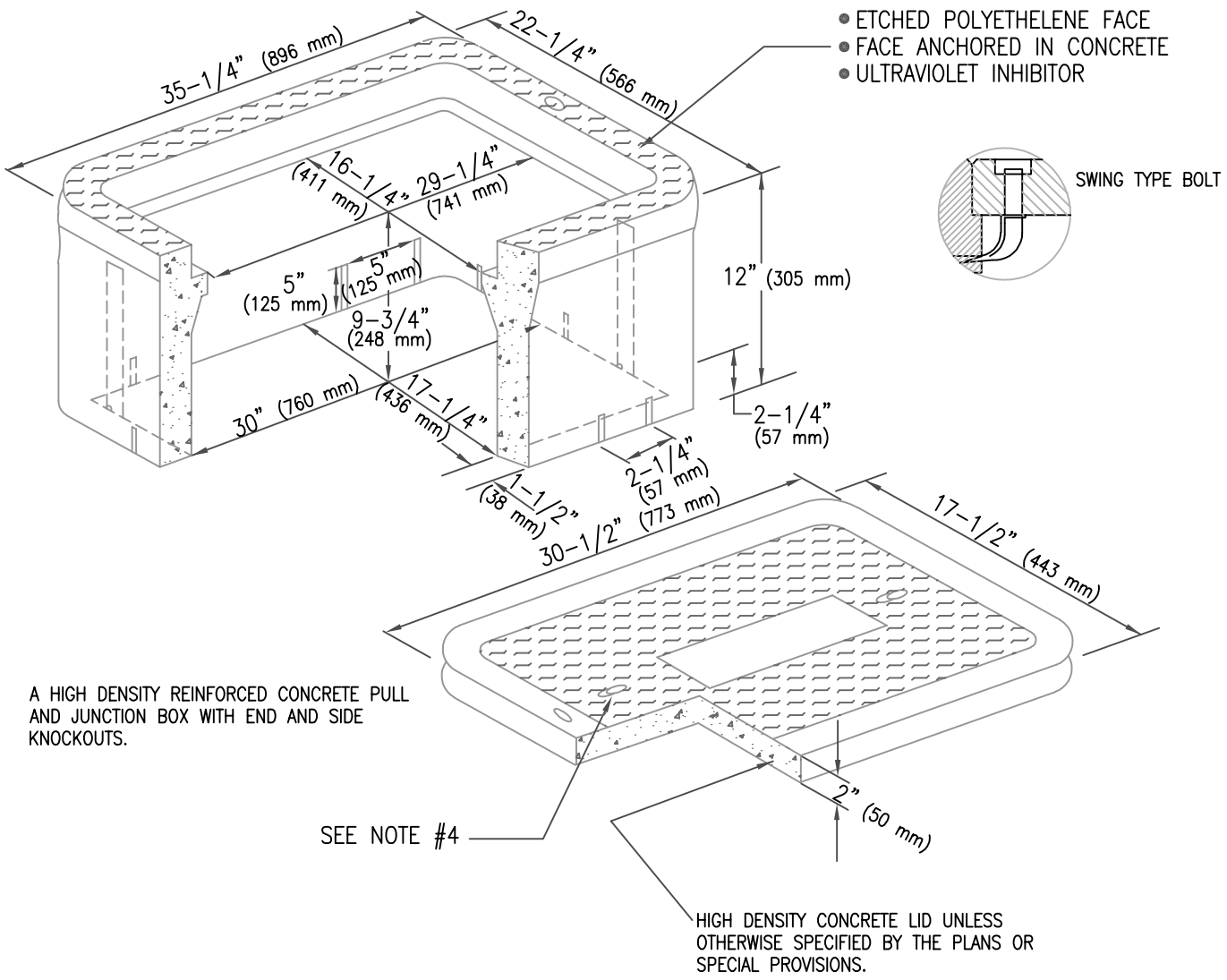

NOTES:

1. SEE SPECIFICATIONS FOR MATERIAL AND CONSTRUCTION.

2. COVERS SHALL BE SECURED WITH 3/8" (9.5 mm) "L" BOLTS, NUTS, AND WASHERS, WHICH SHALL BE OF BRASS, STAINLESS STEEL, OR OTHER CORROSION RESISTANT MATERIAL. STAINLESS STEEL SHALL HAVE A CHROMIUM CONTENT OF NOT LESS THAN 18% AND A NICKEL CONTENT OF NOT LESS THAN 8%. NUTS SHALL BE RECESSED BELOW TOP SURFACE OF COVER.

3. COVER LETTERING SHALL BE 1" (25 mm) LETTERS CAST IN STANDARD MARKINGS: "TRAFFIC SIGNAL", "STREET LIGHTING", OR "COMMUNICATION".

4. SEE T 104 FOR LIFT EYE SLOT DETAILS.

5. SEE T 106 FOR TYPICAL INSTALLATION DETAILS.

NOTE: USE STEEL PULL BOX COVERS WHEN SPECIFIED BY THE PLANS OR SPECIAL PROVISIONS.

ISSUED:		STANDARD DETAIL		DETAIL NO.
8/92	CITY OF TUCSON FOUNDED 1775	NO. 7 PULL BOX	THE SEAL of PIMA COUNTY ARIZONA	T 104
REVISED: 10/02				SHEET 1 OF 1

TS1-4.DWG 12/07/00 10:19

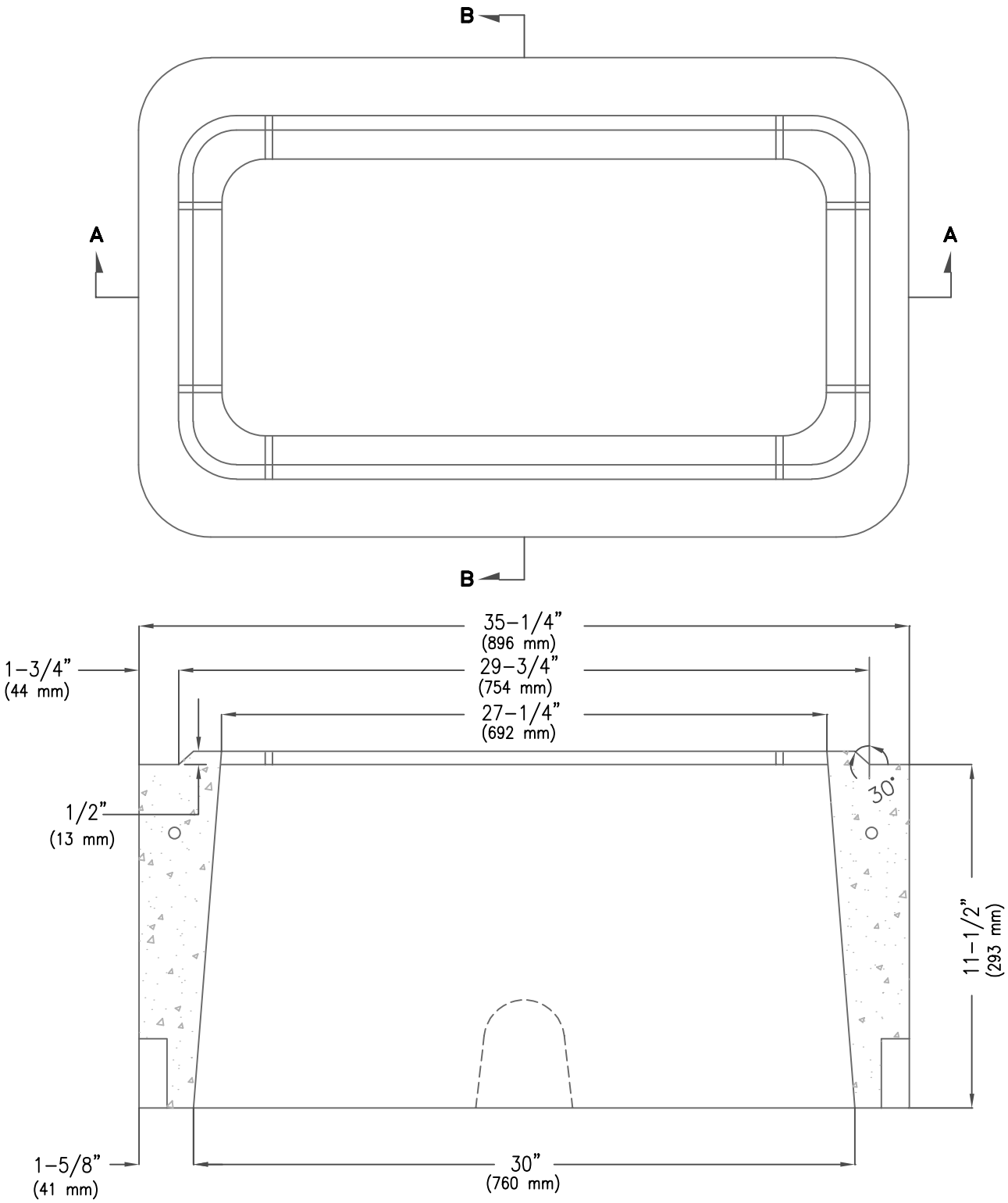

SECTION A-A

NOTE: USE STEEL PULL BOX COVERS WHEN SPECIFIED BY THE PLANS OR SPECIAL PROVISIONS.

ISSUED:		STANDARD DETAIL		DETAIL NO.
8/92		NO. 7 PULL BOX EXTENSION		T 105
REVISED:				
10/02				SHEET 1 OF 2

TS1-5-1.DWG 12/07/00 10:19

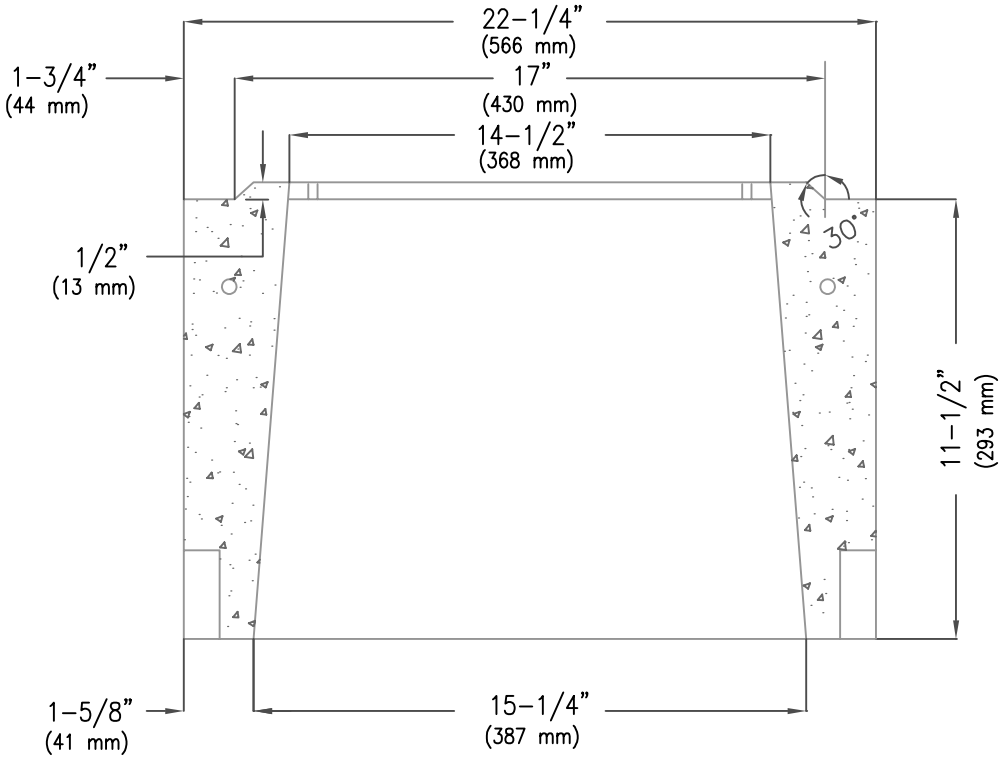

SECTION B-B

NOTES:

1. SEE SPECIFICATIONS FOR MATERIAL AND CONSTRUCTION.
2. TOP LOCKING BEAD MAY BE EITHER CONTINUOUS, LOCATED AT SIDES ONLY, OR LOCATED AT CORNERS ONLY.
3. SEE T 106 FOR TYPICAL INSTALLATION DETAILS.

NOTE: USE STEEL PULL BOX COVERS WHEN SPECIFIED.

ISSUED:		STANDARD DETAIL		DETAIL NO.
8/92		NO. 7 PULL BOX EXTENSION		T 105
REVISED:				
10/02				SHEET 2 OF 2

TS1-5-2.DWG 12/07/00 10:20

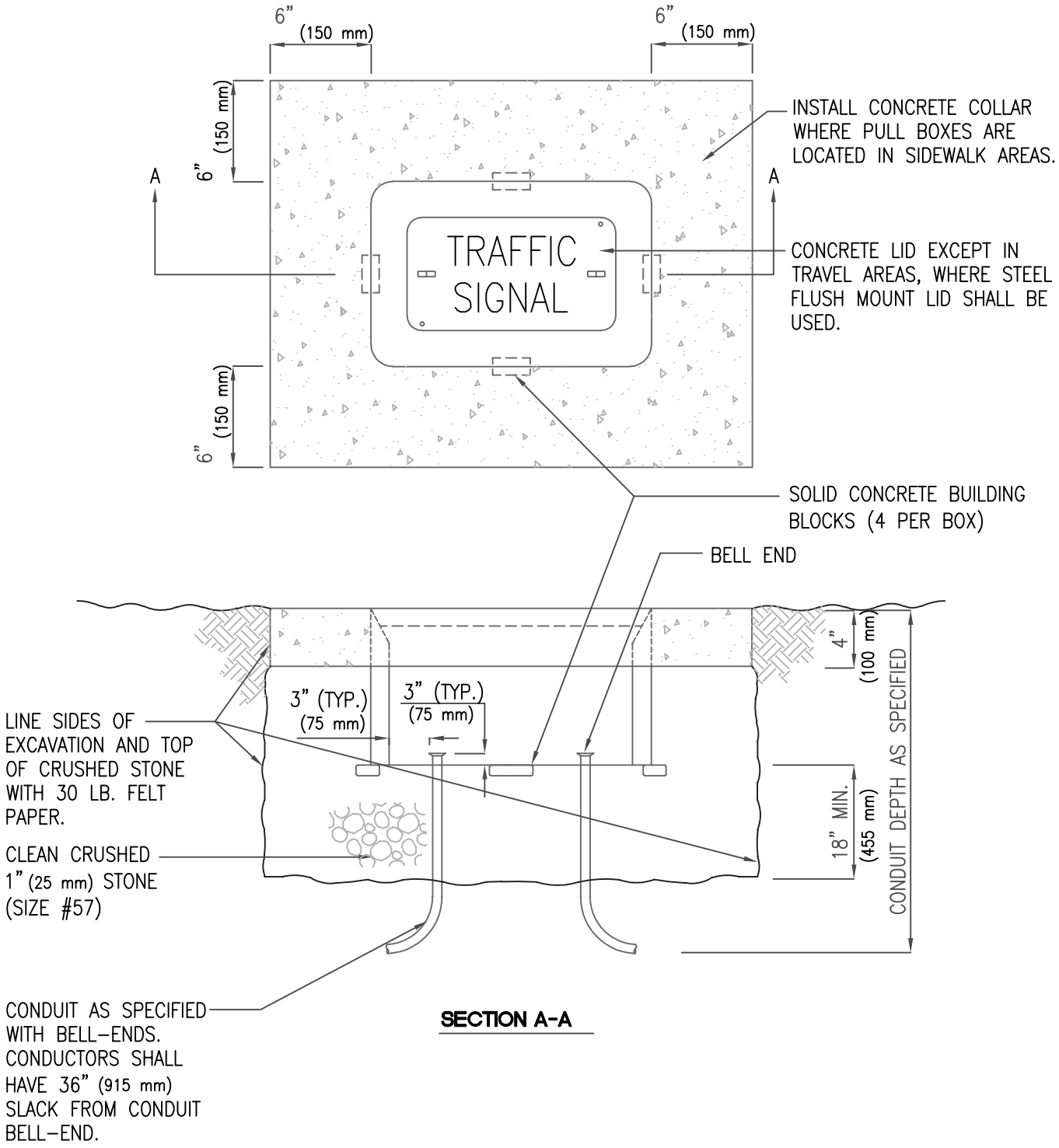

SECTION A-A

ISSUED:		STANDARD DETAIL		DETAIL NO.
8/92	CITY OF TUCSON FOUNDED 1775	PULL BOX INSTALLATION	THE SEAL of PIMA COUNTY ARIZONA	T 106
REVISED: 11/04				SHEET 1 OF 1

TS1-6.DWG 12/07/00 10:21

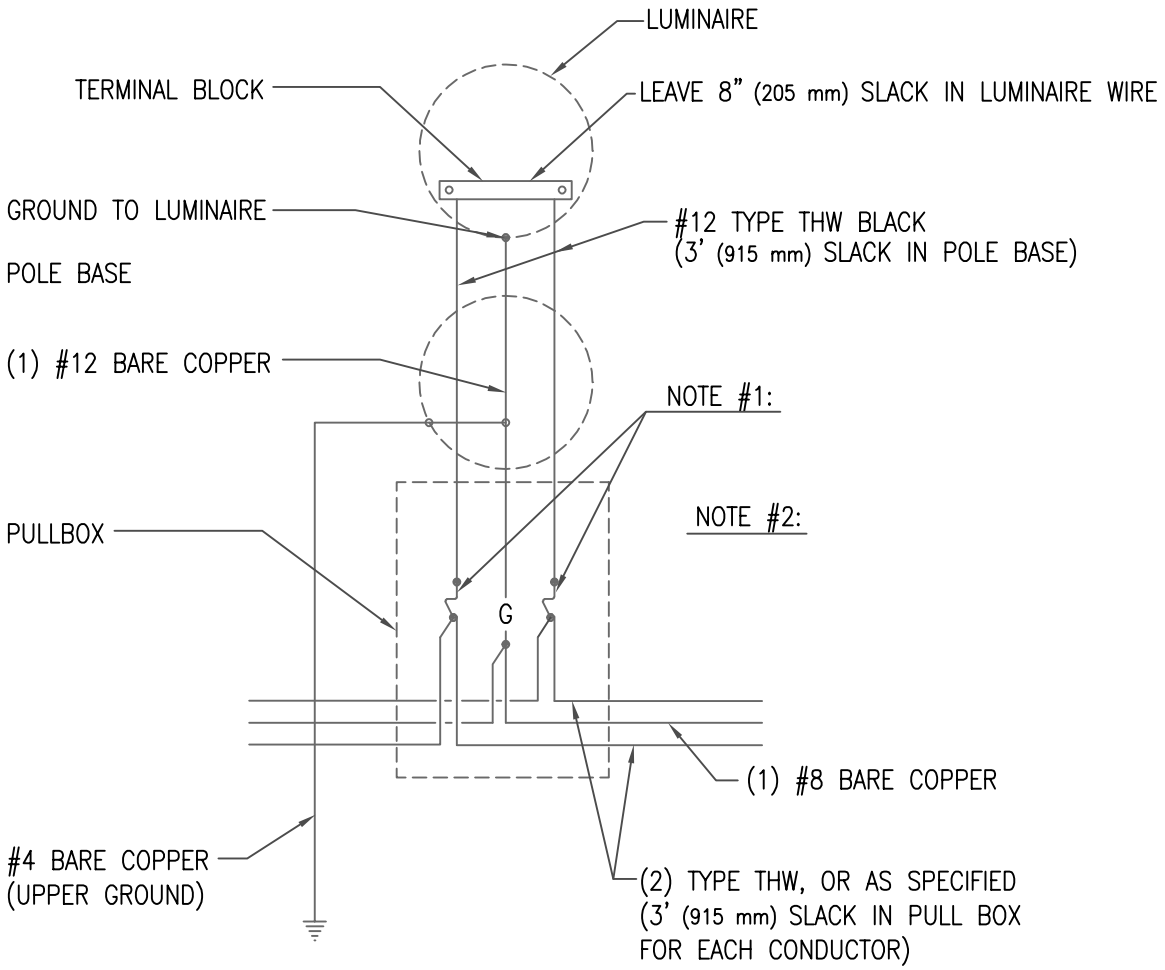

NOTES:

1. (2) SINGLE POLE BUSS IN THE LINE WATERPROOF FUSE HOLDER.

   600 VOLT KTK TYPE FUSE SIZE AS SPECIFIED ON IN-LINE FUSE SIZES TABLE.

2. ONLY ONE FUSE REQUIRED FOR 120 VOLT SYSTEM USE FNM TYPE 250 VOLT FUSES FOR 120/240 VOLT SYSTEMS.

3. FOR 120 VOLT SYSTEMS NEUTRAL SHALL BE WHITE. TAPE COLOR CODING NOT ACCEPTABLE.

4. IN NO CASE THE FUSE SIZE SHALL BE LARGER THAN 20 AMP FOR #12 THW COPPER (NEC ART 310).

5. IN-LINE FUSE CONNECTORS SHALL BE THREADED-LOCKING TYPE AND PROVIDE A WATERTIGHT CONNECTION.

IN-LINE FUSE SIZES

HPS LUMINAIRE WATTAGE	LINE VOLTAGE		
	120	240	480
	AMPERAGE RATING		
100	4	3	1
150	6	3	5
250	10	5	5
400	15	6	5

ISSUED:		STANDARD DETAIL		DETAIL NO.
8/92	CITY OF TUCSON FOUNDED 1775	STREET LIGHT POLE WIRING DIAGRAM	THE SEAL of PIMA COUNTY ARIZONA	T 107
REVISED: 11/04				SHEET 1 OF 1

TS1-7.DWG 12/07/00 10:23

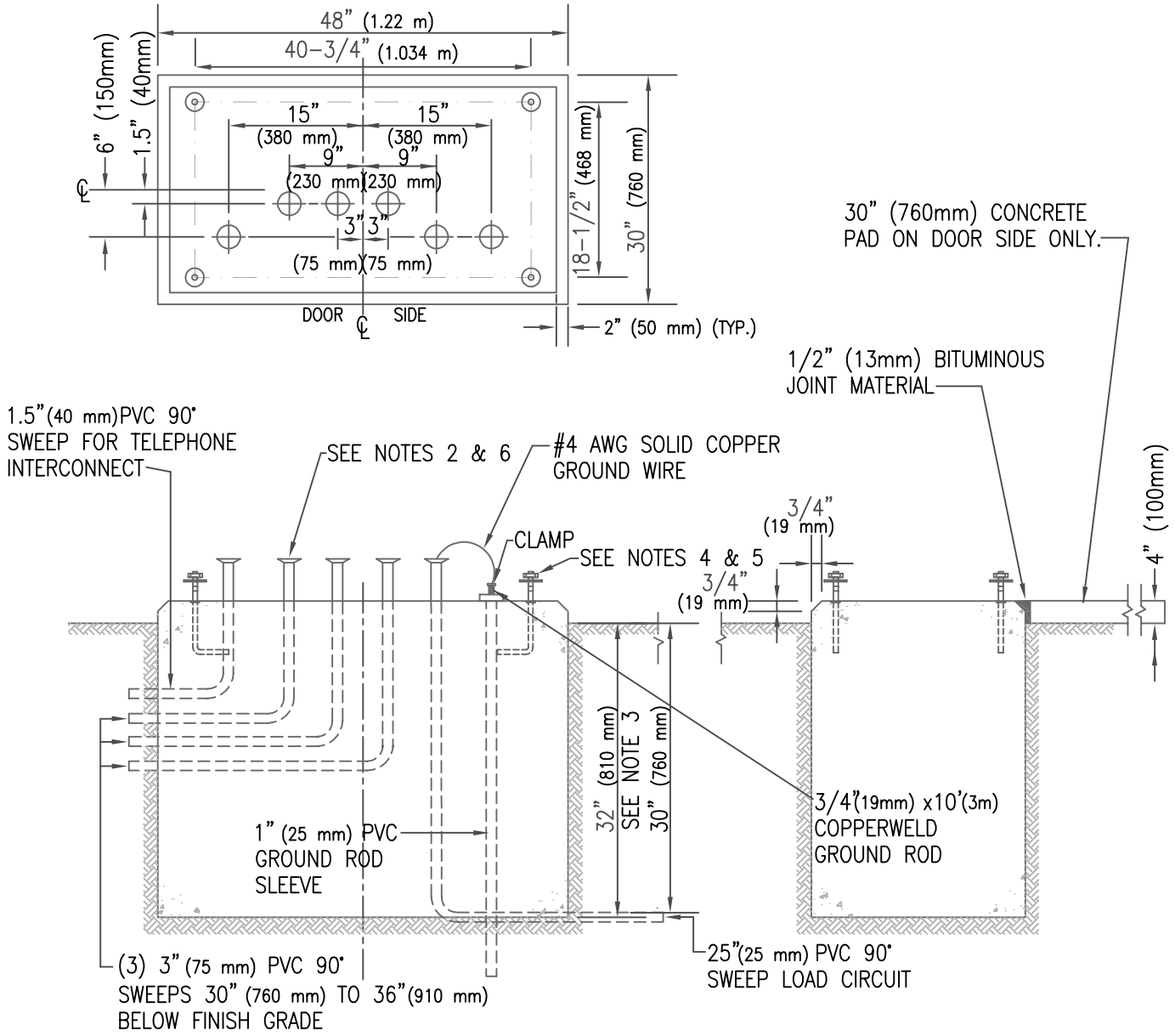

ISSUED:		STANDARD DETAIL		DETAIL NO.
8/92	CITY OF TUCSON FOUNDED 1775	CONTROL CABINET FOUNDATION (TYPE IV, V)	THE SEAL of PIMA COUNTY ARIZONA	T 203
REVISED: 10/02				SHEET 1 OF 2

TS2-3.DWG 12/07/00 10:24

NOTES:

1. ALL MATERIALS AND CONSTRUCTION SHALL CONFORM TO THE REQUIREMENTS OF THE SPECIFICATIONS.
2. SEE PLANS FOR CONDUIT SIZE AND QUANTITY.
3. DEPTH DIMENSION SHOWN IS MINIMUM IN FIRM, UNDISTURBED SOIL. UNSTABLE SOIL CONDITIONS MAY REQUIRE DEEPER FOUNDATIONS.
4. ANCHOR BOLTS SHALL BE GALVANIZED STEEL, 3/4" X 18" X 3" (19 mm X 457 mm X 76 mm), COMPLETE WITH NUTS AND WASHERS.
5. ANCHOR BOLTS SHALL PROJECT A MINIMUM OF 3-1/2" (89 mm) AND A MAXIMUM OF 4-1/2" (115 mm) ABOVE FOUNDATION.
6. CONDUIT SHALL PROJECT A MINIMUM OF 2" (51 mm) AND A MAXIMUM OF 4" (102 mm) ABOVE THE FOUNDATION, EXCEPT FOR CONDUIT FOR GROUND ROD, WHICH SHALL BE FLUSH WITH SURFACE.
7. SEAL GAP BETWEEN CABINET AND FOUNDATION WITH CAULKING COMPOUND
8. ALL CABINET FOUNDATIONS SHALL HAVE A 3/4" X 10' (19 mm X 3.05 m) BONDED COPPER GROUND ROD.
9. DOOR TO FACE AWAY FROM STREET (WHERE POSSIBLE).
10. CONCRETE SLAB SHALL BE PROVIDED.

ISSUED:		STANDARD DETAIL		DETAIL NO.
8/92		CONTROL CABINET FOUNDATION (TYPE IV, V)		T 203
REVISED:				
11/04				SHEET 2 OF 2

TS2-3.DWG 12/07/00 10:24

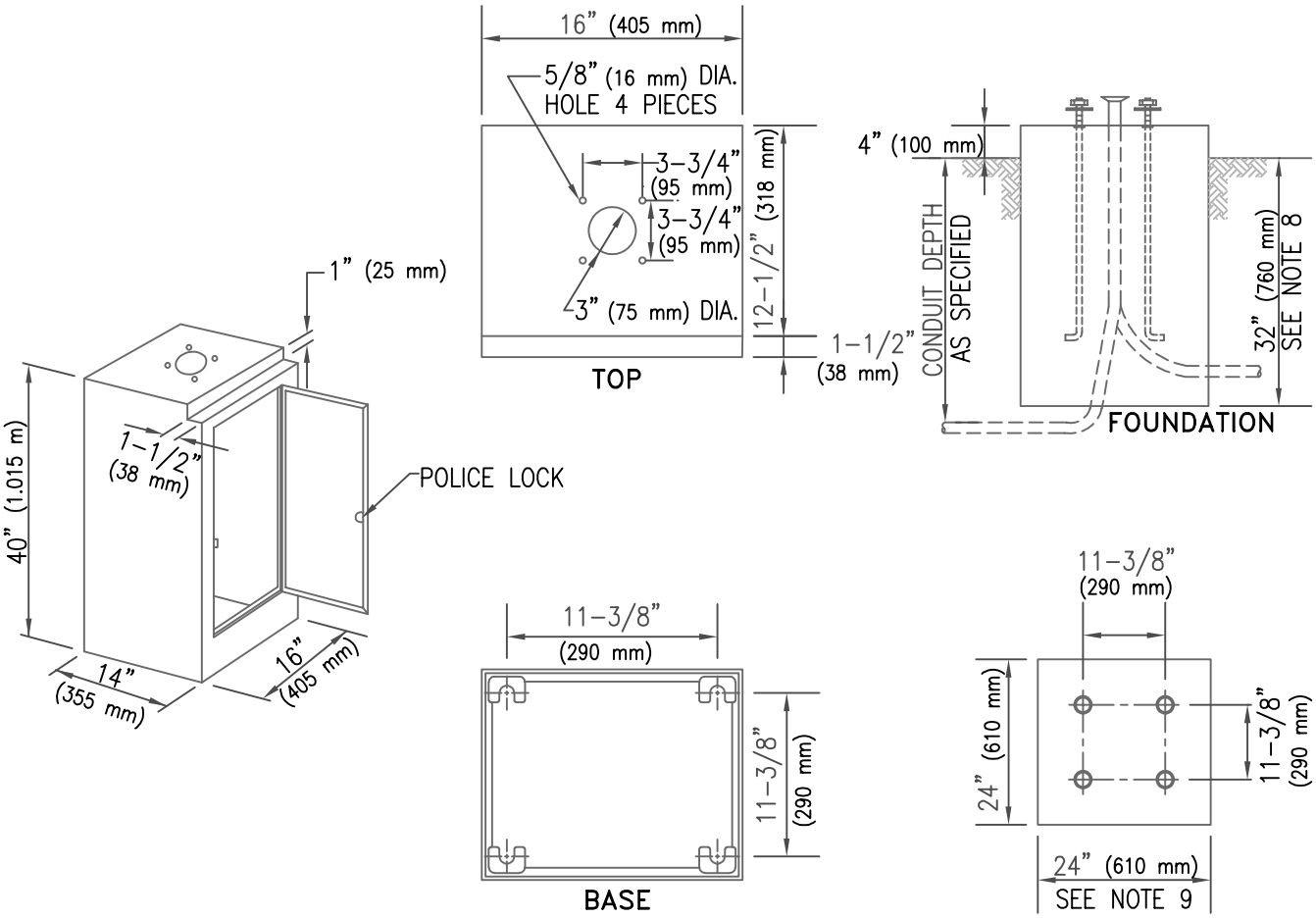

NOTES:

1. SEE SPECIFICATIONS FOR CONSTRUCTION REQUIREMENTS
2. FOR CABINET LOCK DETAILS, SEE T 310.
3. THE MATERIALS SHALL BE CAST ALUMINUM OF 10 GAUGE STEEL.
4. THE DOOR SHALL BE RAIN TIGHT AND DUST PROOF.
5. ANCHOR BOLTS SHALL BE 3/4" X 18" X 3" (19 mm X 455 mm X 75 mm) GALVANIZED STEEL, WITH 2 NUTS, 2 WASHERS, AND SHALL BE FURNISHED WITH CABINET.
6. ANCHOR BOLT PROJECTION ABOVE FOUNDATION SHALL BE 1-3/4" (44 mm) MINIMUM AND 2-1/4" (57 mm) MAXIMUM.
7. CONDUIT PROJECTION ABOVE FOUNDATION SHALL BE 2" (50 mm) MINIMUM AND 4" (100 mm) MAXIMUM. SEE THE PLANS FOR SIZE OF CONDUIT.
8. ADDITIONAL FOUNDATION DEPTH MAY BE NECESSARY TO COMPLY WITH SOIL CONDITIONS.
9. ALTERNATE FOUNDATIONS MAY BE ROUND AND SHALL BE 30" (760 mm) IN DIAMETER.
10. GROUND ROD SHALL BE 3/4" X 10" (19 mm X 3.05 m) BONDED COPPER.
11. DOOR TO FACE AWAY FROM INTERSECTION (WHERE POSSIBLE).
12. SEAL GAP BETWEEN CABINET AND FOUNDATION WITH CAULKING COMPOUND.

ISSUED:		STANDARD DETAIL		DETAIL NO.
8/92	CITY OF TUCSON FOUNDED 1775	TYPE I PEDESTAL CABINET AND FOUNDATION	THE SEAL of PIMA COUNTY ARIZONA	T 308
REVISED: 10/02				SHEET 1 OF 1

TS3-8.DWG 12/07/00 10:25

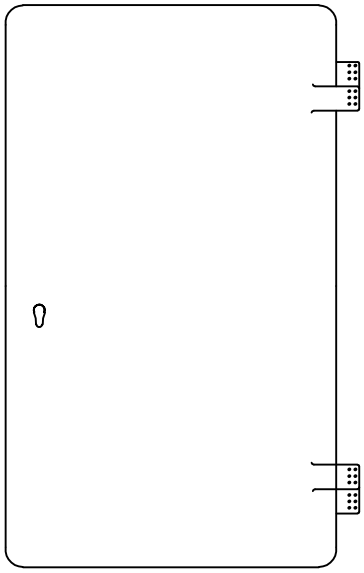

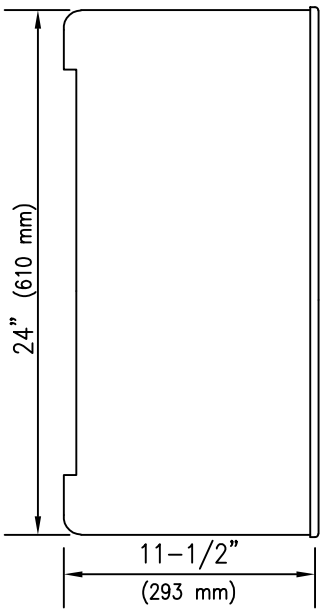

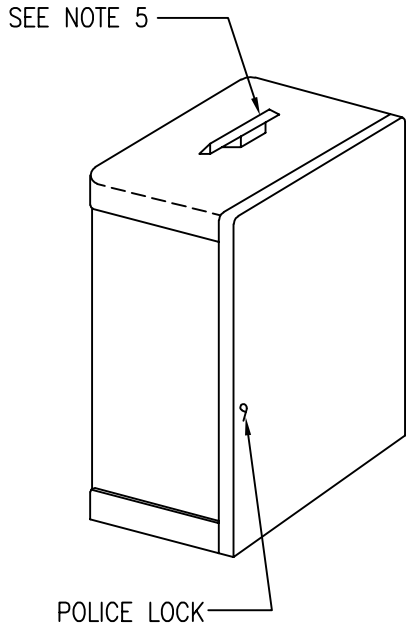

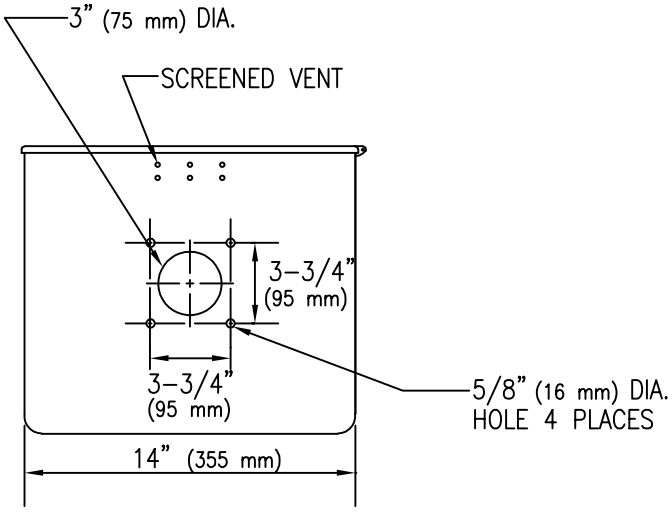

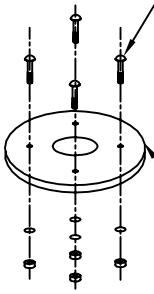

NOTES:

1. FOR CABINET LOCK DETAILS, SEE T 310.
2. MATERIAL; CAST ALUMINUM OR 14 GA. STEEL.
3. THE DOOR SHALL BE RAIN TIGHT AND DUST PROOF.
4. LOCATION OF BASE MOUNTING HOLES SHALL CORRESPOND WITH TYPE 1 PEDESTAL CABINET, SEE T 308.
5. OPTIONAL TEE VENT OR CABINET FAN.
6. FOR CONSTRUCTION REQUIREMENTS REFER TO STD. SPECS.
7. FOR PAINTING REFER TO STD. SPECS.

ISSUED:		STANDARD DETAIL		DETAIL NO.
8/92		TYPE I CONTROL CABINET		T 309
REVISED:				
10/02				SHEET 1 OF 2

TS3-9-1.DWG 12/07/00 10:25

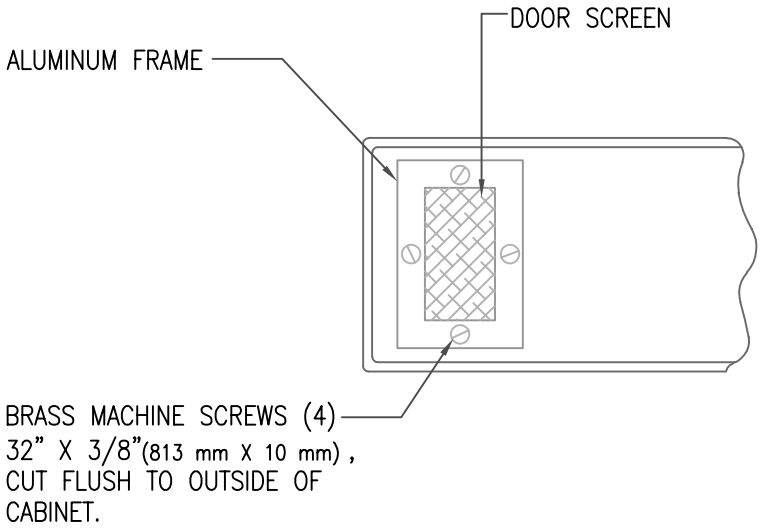

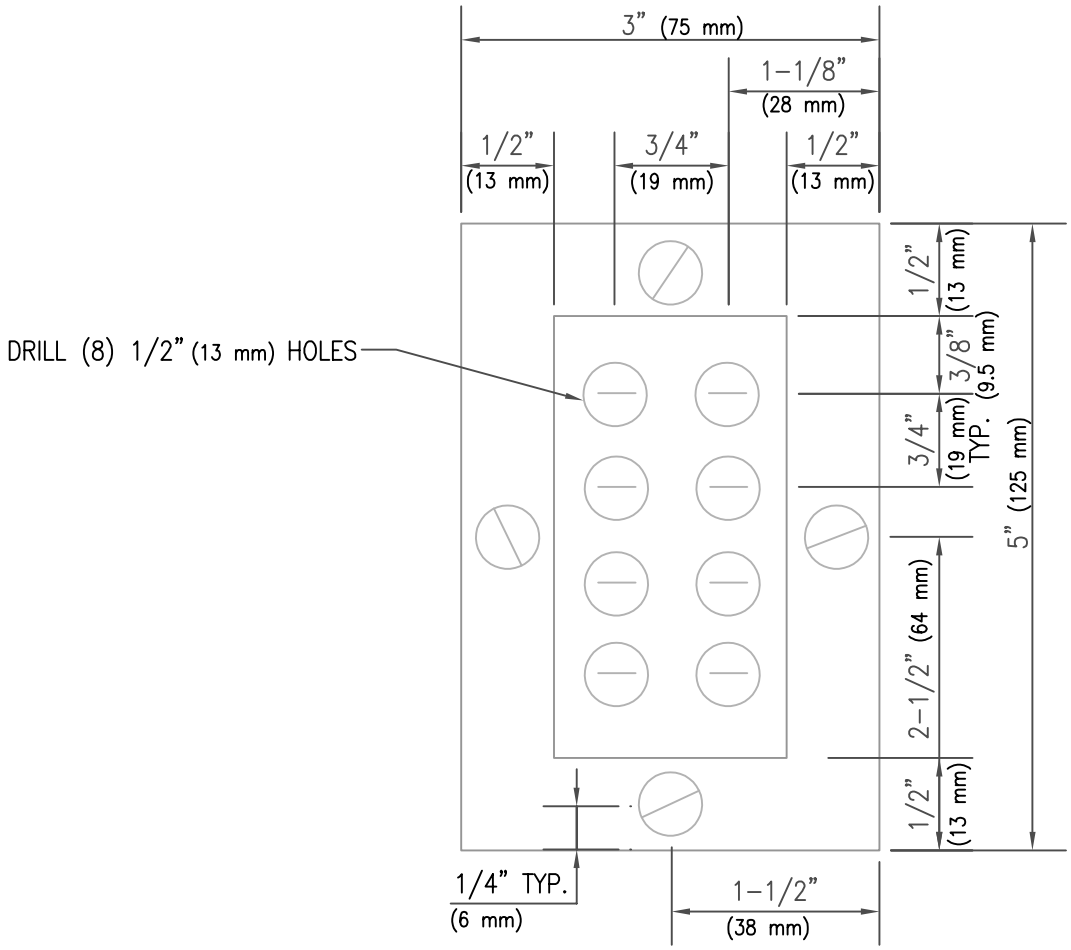

VENT DETAILS

ISSUED:		STANDARD DETAIL		DETAIL NO.
8/92		TYPE I CONTROL CABINET		T 309
REVISED:				
10/02				SHEET 2 OF 2

TS3-9-2.DWG 12/07/00 10:26

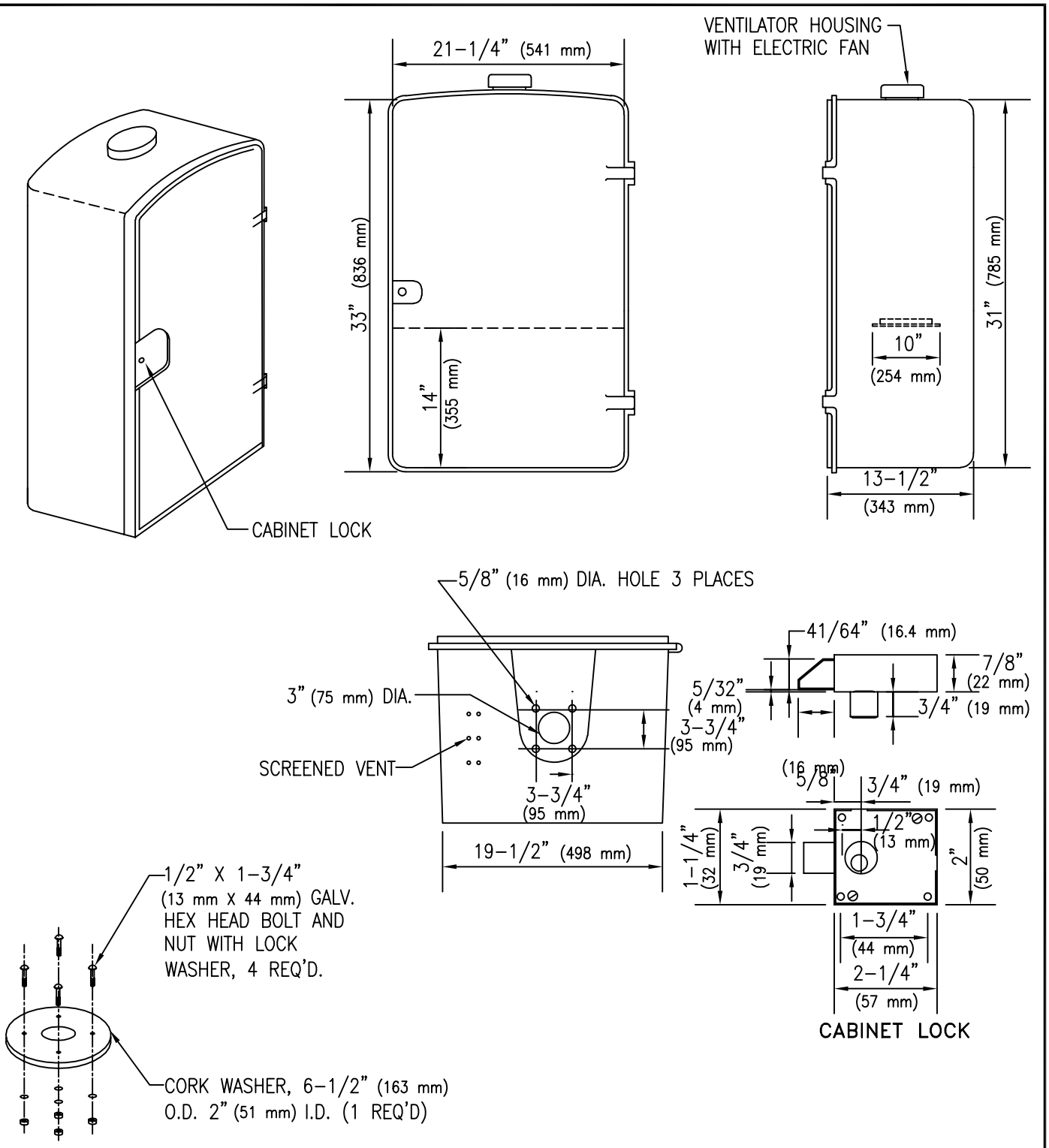

NOTES:

1. MATERIAL; CAST ALUMINUM OR 14 GA. STEEL.
2. DOORS SHALL BE RAIN TIGHT AND DUST PROOF.
3. LOCATION OF BASE MOUNTING HOLES SHALL CORRESPOND WITH SQUARE BASE PEDESTAL CABINET. SEE T 308.
4. FOR CONSTRUCTION REQUIREMENTS REFER TO STD. SPECS.
5. SEE T 309 FOR DETAILS OF SCREENED VENT.

ISSUED:		STANDARD DETAIL		DETAIL NO.
8/92	CITY OF TUCSON	TYPE III CONTROL CABINET	THE SEAL of PIMA COUNTY ARIZONA	T 310
REVISED:				
10/02				SHEET 1 OF 1

TS3-10.DWG 12/07/00 10:27

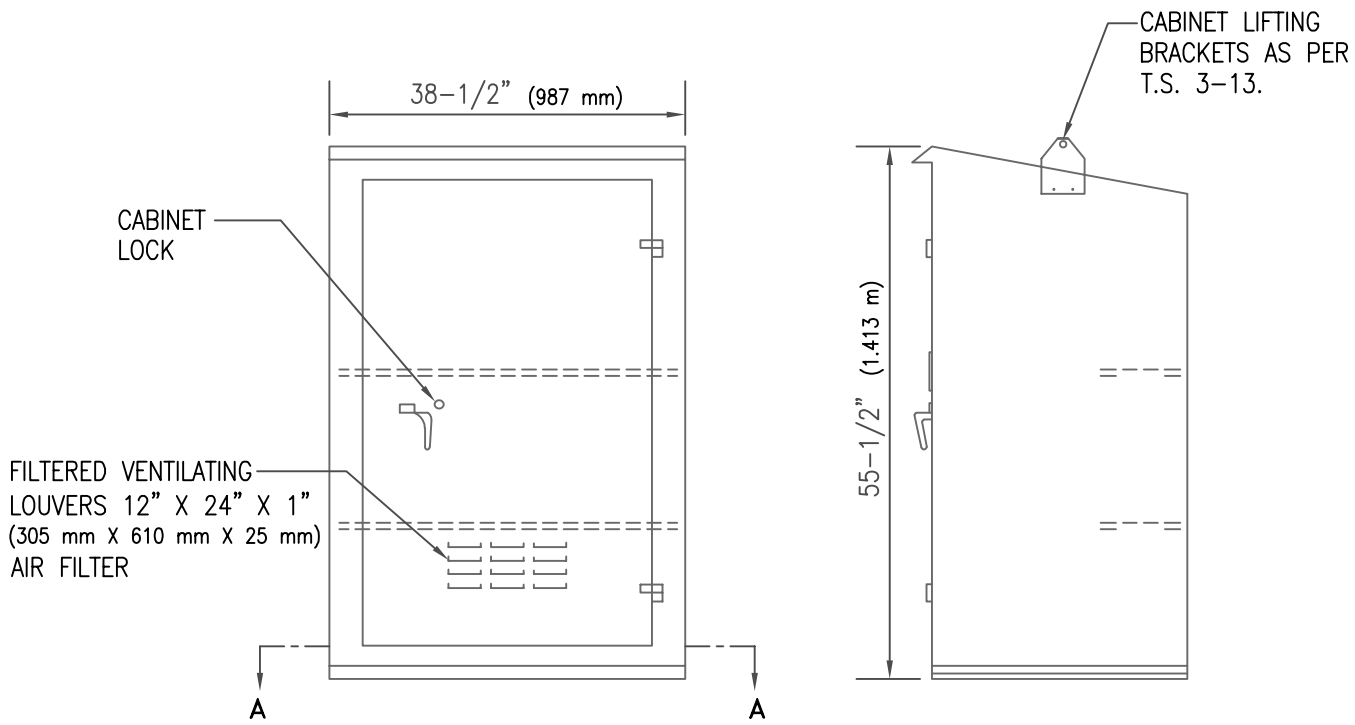

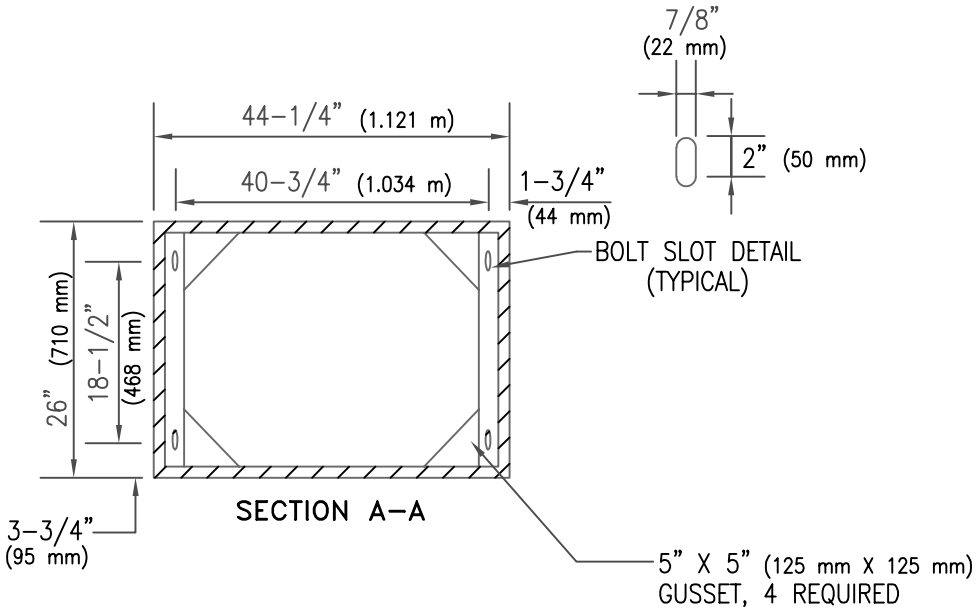

NOTES:

1. FOR CABINET LOCK DETAILS, SEE T 310
2. MATERIAL; 14 GA. STEEL.
3. ALL DOORS SHALL BE RAIN TIGHT AND DUST PROOF.
4. FOR SIZE AND LOCATION OF ANCHOR BOLTS, SEE FOUNDATION DETAIL T 203.
5. SHELVES SHALL BE REMOVABLE AND ADJUSTABLE FOR VERTICAL SPACING. SHELVES SHALL BE FABRICATED FROM SHEET METAL.
6. FOR CONSTRUCTION REQUIREMENTS, SEE SPECIFICATIONS.

ISSUED:		STANDARD DETAIL		DETAIL NO.
8/92	CITY OF TUCSON FOUNDED 1775	TYPE IV CONTROL CABINET	THE SEAL of PIMA COUNTY ARIZONA	T 312
REVISED: 10/02				SHEET 1 OF 2

TS3-12-1.DWG 12/07/00 10:29

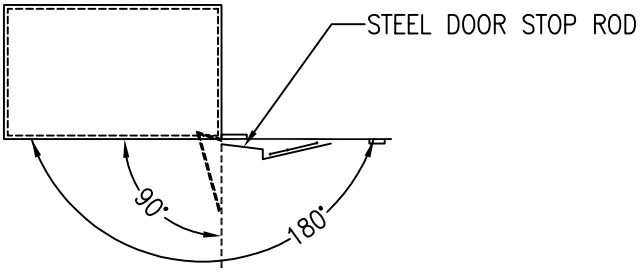

PLAN VIEW SHOWING
2 POSITION DOOR STOP

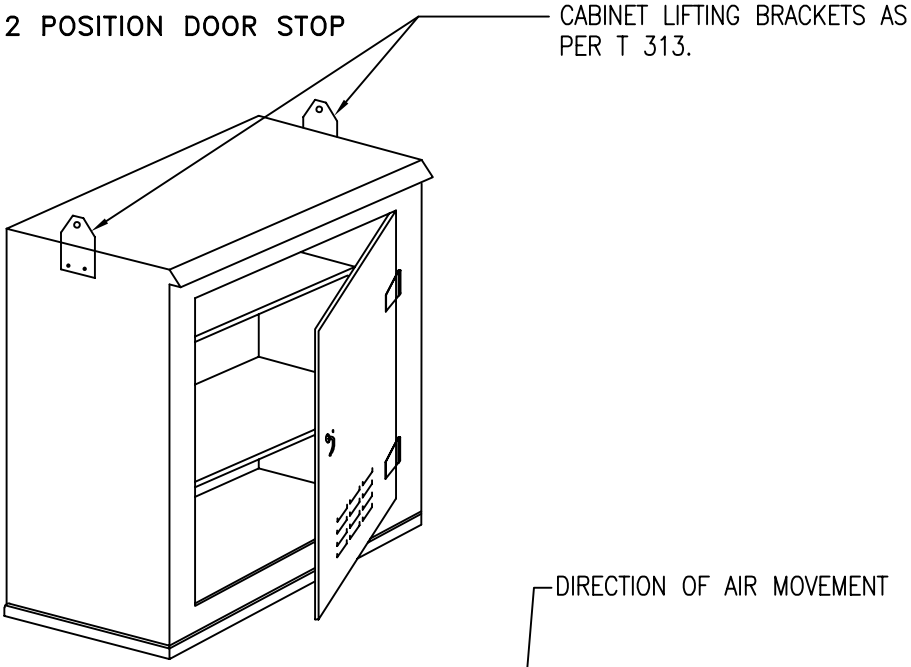

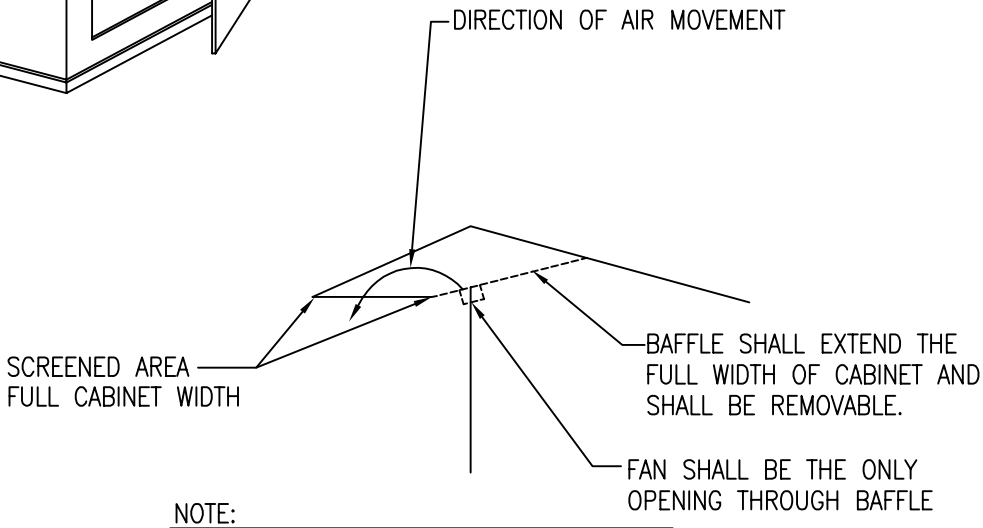

NOTE:
ALL EXHAUST VENTS SHALL HAVE SCREENS

VENTILATION DETAIL

ISSUED:		STANDARD DETAIL		DETAIL NO.
8/92		TYPE IV CONTROL CABINET		T 312
REVISED:				
10/02				SHEET 2 OF 2

TS3-12-2.DWG 12/07/00 10:29

CHANNEL LOCATIONS ON CABINET

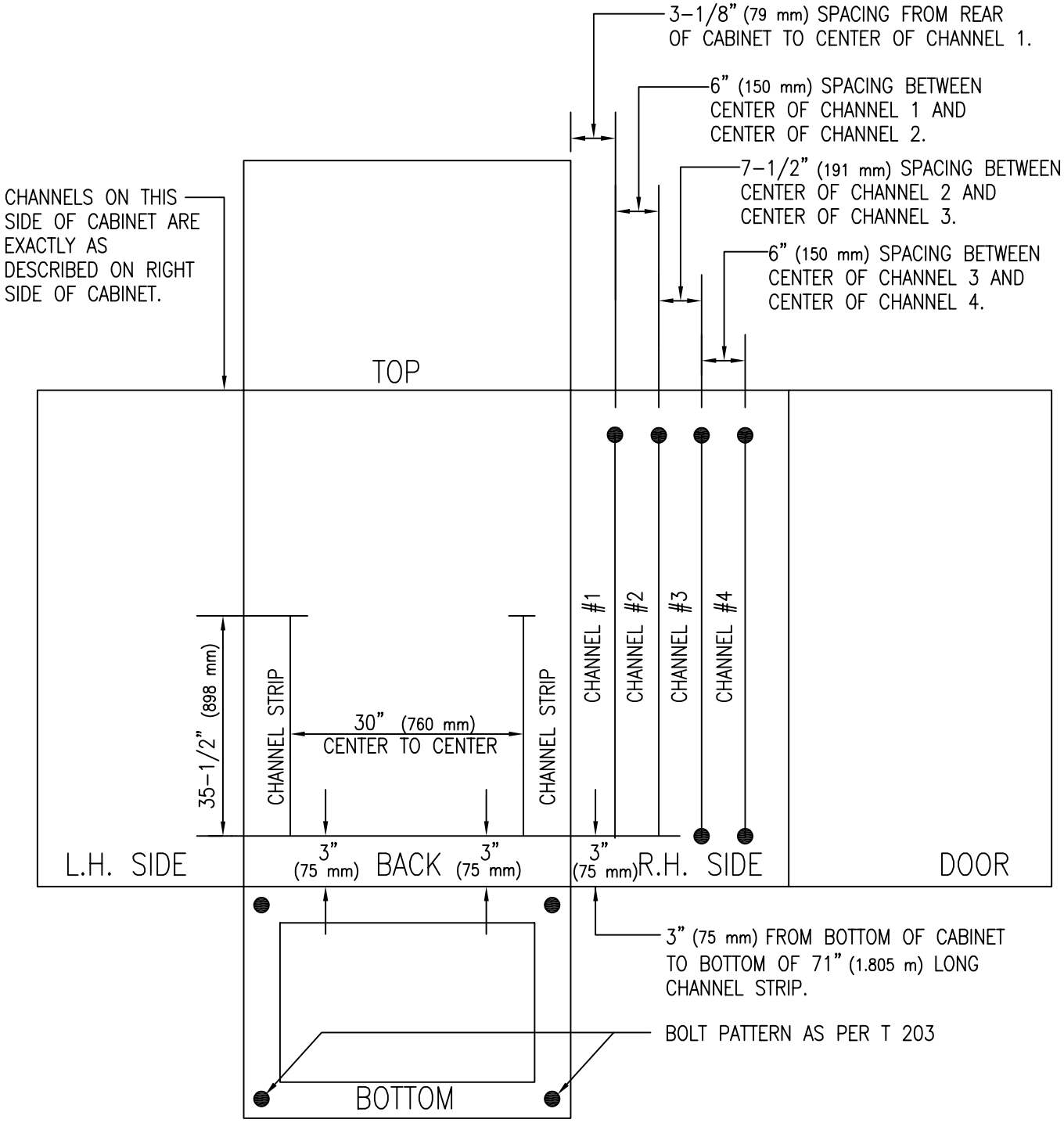

ISSUED:		STANDARD DETAIL		DETAIL NO.
8/92		TYPE V CONTROL CABINET		T 313
REVISED:				
10/02				SHEET 1 OF 7

TS3-13-1.DWG 12/07/00 10:34

SHELF AND MOUNTING HARDWARE

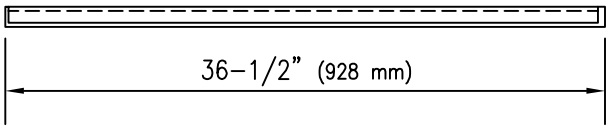

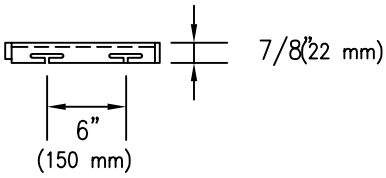

SHELF MOUNTING HARDWARE

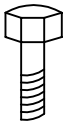

1/4 20 BOLT

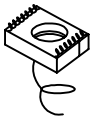

1/4 20 SPRING NUT

ISSUED:		STANDARD DETAIL		DETAIL NO.
8/92		TYPE V CONTROL CABINET		T 313
REVISED:				
10/02				SHEET 2 OF 7

TS3-13-2.DWG 12/07/00 10:35

SIDE CHANNEL DETAIL

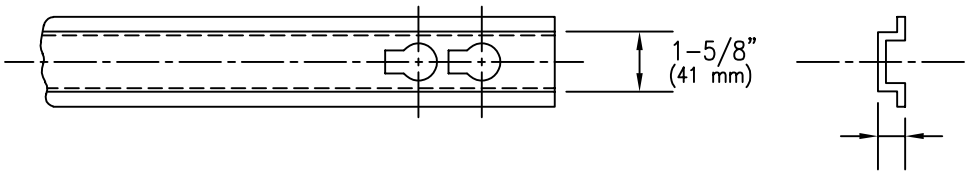

SHELF MOUNTING CHANNELS

KEYHOLES RUN FOR FULL LENGTH OF 71" (1.805 m) CHANNEL THAT IS MOUNTED TO SIDE OF CABINET 3" (75 mm) FROM BOTTOM OF CABINET.

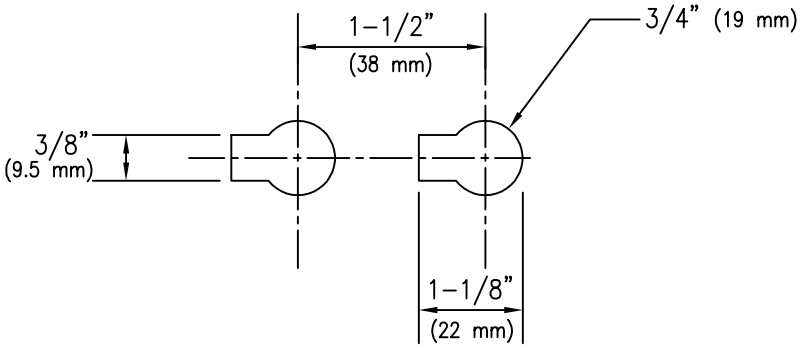

ISSUED:		STANDARD DETAIL		DETAIL NO.
8/92		TYPE V CONTROL CABINET		T 313
REVISED:				
10/02				SHEET 3 OF 7

TS3-13-3.DWG 12/07/00 10:35

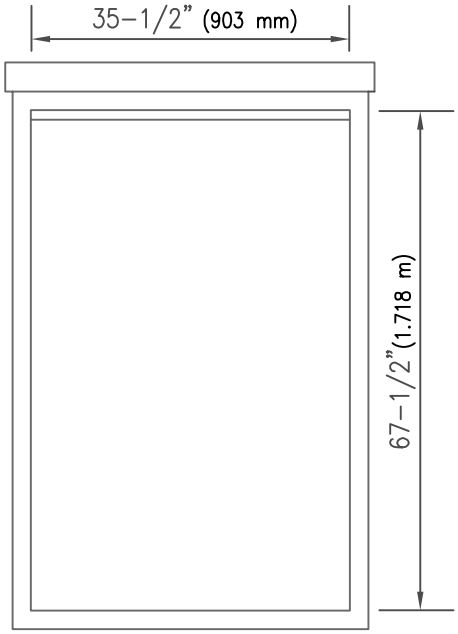

DOOR OPENING

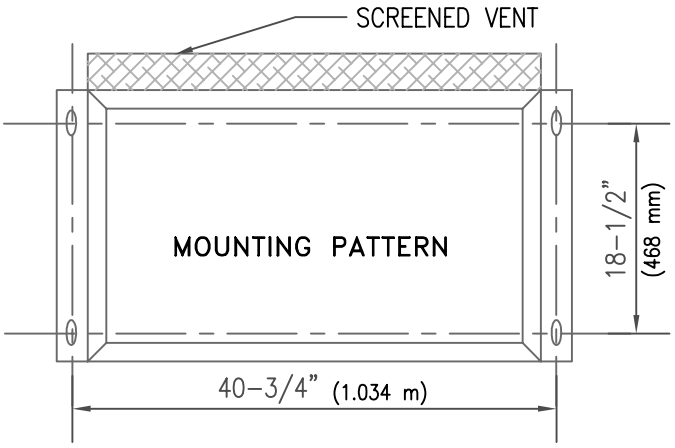

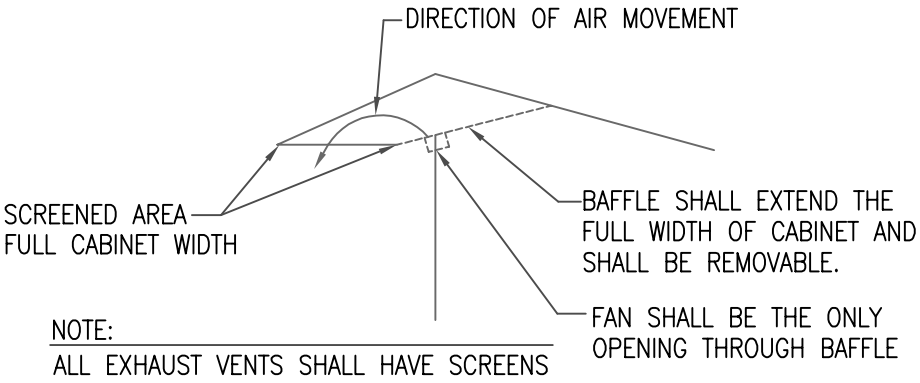

NOTE:
ALL EXHAUST VENTS SHALL HAVE SCREENS

VENTILATION DETAIL

CONSTRUCTION: ENCLOSURE AND DOORS

A. ENCLOSURES

1. MADE FROM 14 GAUGE COLD ROLLED STEEL TO PROVIDE A STRONG AND RIGID CONSTRUCTION.
2. VERTICAL MOUNTING CHANNELS ARE WELDED TO INTERIOR ENCLOSURE WALLS TO PROVIDE ADJUSTABLE SHELF AND PANEL LOCATIONS. MOUNTING HARDWARE INCLUDED.
3. DOOR OPENING HAS A ROLLED UP LIP AT TOP AND FLANGED LIPS ON THREE SIDES WHICH INCREASE STRENGTH AROUND OPENING AND KEEP DUST AND LIQUIDS FROM DROPPING INTO ENCLOSURES WHEN DOOR IS OPENED.
4. ENCLOSURE HAS PROVISIONS FOR MOUNTING FORCED AIR FAN SYSTEM AND HAS A SCREENED AIR EXHAUST OPENING UNDER ROOF OVERHANG.
5. ALL EXTERIOR SEAMS ARE EITHER CONTINUOUSLY WELDED OR SEALED WITH G.E. SILICONE SEALANT.
6. ALL EXTERNAL HARDWARE IS STAINLESS STEEL. ALL INTERNAL HARDWARE IS EITHER STAINLESS STEEL, OR CADMIUM PLATED STEEL, TYPE II, CLASS I.

B. DOORS

1. EQUIPPED WITH THREE POINT LATCHING MECHANISM WITH NYLON ROLLERS AT TOP AND BOTTOM.
2. DOOR HANDLE IS 3/4" (19 mm) DIAMETER STAINLESS STEEL, AND HAS PROVISIONS FOR PADLOCKING.
3. MAIN DOOR LOCK IS CORBIN #1548–1 OR EQUAL.
4. A LOUVERED AIR VENT IS PROVIDED AND HAS FILTER RETAINER BRACKETS.
5. MAIN DOOR IS SEALED WITH CLOSED CELL NEOPRENE GASKET.
6. MAIN DOOR HAS THREE HEAVY GAUGE STAINLESS STEEL HINGES WITH 1/2" (6 mm) DIAMETER STAINLESS STEEL HINGE PINS WELDED IN PLACE. HINGES ARE SECURED WITH 1/2–20 STAINLESS STEEL CARRIAGE BOLTS AND LOCK NUTS.

FINISH:
PAINTED ENCLOSURES ARE TREATED WITH THREE (3) STAGE IRON PHOSPHATE COATING AND FORCE AIR DRIED. STANDARD FINISH COAT IS A ZINC CHROMATE PRIMER FOLLOWED BY A BAKE ALKALI ENAMEL.

ISSUED:		STANDARD DETAIL		DETAIL NO.
8/92	CITY OF TUCSON FOUNDED 1775	TYPE V CONTROL CABINET	THE SEAL of PIMA COUNTY ARIZONA	T 313
REVISED: 10/02				SHEET 4 OF 7

TS3–13–4.DWG 12/07/00 10:36

TYPE V CABINET

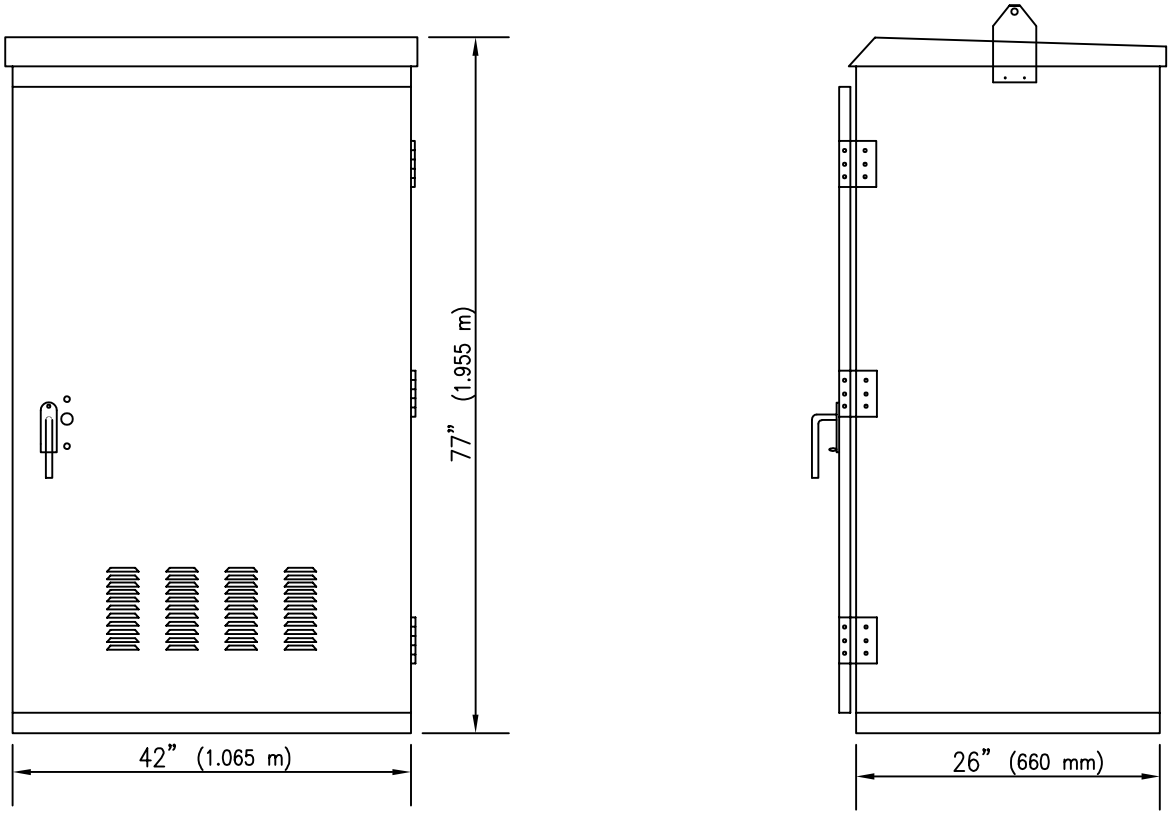

ISSUED:		STANDARD DETAIL		DETAIL NO.
8/92		TYPE V CONTROL CABINET		T 313
REVISED:				
10/02				SHEET 5 OF 7

TS3-13-5.DWG 12/07/00 10:37

CABINET LIFTING BRACKET
2 EA. PER CABINET

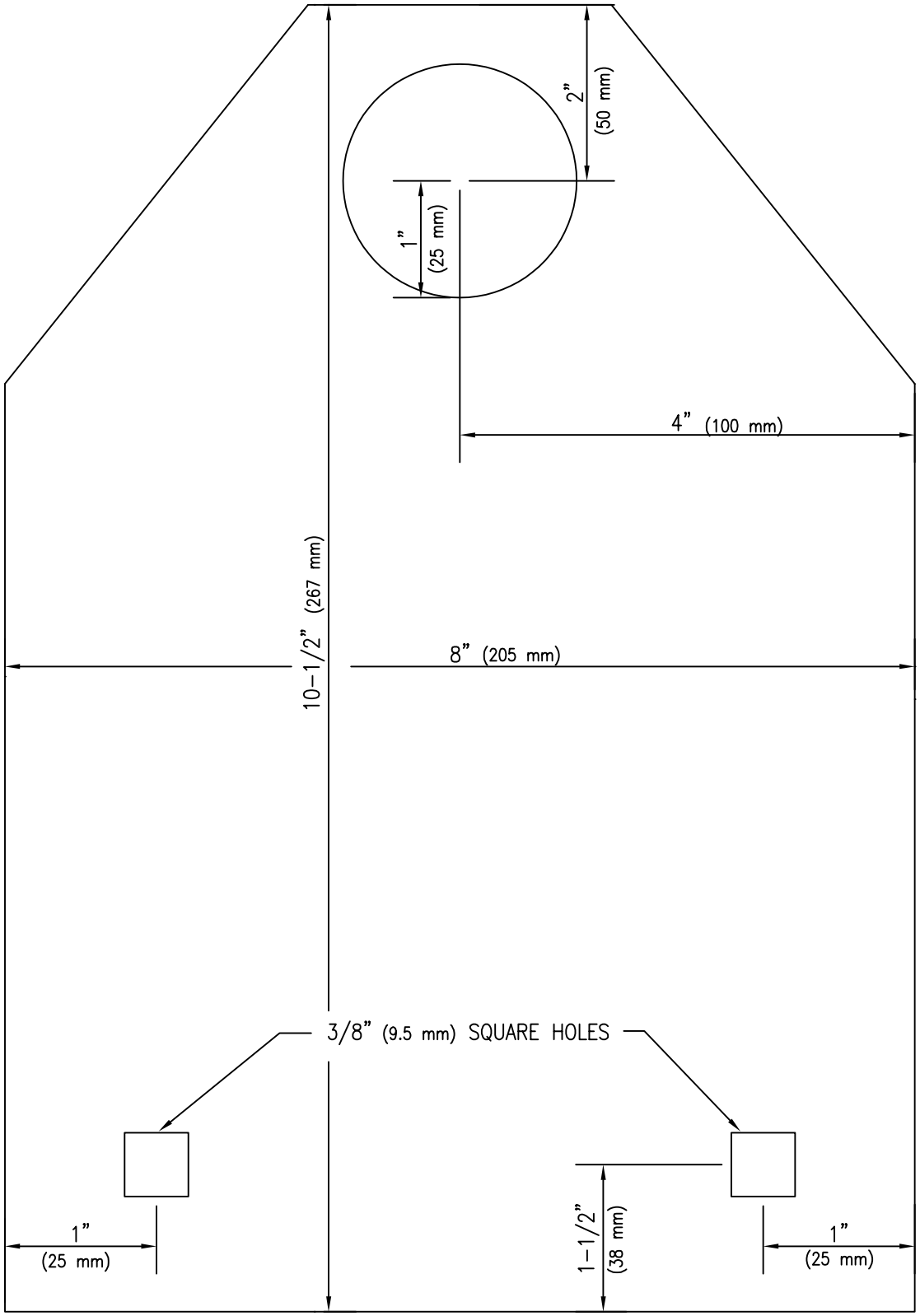

ISSUED:		STANDARD DETAIL		DETAIL NO.
8/92		TYPE V CONTROL CABINET		T 313
REVISED:				
10/02				SHEET 6 OF 7

TS3-13-6.DWG 12/07/00 10:38

TYPE V CABINET

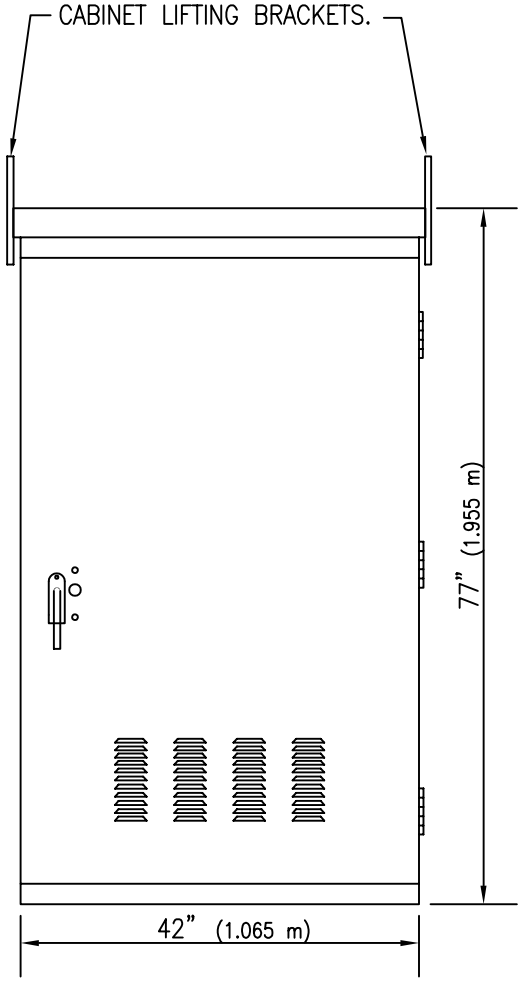

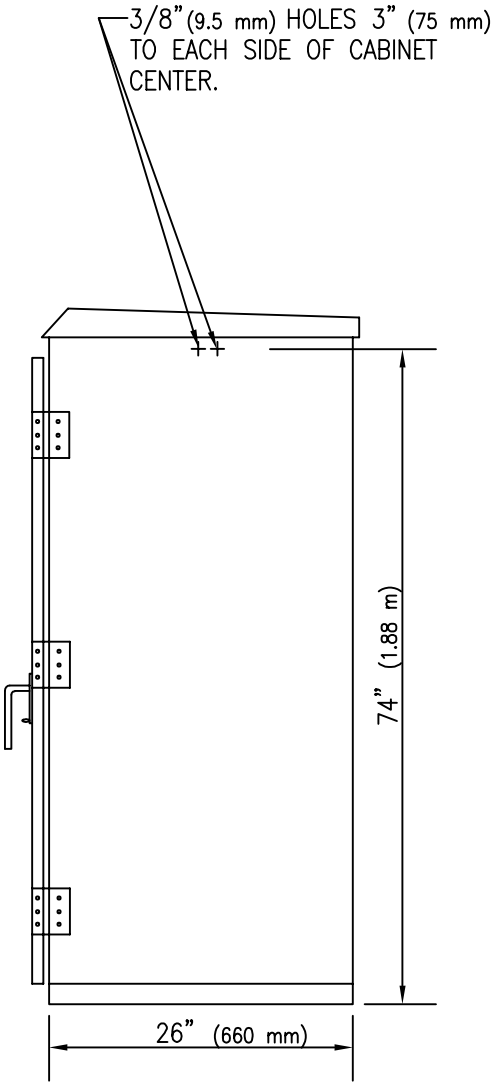

3/8" (9.5 mm) HOLES ARE LOCATED 74" (1.88 m) HIGH AND 3" (75 mm) TO EACH SIDE OF THE CABINET SIDE PANEL CENTER (13" (330 mm)). 2 HOLES ON EACH SIDE OF CABINET BRACKETS ARE SECURED WITH 3/8" x 1" (9.5 mm X 25 mm) CARRIAGE BOLTS.

ISSUED:		STANDARD DETAIL		DETAIL NO.
8/92	CITY OF TUCSON FOUNDED 1775	TYPE V CONTROL CABINET	THE SEAL of PIMA COUNTY ARIZONA	T 313
REVISED: 10/02				SHEET 7 OF 7

TS3-13-7.DWG 12/07/00 10:39

AVERAGE MAINTAINED HORIZONTAL ILLUMINATION: (FOOTCANDLES)

	COMMERCIAL	URBAN INTERMEDIATE	RESIDENTAL
MAJOR	2.0	2.0	2.0
COLLECTOR	1.2	0.9	0.6
LOCAL	0.9	0.6	0.4
ALLEYS	0.6	0.4	0.4

AVERAGE–TO–MINIMUM UNIFORMITY RATIOS:

COMMERCIAL AREAS	3:1
INTERMEDIATE AREAS	3:1
RESIDENTIAL AREAS	6:1

SPACING EQUATION:

$$S = \frac{(C.U.)\ (I.L.)\ (L.L.D.)\ (L.L.D.)}{(E_h)\ (W)}$$

C.U. = COEFFICEINT OF UTILIZATION
I.L. = INITIAL LAMP LUMENS
L.L.D. = LAMP LUMEN DEPRECIATION
L.D.D. = LAMP DIRT DEPRECIATIONS
E_h = AVERAGE MAINTAINED HORIZONTAL ILLUMINATION
W = WIDTH OF ROADWAY

% OF VOLTAGE DEVIATION CRITERIA FOR STREET LIGHTING CIRCUITS.

THE LOWEST VOLTAGE DEVIATION FROM NOMINAL AT THE LAST LUMINAIRE IN THE CIRCUIT SHALL BE AS CLOSE AS POSSIBLE BUT NOT OVER 7.20%, INCLUDING VOLTAGE DROP AND ±5% MAXIMUM UTILITY ALLOWABLE DEVIATION.

EQUATIONS TO CALCULATE % VOLTAGE DEVIATION FOR 480 VOLTS, 10, 3 WIRE CIRCUITS ONLY. *

$$\% \text{ DEVIATION} = \frac{\text{VOLTAGE DROP IN VOLTS} + 10}{480} \times 100$$

FOR OTHER VOLTAGES, DESIGNER SHALL FIND OUT THE VOLTAGE AT UTILITY TRANSFORMER TERMINALS WITH FULL LOAD CONNECTED, DEDUCT FROM THIS VALUE THE VOLTAGE DROP FROM XFMER TO CABINET AND MULTIPLY THE RESULT BY 0.95. THE RESULTING VALUE (VC) SHALL BE USED IN THE FOLLOWING EQUATION.

$$\% \text{ DEVIATION} = \frac{\text{NOMINAL VOLTAGE} - (\text{VC} - \text{VOLTAGE DROP})}{\text{NOMINAL VOLTAGE}} \times 100$$

THE NO LOAD VOLTAGE AT TRANSFORMER TERMINALS IS NOT NECESSARILY THE NOMINAL VOLTAGE. A DIRECT SURVEY OF OUR STREET LIGHTING SERVICES INDICATED THAT TUCSON ELECTRIC POWER MAINTAINS A HIGHER VOLTAGE AT THEIR TRANSFORMER TERMINALS.

NOTE: VOLTAGE DROP SHALL BE BETWEEN 3% AND 5%. UNLESS OTHERWISE NOTED, FIXTURES SHALL NOT HAVE PHOTOCELL RECEPTACLE.

*PREDICATED UPON THE FACT THAT THE UTILITY IS PROVIDING VOLTAGE AT THE LIGHTING CABINET TERMINALS OF 495 VOLTS WITH FULL LOAD CONNECTED.

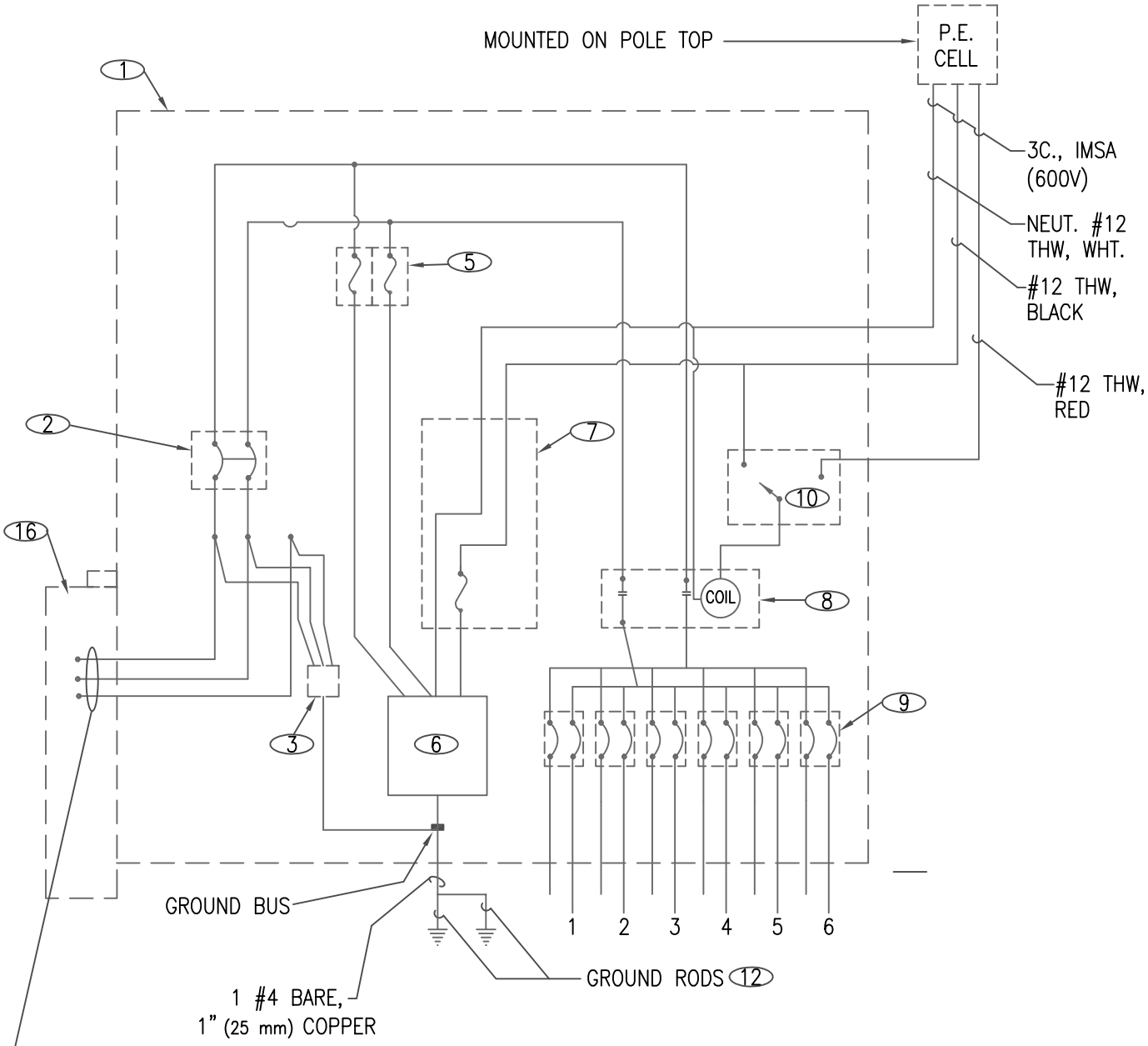

SERVICE 480V, 3W, 1ø, 2 1/2"(64 mm) C TO SERVICE POLE CONDUCTORS BY POWER CO. T.E.P. LANDING LUGS IN SR-425.
IF METERING IS REQUIRED REFER TO T.E.P. SR-414 AND SR-420.

CIRCUITS TO STREETLIGHTS 480 V.
COLOR CODE:
1. RED
2. BLACK
3. BLUE
4. BROWN
5. ORANGE
6. PURPLE

ISSUED:		STANDARD DETAIL		DETAIL NO.
8/92		TYPE I STREET LIGHTING CABINET		T 325
REVISED:				
11/04				SHEET 1 OF 3

TS3-25-1.DWG 12/07/00 10:45

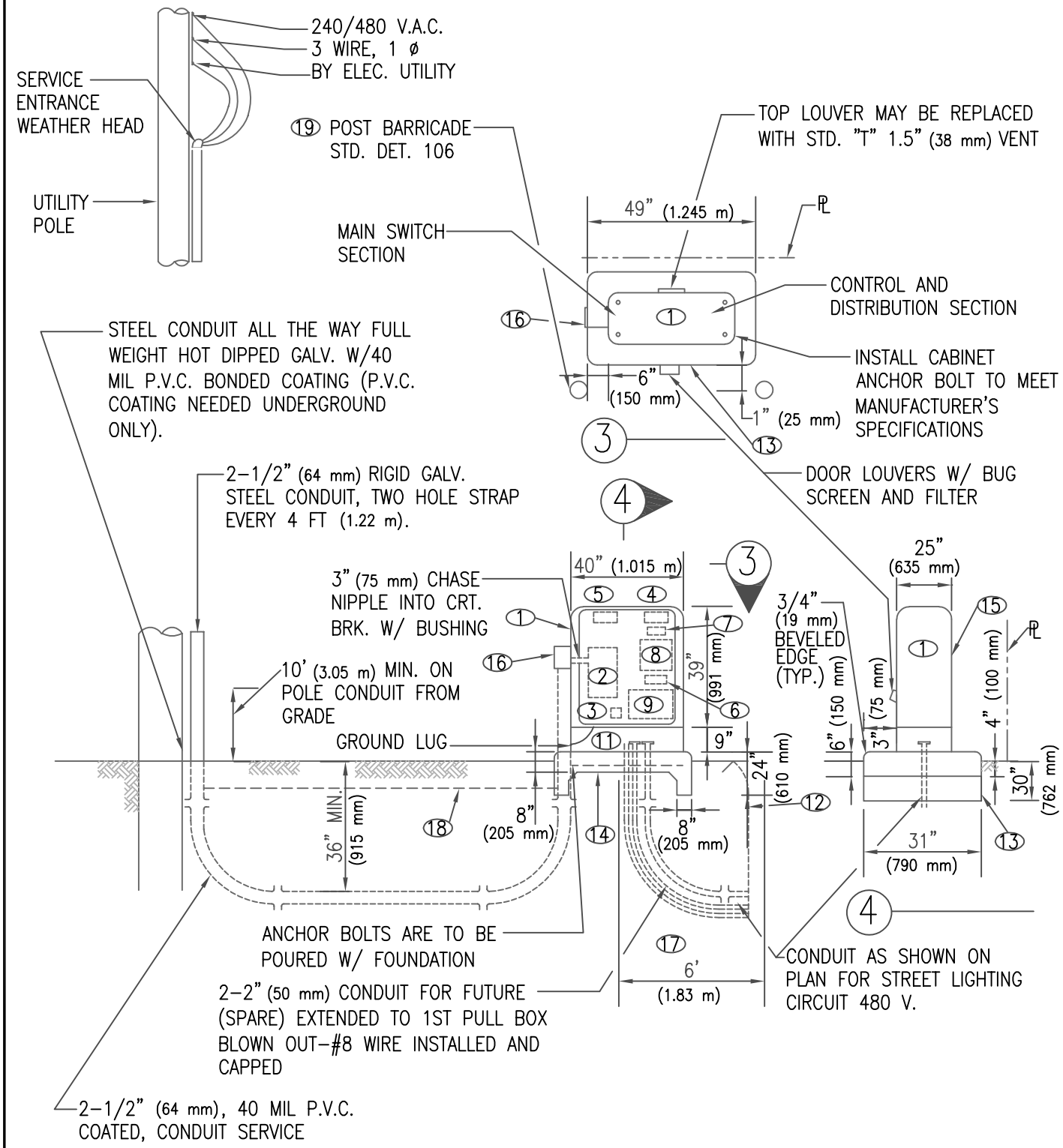

ISSUED:		STANDARD DETAIL		DETAIL NO.
8/92	CITY OF TUCSON FOUNDED 1775	TYPE I STREET LIGHTING CABINET	THE SEAL of PIMA COUNTY ARIZONA	T 325
REVISED: 11/04				SHEET 2 OF 3

TS3-25-2.DWG 12/07/00 10:45

KEYNOTE NO.	MATERIAL LIST
1A.	PAD MOUNTED 1 SECTION N.E.M.A. 3 WEATHERPROOF ENCLOSURE TO BE BOLTED TO A CONCRETE PAD WITH A 9" (230 mm) BASE SECTION PROVIDED AT THE BOTTOM OF THE ENCLOSURE FOR INCOMING AND OUTGOING FEEDERS.
1B.	THE ENCLOSURE IS TO BE CONSTRUCTED OF 10 GA. STEEL WITH REINFORCED ANGLE IRON CORNERS. EACH SECTION SHALL HAVE WELDED PIANO-HINGED DOOR WITH 3 POINT PAD LOCKING LATCH WITH NYLON HINGED ROLLERS. ALL EQUIPMENT TO BE DEAD FRONTED. ON LIVE PARTS EXPOSED. DEAD FRONT SHALL BE HINGED WITH LIFT UP & OUT TYPE HINGE PINS.
1C.	THE ENCLOSURE SHALL BE PAINTED WITH ONE COAT OF HIGH GRADE PRIMER AND 2 COATS OF BROLITE SOLID COAT WHITE ENAMEL, OR EQUAL AND COMPLETED IN A WORKMANSHIP-LIKE FINISH, INSIDE AND OUT.
1D.	A SIGN SHALL BE AFFIXED TO THE DOOR TO READ "DANGER-HIGH VOLTAGE" AS APPROVED BY THE NATIONAL ELECTRIC CODE.
2.	200 AMP 600V BOLT ON TYPE CIRCUIT BREAKER (AIC PER UTILITY CO. AVAILABLE FAULT CURRENT).
3.	SECONDARY TYPE LIGHTING ARRESTOR. 3 W 650 V.A.C. MAX. TO GROUND.
4.	TRANSFORMER CIRCUIT 25A, SLOW BLOW FUSE RATED AT 600 V.
5.	DRY TYPE CONTROL TRANSFORMER 240/480 V.A.C., 1ø PRI TO 120/240 V.A.C., 1ø SEC., 750VA, 60 CYC.
6.	PORCELAIN PLUG TYPE FUSE HOLDER WITH 8 AMP TYPE S FUSE.
7.	N.E.M.A. I TYPE LIGHTING CONTRACTOR, 100 AMP SILVER ALLOY CONTACTS. 29 N.O., 600 V.A.C. WITH 120 V.A.C. CONTROL COIL (AIC PER UTILITY CO. AVAILABLE FAULT CURRENT).
8.	CIRCUIT BREAKER 30 AMP 2P, 600 V.A.C., FRAME BOLT DOWN TYPE, TYPICAL (AIC PER UTILITY CO. AVAILABLE FAULT CURRENT).
9.	HAND-OFF AUTO, TEST SWITCH, 10 AMP, 250 V.A.C.
10.	#4 WIRE, SOLID BARE COPPER IN 1" (25 mm) PVC STUB-OUT.
11.	10' X 3/4" (3 m X 19 mm) COPPER CLAD WELD GROUND ROD WITH CLAMP. TWO REQUIRED SEPARATED BY 6' (1.83 m)
12.	3,000 P.S.I. CONCRETE, CAST IN PLACE.
13.	WIRE MESH 6" X 6" (150 mm X 150 mm) 10/10 WWF CENTERED IN SLAB.
14.	4" (100 mm) REFLECTIVE LETTERS FOR ADDRESS AND IDENTIFICATION.
15.	T.E.P. SR-425 TERMINATION BOX. DOUBLE BARREL LUG ON NEUTRAL. IF METER IS REQUIRED REFER TO T.E.P. SR-420 & SR-414.
16.	PROVIDE 2-2" (50 mm) PVC TO PULL BOX WITH #6 BOND SPRING COILED IN CONDUIT FOR FUTURE.
17.	3" (75 mm) YELLOW OR RED MARKING TAPE "BURIED ELECTRICAL LINE BELOW".
18.	POST BARRICADES PER STANDARD DETAIL 106.

ISSUED:		STANDARD DETAIL		DETAIL NO.
8/92	CITY OF TUCSON FOUNDED 1775	TYPE I STREET LIGHTING CRITERIA	THE SEAL of PIMA COUNTY ARIZONA	T 325
REVISED: 11/04				SHEET 3 OF 3

TS3-25-3.DWG 12/07/00 10:46

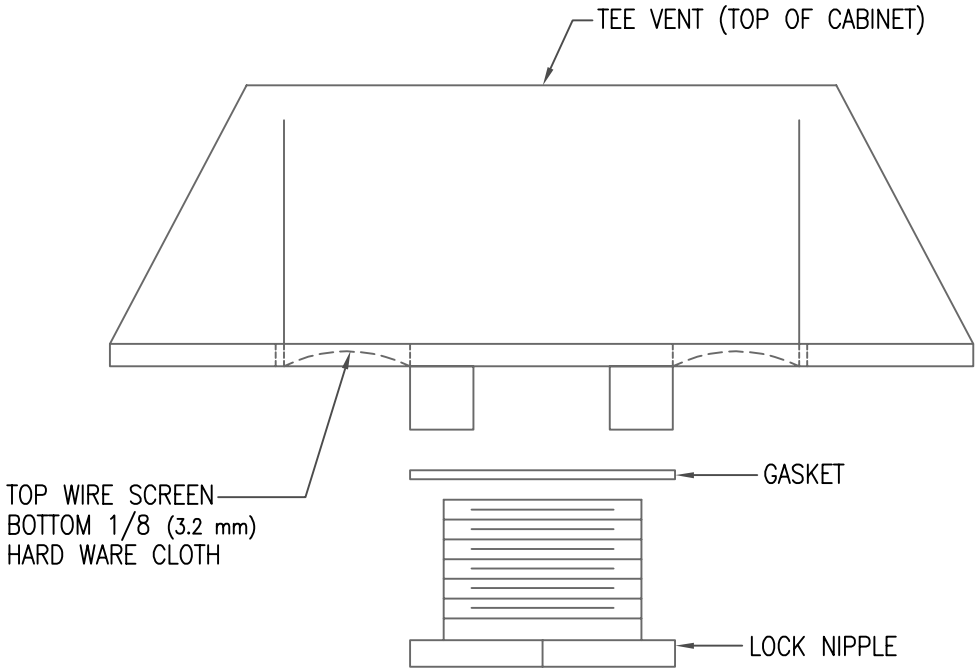

ASSEMBLY SHALL BE PAINTED TO MATCH CABINET

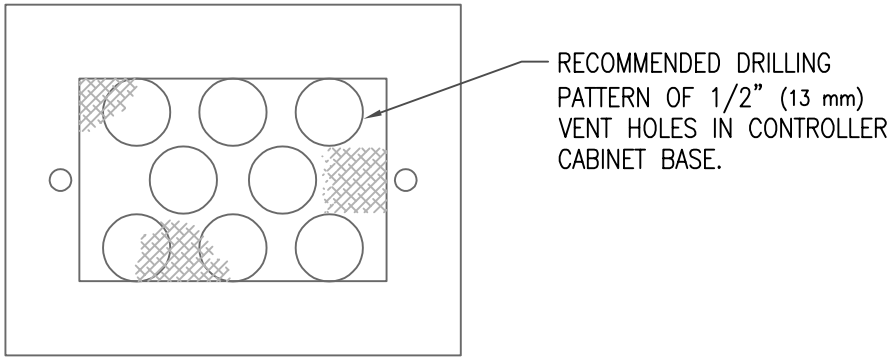

CABINET BASE SCREEN
(COPPER SCREEN)

ISSUED:		STANDARD DETAIL		DETAIL NO.
8/92		TEE VENT (OPTIONAL)		T 327
REVISED:				
10/02				SHEET 1 OF 1

TS3-27.DWG 12/07/00 10:46

GENERAL NOTES

MAST ARMS SHALL HAVE NO DEVIATION LEFT OR RIGHT OF CENTER FROM THE CENTER LINE.

ALL POLES AND MAST ARMS SHALL BE STRAIGHT AND TRUE.

THE CONTRACTOR SHALL REINSTALL EXISTING TRAFFIC SIGNS ON THE NEW POLES AS AN INCIDENTAL PART OF THE POLE INSTALLATION.

ANCHOR BOLTS SHALL BE SET TO THE PROPER GRADE TO ENSURE THAT THE BOLT COVER FITS AND THE GALVANIZED ANCHOR BOLTS ARE NOT DAMAGED.

POLE AND MAST ARM TAPER: 0.14" (4MM) PER FOOT (305MM).

ISSUED:		STANDARD DETAIL		DETAIL NO.
7/89		GENERAL NOTES		T 400
REVISED:				
11/04				SHEET 1 OF 1

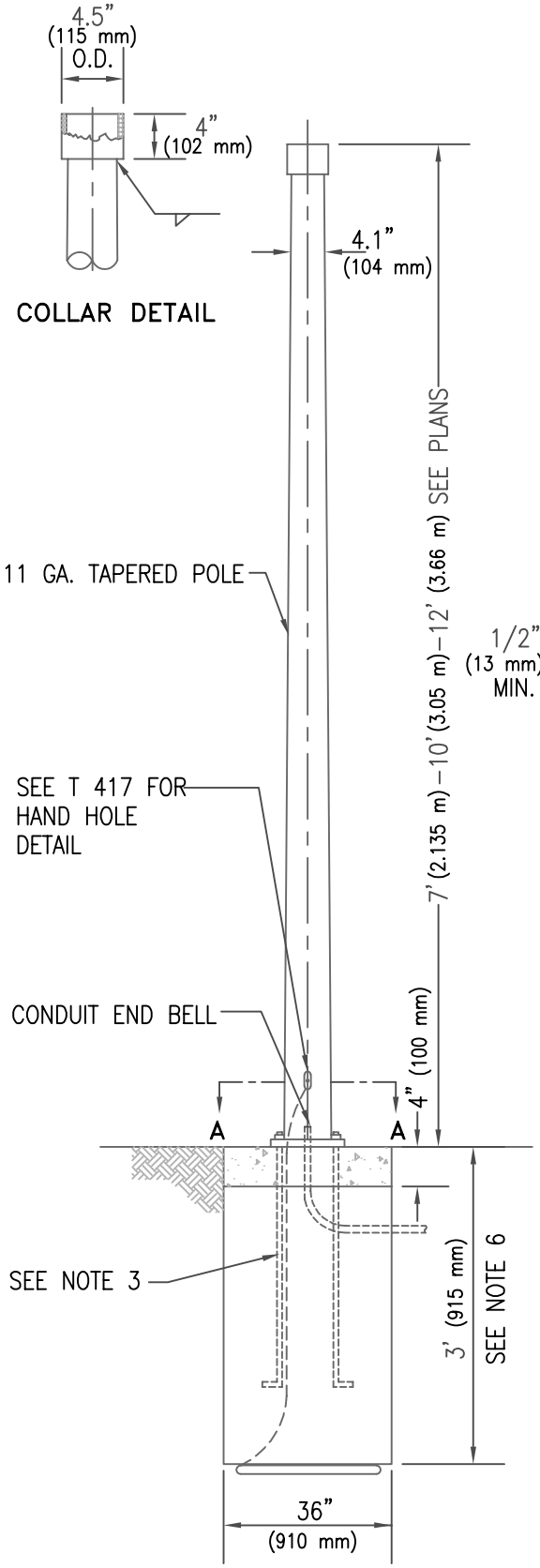

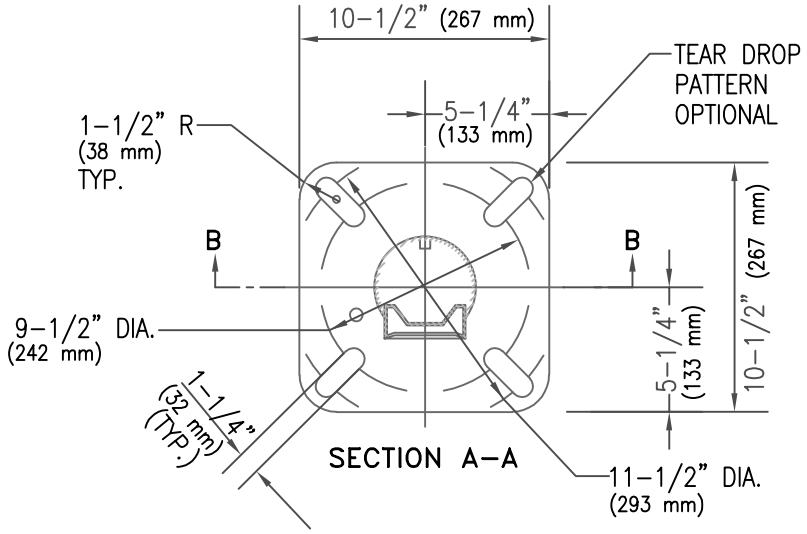

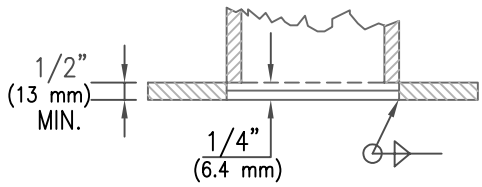

SECTION B–B
BASE PLATE DETAIL

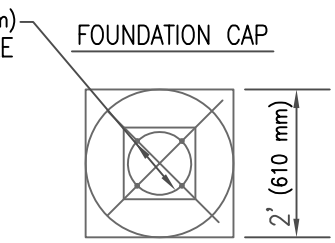

FOUNDATION PLAN

NOTES:

1. ALL MATERIALS AND CONSTRUCTION SHALL CONFORM TO THE REQUIREMENTS OF THE SPECIFICATIONS.
2. THE POLE SHALL BE STEEL WITH HOT DIP GALVANIZED
3. COATING PER ASTM A123.
   ANCHOR BOLTS SHALL BE 1" X 36" X 4" (25 mm X 915 mm X 100 mm) WITH TWO HEX NUTS AND TWO FLAT WASHERS PER BOLT.
4. ANCHOR BOLTS SHALL PROJECT 2–3/4" (70 mm) ABOVE THE FOUNDATION CAP.
5. CONDUIT SHALL PROJECT 2" (50 mm) ABOVE THE FOUNDATION CAP.
6. UNSTABLE SOIL MAY REQUIRE DEEPER FOUNDATION.
7. A 25' (7.62 m) COIL OF No. 4 AWG BARE COPPER CONDUCTOR SHALL BE INSTALLED BEFORE THE CONCRETE IS POURED AND CONNECTED TO POLE GROUNDING SCREW IN THIS HAND HOLE.
8. FOUNDATION HOLE SHALL BE AUGERED AND CLASS "S" (3000 PSI) CONCRETE POURED AGAINST UNDISTURBED COMPACTED EARTH.
9. ALL POLES AND MAST ARMS TO BE STRAIGHT AND TRUE.
10. POLE TAPER: 0.14"(4 mm) PER FOOT (305 mm).

ISSUED:		STANDARD DETAIL		T.S. 4-1 DETAIL NO.
7/89	CITY OF TUCSON FOUNDED 1775	TYPE 'A' POLE	THE SEAL of PIMA COUNTY ARIZONA	T 401
REVISED: 11/04				SHEET 1 OF 1

TS4–1.DWG 12/07/00 10:48

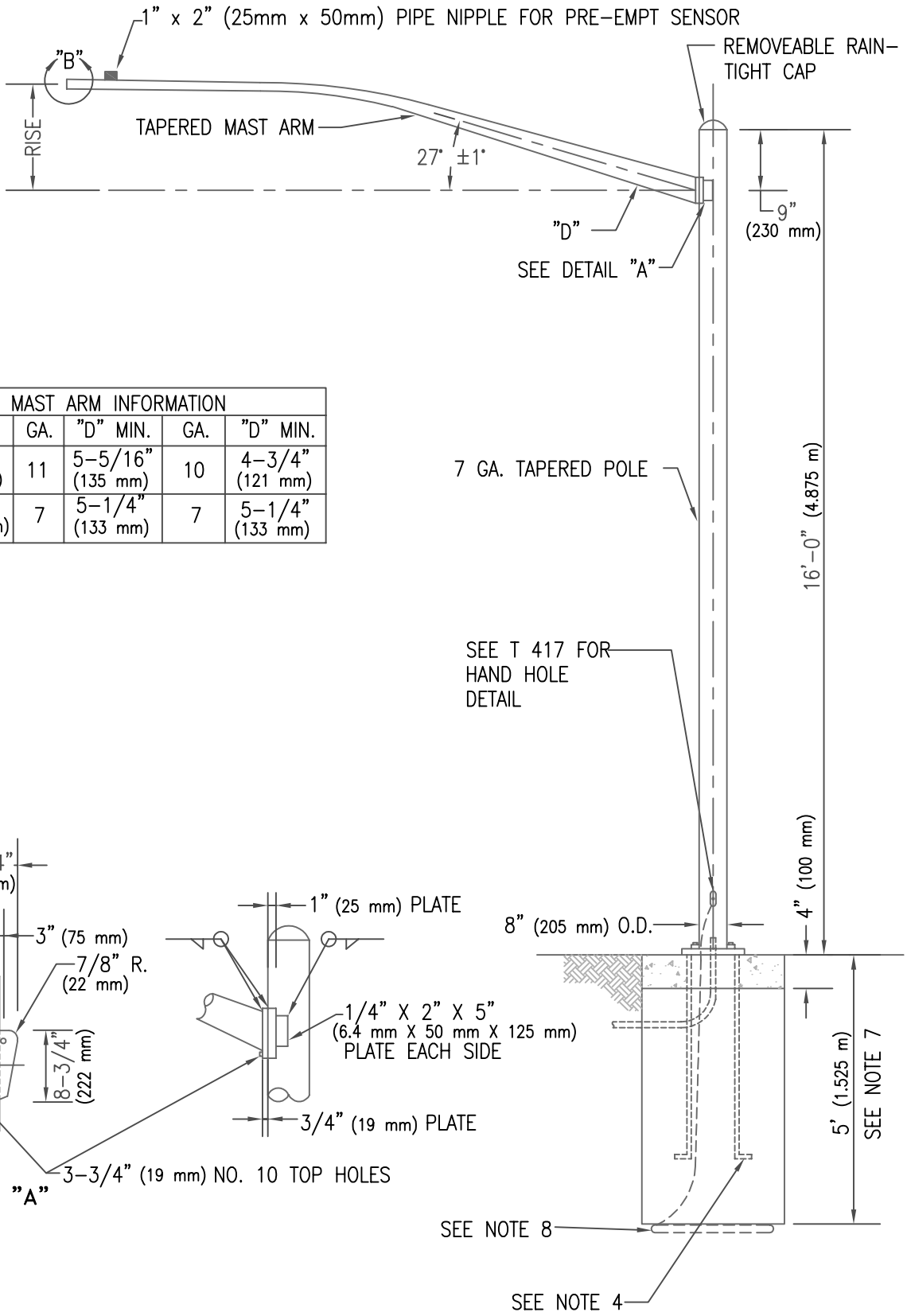

MAST ARM INFORMATION					
LGTH	RISE	GA.	"D" MIN.	GA.	"D" MIN.
15' (4.57 m)	4'-9" (1.45 m)	11	5-5/16" (135 mm)	10	4-3/4" (121 mm)
20' (6.095 m)	5'-9" (1.755 m)	7	5-1/4" (133 mm)	7	5-1/4" (133 mm)

NOTE: POLES AND MAST ARM TAPER: 0.14" (4mm) PER FOOT (305mm)
ALL POLES AND MAST ARMS TO BE STRAIGHT AND TRUE

ISSUED:	STANDARD DETAIL	T.S. 4-5 DETAIL NO.
7/89	TYPE 'E' POLE MAST ARM	T 405
REVISED: 11/04		SHEET 1 OF 2

TS4-5-1.DWG 12/07/00 10:51

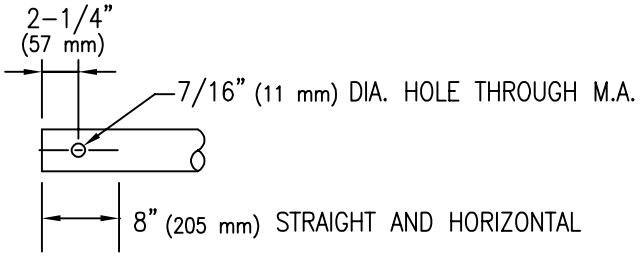

DETAIL "B"

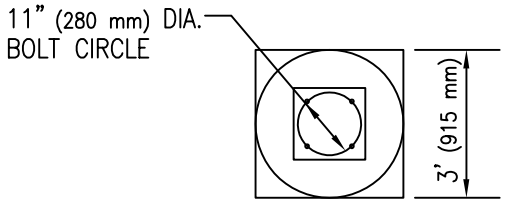

FOUNDATION PLAN

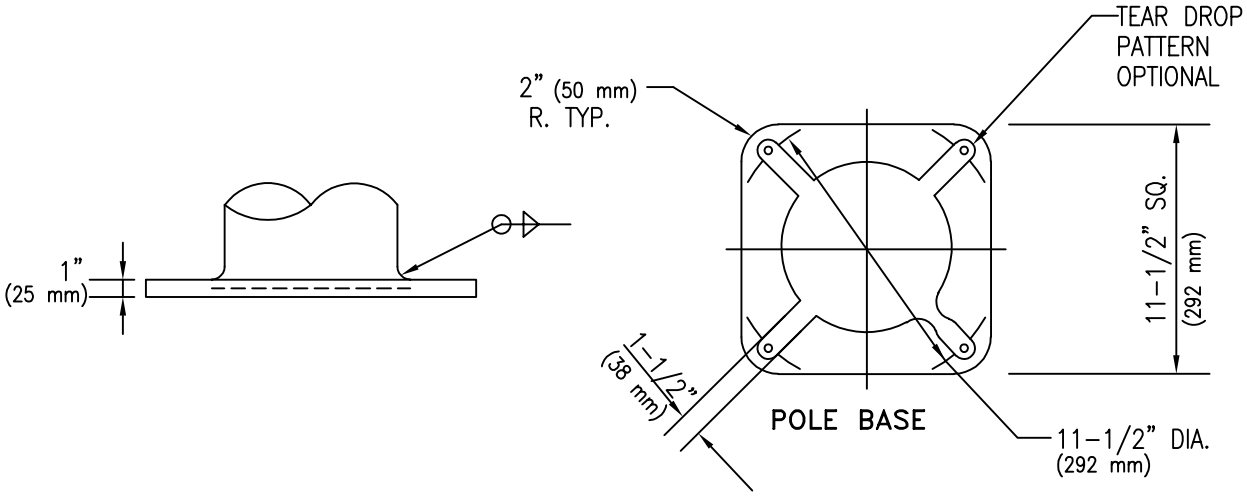

POLE BASE

NOTES:

1. ALL MATERIAL AND CONSTRICTION SHALL CONFORM TO THE REQUIREMENTS OF THE STANDARD SPECIFICATIONS.
2. THE POLE SHALL BE STEEL WITH HOT DIP GALVANIZED COATING.
3. THE SIGNAL MAST ARM SHALL BE TAPERED STEEL. SEE TABLE FOR GAUGE AND DIAMETER.
4. ANCHOR BOLTS SHALL BE 1-1/4" X 44" X 4" (32 mm X 1.115 m X 100 mm), WITH TWO HEX NUTS AND TWO FLAT WASHERS PER BOLT.
5. ANCHOR BOLTS SHALL PROJECT 3" (75 mm) ABOVE THE FOUNDATION CAP.
6. CONDUIT SHALL PROJECT 2" (50 mm) ABOVE THE FOUNDATION CAP.
7. UNSTABLE SOIL MAY REQUIRE DEEPER FOUNDATION.
8. A 25' (7.62 m) COIL OF No. 4 AWG BARE COPPER CONDUCTOR SHALL BE INSTALLED BEFORE THE CONCRETE IS POURED AND CONNECTED TO THE POLE GROUNDING SCREW IN THE HAND HOLE.
9. THE FOUNDATION HOLE SHALL BE AUGERED AND CLASS "S" (3000 PSI) CONCRETE POURED AGAINST UNDISTURBED COMPACTED EARTH.
10. ALL POLES AND MAST ARMS TO BE STRAIGHT AND TRUE.

ISSUED:		STANDARD DETAIL		DETAIL NO.
7/89		TYPE 'E' POLE MAST ARM		T 405
REVISED:				SHEET 2 OF 2
10/02				

TS4-5-2.DWG 12/07/00 10:52

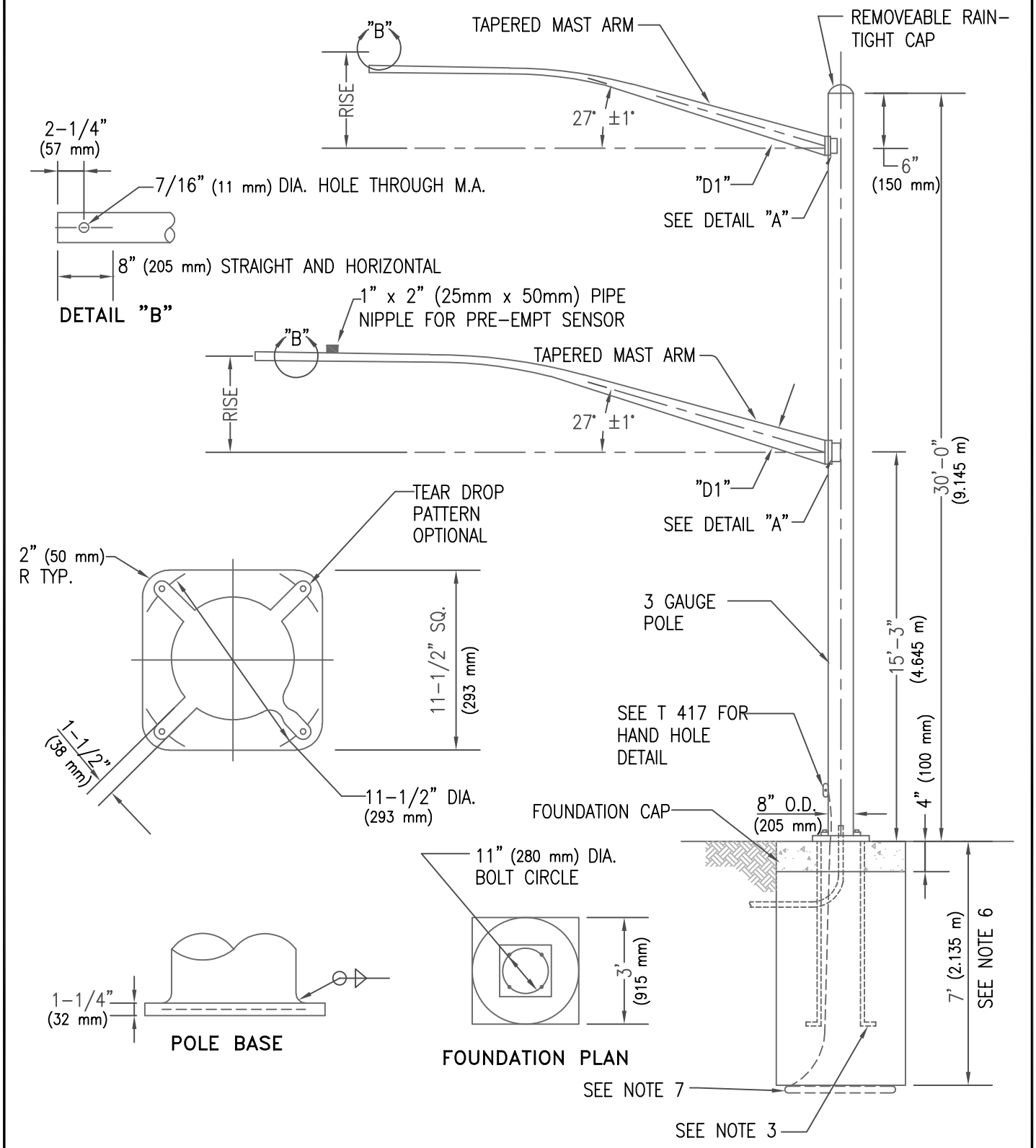

NOTE: POLES AND MAST ARM TAPER: 0.14" (4mm) PER FOOT (305mm)
ALL POLES AND MAST ARMS TO BE STRAIGHT AND TRUE
ALL MAST ARMS SHALL HAVE A 90° PIPE TENON. REFER TO STD. DET. T 412, DETAIL "B"

ISSUED:		STANDARD DETAIL		T.S. 4-6 DETAIL NO.
7/89		TYPE 'F' POLE MAST ARM		T 406
REVISED:				
11/04				SHEET 1 OF 2

TS4-6-1.DWG 12/07/00 10:53

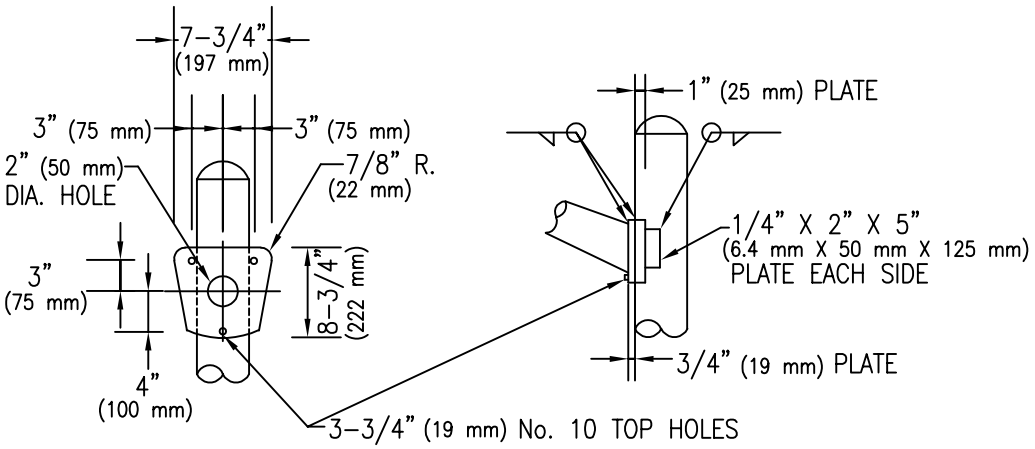

DETAIL "A"

MAST ARM INFORMATION						
LGTH	RISE	GA.	"D1" MIN.	"D2" MIN.	GA.	"D1 & D2" MIN.
15' (4.57 m)	4'-9" (1.45 m)	11	4-1/4" (108 mm)	5-5/16" (135 mm)	10	4-3/4" (121 mm)
20' (6.095 m)	5'-9" (1.755 m)	7	5-1/4" (133 mm)	5-1/4" (133 mm)	7	5-1/4" (133 mm)

NOTES:

1. ALL MATERIAL AND CONSTRUCTION SHALL CONFORM TO THE REQUIREMENTS OF THE STANDARD SPECIFICATIONS.
2. THE POLE SHALL BE STEEL WITH HOT DIP GALVANIZED COATING PER ASTM A123. SEE TABLE
3. FOR MAST ARM GAUGES.
4. ANCHOR BOLTS SHALL BE 1-1/4" X 44" X 4" (32 mm X 1.115 m X 100 mm), WITH TWO HEX NUTS AND TWO FLAT WASHERS PER BOLT.
5. ANCHOR BOLTS SHALL PROJECT 3" (75 mm) ABOVE THE FOUNDATION CAP.
6. CONDUIT SHALL PROJECT 2" (50 mm) ABOVE THE FOUNDATION CAP.
7. UNSTABLE SOIL MAY REQUIRE DEEPER FOUNDATION.
8. A 25' (7.62 m) COIL OF No. 4 AWG BARE COPPER CONDUCTOR SHALL BE INSTALLED BEFORE THE CONCRETE IS POURED AND CONNECTED TO THE POLE GROUNDING SCREW IN THE HAND HOLE.
9. THE FOUNDATION HOLE SHALL BE AUGERED AND CLASS "S" (3000 PSI) CONCRETE POURED AGAINST UNDISTURBED COMPACTED EARTH.
   ALL POLES AND MAST ARMS TO BE STRAIGHT AND TRUE.

ISSUED:	STANDARD DETAIL	DETAIL NO.
7/89	TYPE 'F' POLE MAST ARM	T 406
REVISED: 10/02		SHEET 2 OF 2

TS4-6-2.DWG 12/07/00 10:53

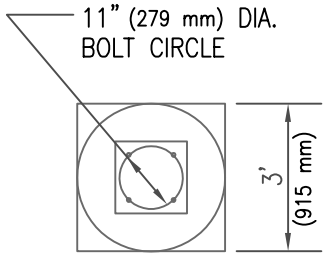

FOUNDATION PLAN

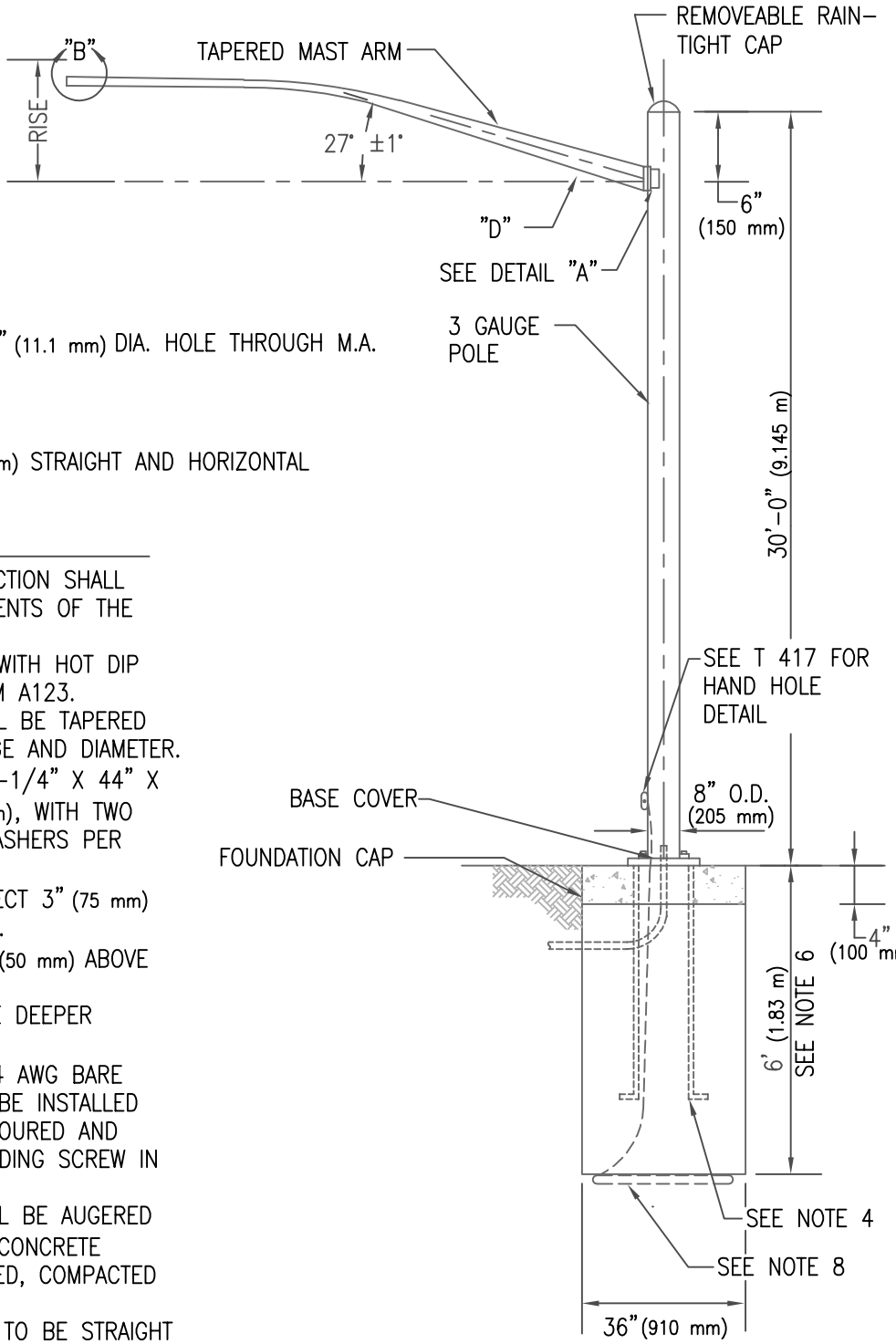

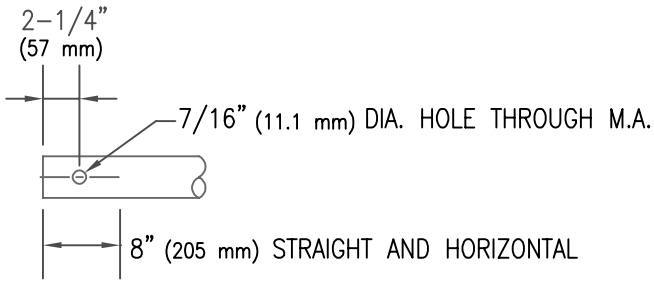

DETAIL "B"

NOTES:

1. ALL MATERIAL AND CONSTRUCTION SHALL CONFORM TO THE REQUIREMENTS OF THE SPECIFICATIONS.
2. THE POLE SHALL BE STEEL WITH HOT DIP GALVANIZED FINISH PER ASTM A123.
3. THE SIGNAL MAST ARM SHALL BE TAPERED STEEL. SEE TABLE FOR GAUGE AND DIAMETER.
4. ANCHOR BOLTS SHALL BE 1-1/4" X 44" X 4" (32 mm X 1.115 m X 100 mm), WITH TWO HEX NUTS AND TWO FLAT WASHERS PER BOLT.
5. ANCHOR BOLTS SHALL PROJECT 3" (75 mm) ABOVE THE FOUNDATION CAP.
6. CONDUIT SHALL PROJECT 2" (50 mm) ABOVE THE FOUNDATION CAP
7. UNSTABLE SOIL MAY REQUIRE DEEPER FOUNDATIONS.
8. A 25' (7.62 m) COIL OF No. 4 AWG BARE COPPER CONDUCTOR SHALL BE INSTALLED BEFORE THE CONCRETE IS POURED AND CONNECTED TO POLE GROUNDING SCREW IN THE HAND HOLE.
9. THE FOUNDATION HOLE SHALL BE AUGERED AND CLASS "S" (3000 PSI) CONCRETE POURED AGAINST UNDISTURBED, COMPACTED EARTH.
10. ALL POLES AND MAST ARMS TO BE STRAIGHT AND TRUE.

NOTE: POLES AND MAST ARM TAPER: 0.14" (4mm) PER FOOT (305mm)

ISSUED:		STANDARD DETAIL		T.S. 4-7 DETAIL NO.
7/89		TYPE 'G' POLE MAST ARM		T 407
REVISED: 11/04				SHEET 1 OF 2

TS4-7-1.DWG 12/07/00 10:54

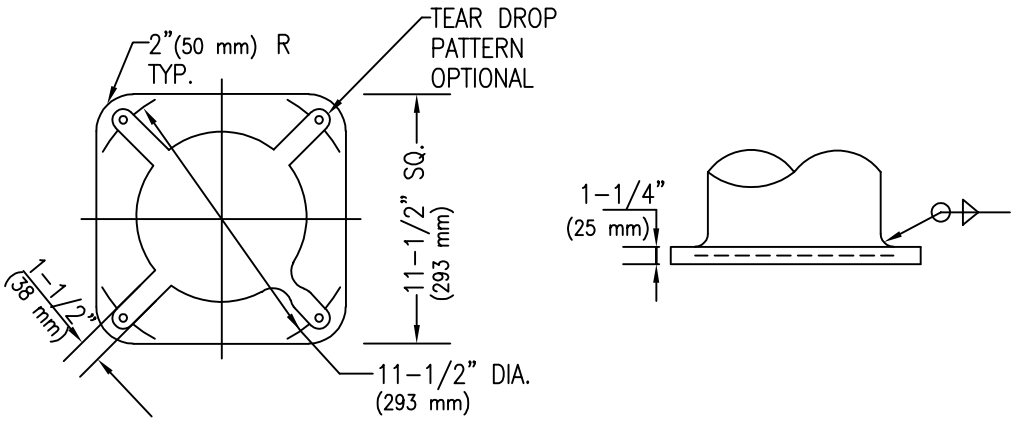

POLE BASE

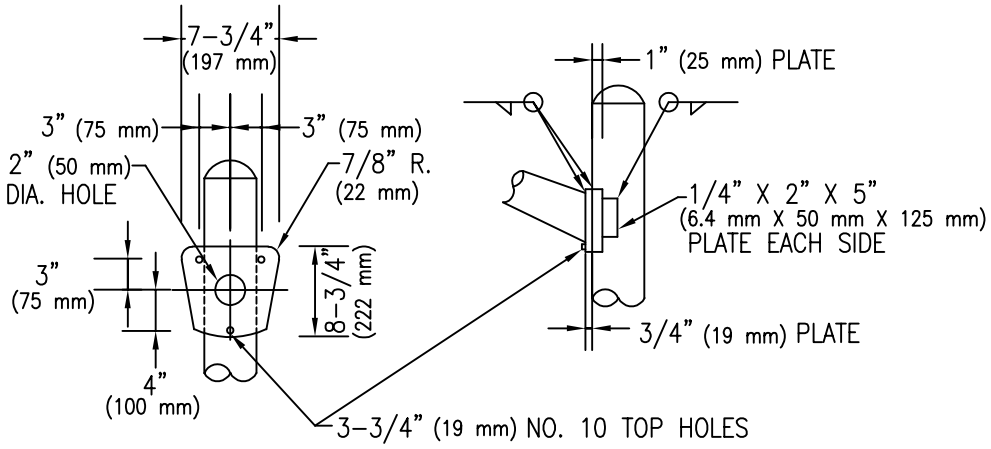

DETAIL "A"

MAST ARM INFORMATION					
LGTH	RISE	GA.	"D" MIN.	GA.	"D" MIN.
15' (4.57 m)	4'-9" (1.45 m)	11	4-1/4" (108 mm)	10	4-3/4" (121 mm)
20' (6.095 m)	5'-9" (1.755 m)	7	5-1/4" (133 mm)	7	5-1/4" (133 mm)

ISSUED:	STANDARD DETAIL	DETAIL NO.
7/89	TYPE 'G' POLE MAST ARM	T 407
REVISED: 10/02		SHEET 2 OF 2

TS4-7-2.DWG 12/07/00 10:55

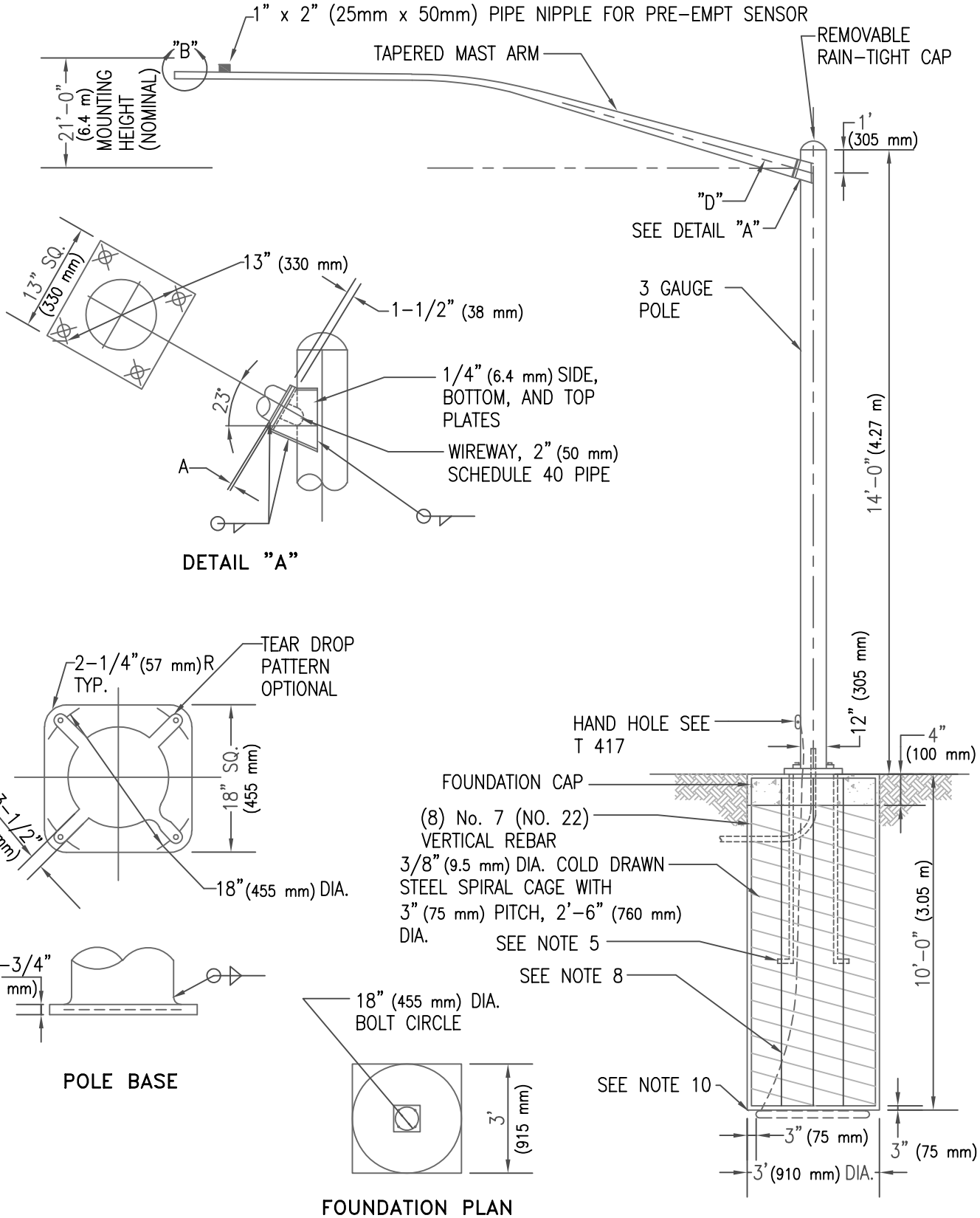

NOTE: POLES AND MAST ARM TAPER: 0.14" (4mm) PER FOOT (305mm)
ALL POLES AND MAST ARMS TO BE STRAIGHT AND TRUE

ISSUED:	STANDARD DETAIL	T.S. 4-10 DETAIL NO.
7/89	TYPE 'J' POLE MAST ARM	T 410
REVISED: 11/04		SHEET 1 OF 2

TS4-10-1.DWG 12/07/00 10:56

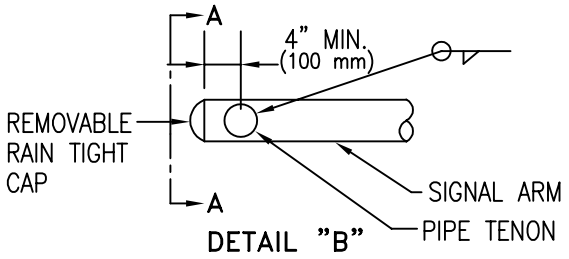

DETAIL "B"

MAST ARM INFORMATION				
NOM M.A. LENGTH	25' (7.62 m)	30' (9.145 m)	35' (10.67 m)	40' (12.19 m)
GAUGE	7	7	3	3
A	1" (25 mm)	1" (25 mm)	1-1/4" (32 mm)	1-1/4" (32 mm)
B MIN.	7" (178 mm)	8" (203 mm)	6-11/16" (221 mm)	9-3/8" (239 mm)

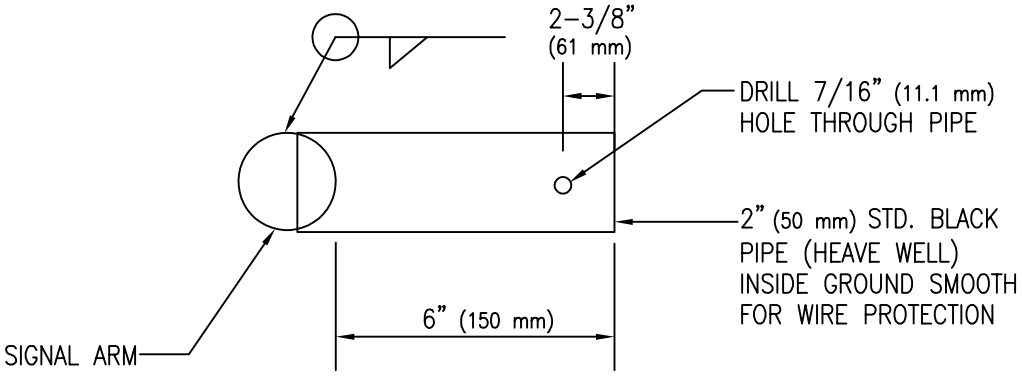

SECTION A – A

NOTES:

1. ALL MATERIALS AND CONSTRUCTION SHALL CONFORM TO THE REQUIREMENTS OF THE SPECIFICATIONS. HOT DIP GALVANIZED FINISH SHALL BE PER ASTM A123.
2. THE POLE SHALL BE TAPERED STEEL. WALL THICKNESS SHALL BE 3 GAUGES.
3. THE SIGNAL MAST ARM SHALL BE TAPERED STEEL. SEE TABLE FOR DIAMETER AND GAUGE.
4. SIGNAL MAST ARMS REQUIRE FOUR 1-1/4" (32 mm) – 7 HIGH STRENGTH BOLTS ASTM A 325.
5. ANCHOR BOLTS SHALL BE 2" X 90" X 6" (50 mm X 2.285 m X 150 mm) WITH TWO HEX NUTS AND TWO FLAT WASHERS PER BOLT.
6. ANCHOR BOLTS SHALL PROJECT 4-1/2" (115 mm) ABOVE THE FOUNDATION CAP.
7. CONDUIT SHALL PROJECT 2" (50 mm) ABOVE THE FOUNDATION CAP.
8. THE FOUNDATION HOLE SHALL BE AUGERED AND CLASS "S" (3000 PSI) CONCRETE POURED AGAINST UNDISTURBED, COMPACTED EARTH.
9. UNSTABLE SOIL MAY REQUIRE DEEPER FOUNDATION.
10. A 25' (7.62 m) COIL OF NO. 4 AWG BARE COPPER CONDUCTOR SHALL BE INSTALLED BEFORE THE CONCRETE IS POURED AND CONNECTED TO POLE GROUNDING SCREW IN THE HAND HOLE.
11. FOR INBOARD TENON, WHEN SPECIFIED, SEE TENON DETAIL ON T 901.
12. ALL POLES AND MAST ARMS TO BE STRAIGHT AND TRUE.

ISSUED:		STANDARD DETAIL		DETAIL NO.
7/89	CITY OF TUCSON FOUNDED 1775	TYPE 'J' POLE MAST ARM	THE SEAL of PIMA COUNTY ARIZONA	T 410
REVISED: 10/02				SHEET 2 OF 2

TS4-10-2.DWG 12/07/00 10:56

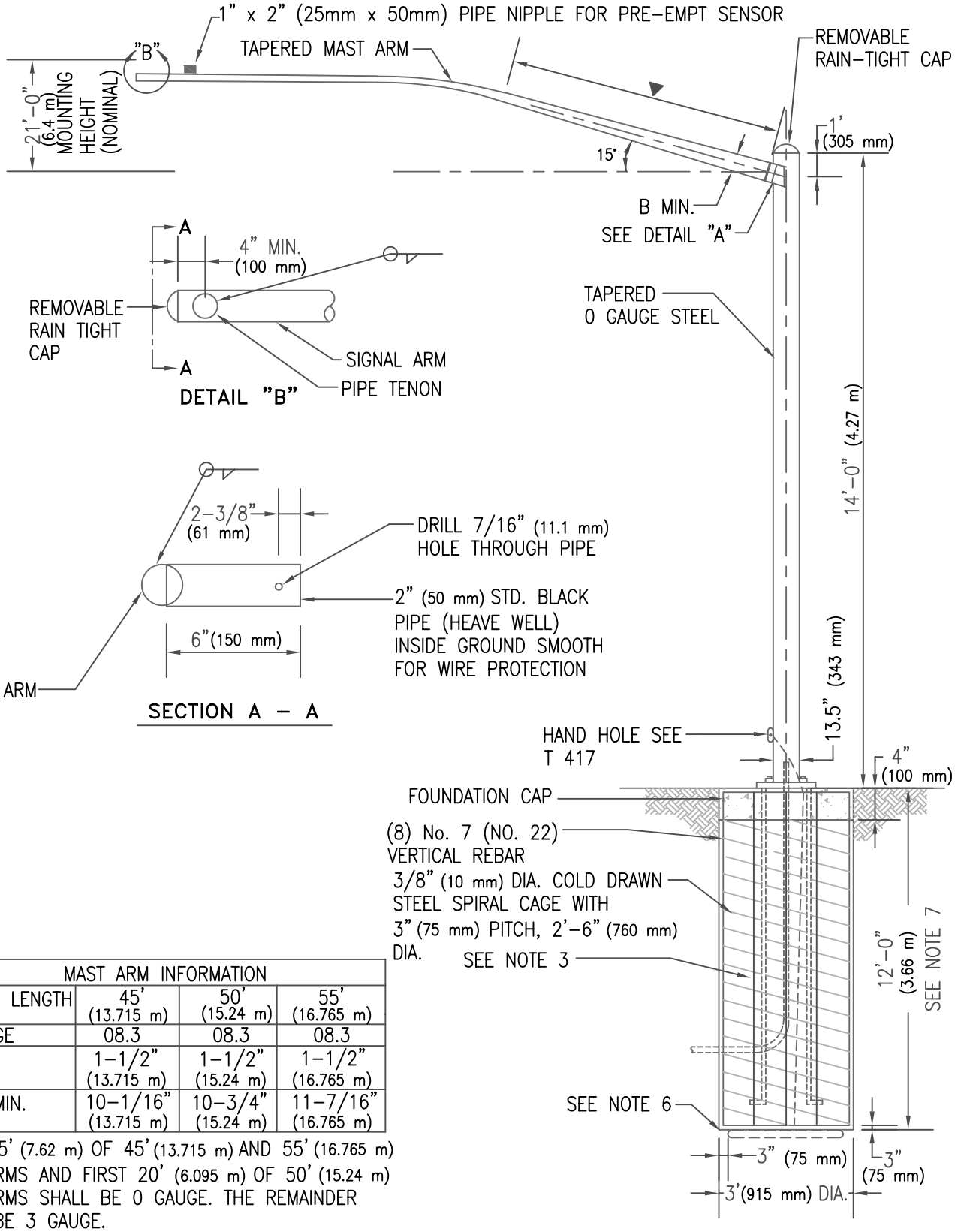

MAST ARM INFORMATION			
NOM M.A. LENGTH	45' (13.715 m)	50' (15.24 m)	55' (16.765 m)
GAUGE	08.3	08.3	08.3
A	1-1/2" (13.715 m)	1-1/2" (15.24 m)	1-1/2" (16.765 m)
B MIN.	10-1/16" (13.715 m)	10-3/4" (15.24 m)	11-7/16" (16.765 m)

▼FIRST 25' (7.62 m) OF 45' (13.715 m) AND 55' (16.765 m) MAST ARMS AND FIRST 20' (6.095 m) OF 50' (15.24 m) MAST ARMS SHALL BE 0 GAUGE. THE REMAINDER SHALL BE 3 GAUGE.

NOTE: POLES AND MAST ARM TAPER: 0.14" (4mm) PER FOOT (305mm)
ALL POLES AND MAST ARMS TO BE STRAIGHT AND TRUE

ISSUED:	STANDARD DETAIL	T.S. 4-11 DETAIL NO.
7/89	TYPE 'K' POLE MAST ARM	T 411
REVISED: 11/04		SHEET 1 OF 2

TS4-11-1.DWG 12/07/00 10:59

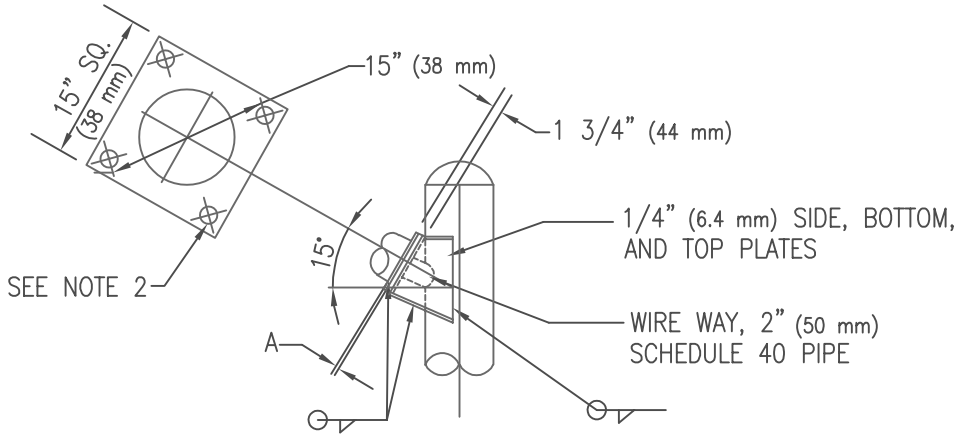

DETAIL "A"

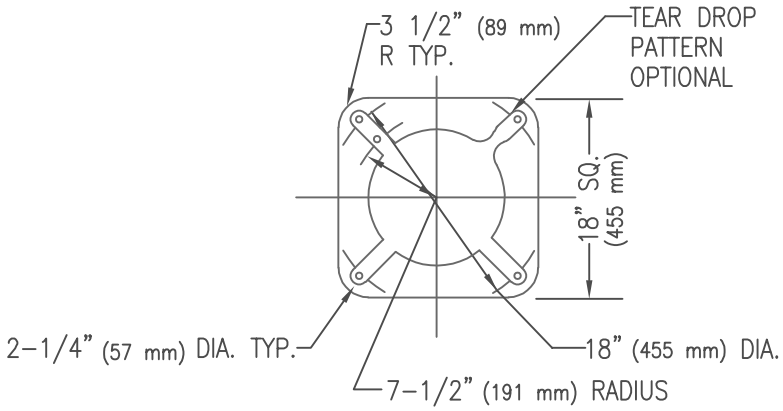

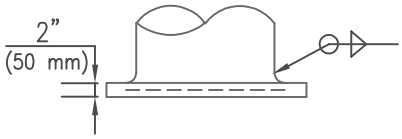

POLE BASE

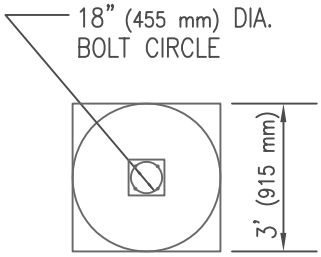

FOUNDATION PLAN

NOTES:

1. ALL MATERIALS AND CONSTRUCTION SHALL CONFORM TO THE REQUIREMENTS OF THE STANDARD SPECIFICATIONS. HOT DIP GALVANIZED FINISH PER ASTM A123.
2. MAST ARMS REQUIRE FOUR 11" (32 mm) – 7 HIGH STRENGTH BOLTS ASTM A 325.
3. ANCHOR BOLTS SHALL BE 2" X 90" X 6" (50 mm X 2.285 m X 150 mm), WITH TWO HEX NUTS AND TWO FLAT WASHERS PER BOLT.
4. ANCHOR BOLTS SHALL PROJECT 41" (115 mm) ABOVE THE FOUNDATION CAP.
5. CONDUIT SHALL PROJECT 2" (50 mm) ABOVE THE FOUNDATION CAP.
6. THE FOUNDATION HOLE SHALL BE AUGERED AND CLASS "S" (3000 PSI) CONCRETE POURED AGAINST UNDISTURBED COMPACTED EARTH.
7. UNSTABLE FOIL MAY REQUIRE DEEPER FOUNDATION. SEE SPECIFICATIONS.
8. A 25' (7.62 m) COIL OF NO. 4 AWG BARE COPPER CONDUCTOR SHALL BE INSTALLED BEFORE THE CONCRETE IS POURED AND CONNECTED TO THE POLE GROUNDING SCREW IN THE HAND HOLE.
9. FOR INBOARD TENON, WHEN SPECIFIED SEE TENON DETAIL ON T 901.
10. ALL POLES AND MAST ARMS TO BE STRAIGHT AND TRUE.

				T.S. 4-11
ISSUED:	CITY OF TUCSON	STANDARD DETAIL	THE SEAL of PIMA COUNTY ARIZONA	DETAIL NO.
7/89		TYPE 'K' POLE MAST ARM		T 411
REVISED:				
11/04				SHEET 2 OF 2

TS4-11-2.DWG 12/07/00 11:00

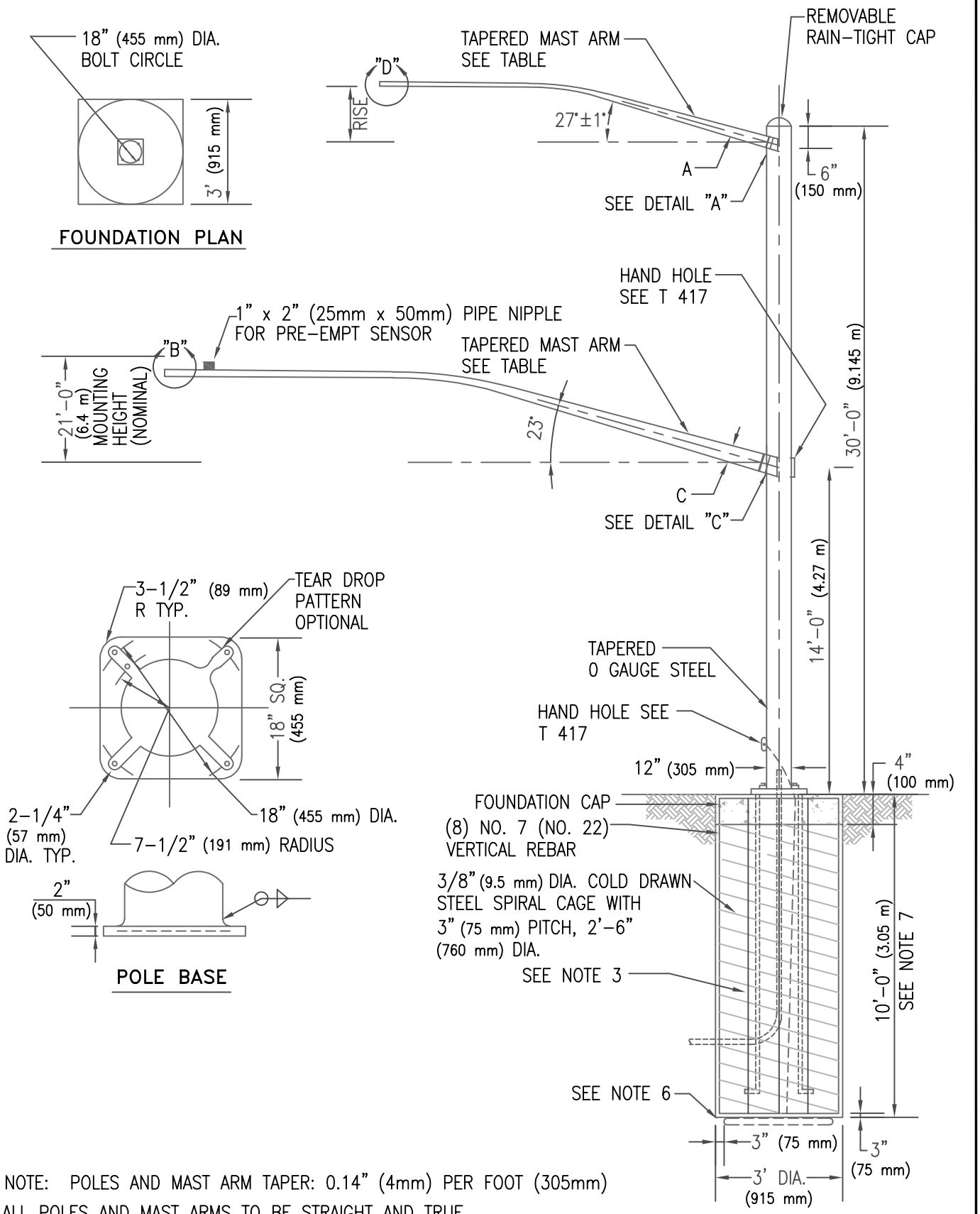

NOTE: POLES AND MAST ARM TAPER: 0.14" (4mm) PER FOOT (305mm)

ALL POLES AND MAST ARMS TO BE STRAIGHT AND TRUE

ISSUED:	STANDARD DETAIL	T.S. 4-12 DETAIL NO.
7/89	TYPE 'Q' POLE MAST ARM	T 412
REVISED: 11/04		SHEET 1 OF 3

CITY OF TUCSON FOUNDED 1775

THE SEAL of PIMA COUNTY ARIZONA

TS4-12-1.DWG 12/07/00 11:01

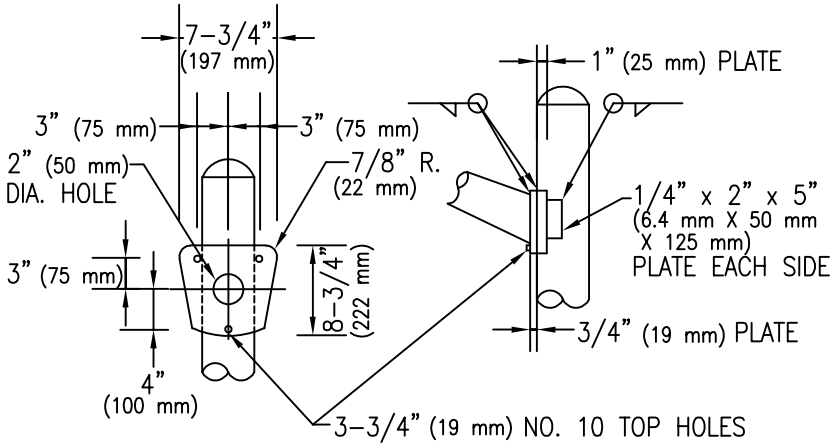

DETAIL "A"

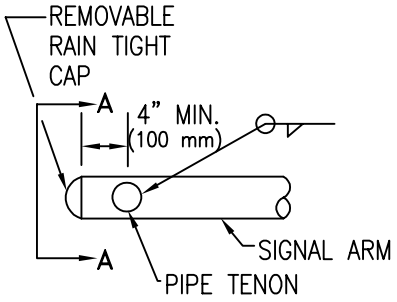

DETAIL "B"

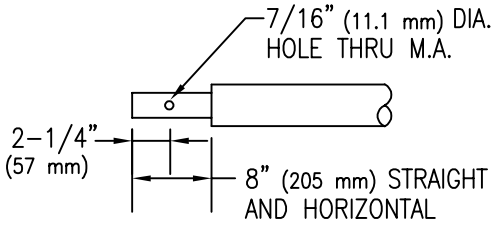

DETAIL "B"

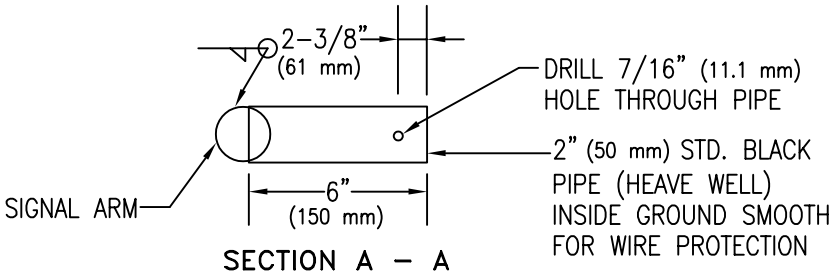

SECTION A – A

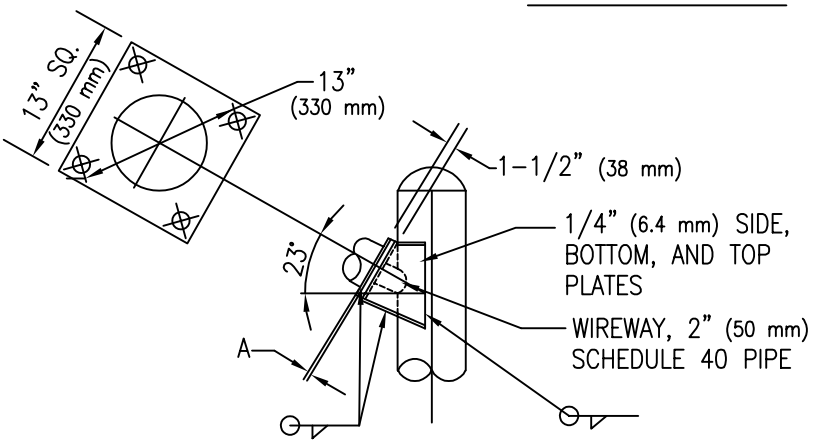

DETAIL "C"

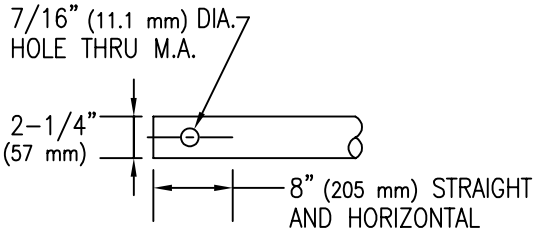

DETAIL "D"

ALL POLES AND MAST ARMS TO BE STRAIGHT AND TRUE

ISSUED:		STANDARD DETAIL		DETAIL NO.
7/89		TYPE 'Q' POLE MAST ARM		T 412
REVISED:				
10/02				SHEET 2 OF 3

TS4-12-2.DWG 12/07/00 11:02

	MAST ARM INFORMATION						
	NOM M.A. LENGTH	LUM. M.A. RISE	M.A. GAUGE	"A" MIN. 11 GA.	"A" MIN. 10 GA.	B	C MIN.
LUMINAIRE	6' (1.833 m)	2'–0" (610 mm)	11 OR 10	3–1/4" (82 mm)	3–3/8" (86 mm)	---	---
LUMINAIRE	8' (2.44 m)	2'–6" (760 mm)	11 OR 10	3–1/2" (89 mm)	3–5/8" (92 mm)	---	---
LUMINAIRE	10' (3.05 m)	3'–4" (1.015 m)	11 OR 10	3–13/16" (96 mm)	3–7/8" (98 mm)	---	---
LUMINAIRE	12' (3.66 m)	4'–3" (1.296 m)	11 OR 10	4–1/6" (104 mm)	4–5/16" (110 mm)	---	---
LUMINAIRE	15' (4.57 m)	4'–9" (1.45 m)	11 OR 10	4–1/4" (108 mm)	4–3/4" (121 mm)	---	---
LUMINAIRE	18' (5.485 m)	5'–9" (1.755 m)	11 OR 10	5–3/4" (146 mm)	5–3/16" (132 mm)	---	---
LUMINAIRE	20' (6.095 m)	5'–9" (1.755 m)	7	5–1/4" (133 mm)	5–1/4" (133 mm)	---	---
SIGNAL	25' (7.62 m)	---	7	---	6" (150 mm)	1" (25 mm)	7" (178 mm)
SIGNAL	30' (9.145 m)	---	7	---	6" (150 mm)	1" (25 mm)	8" (205 mm)
SIGNAL	35' (10.67 m)	---	3	---	6" (150 mm)	1–1/4" (32 mm)	8–11/16" (221 mm)
SIGNAL	40' (12.19 m)	---	3	---	6" (150 mm)	1–1/4" (32 mm)	9–3/8" (239 mm)

NOTES:

1. ALL MATERIALS AND CONSTRUCTION SHALL CONFORM TO THE REQUIREMENTS OF THE STANDARD SPECIFICATIONS.
2. THE POLE SHALL BE 3 GAUGE TAPERED STEEL. ALTERNATE: THE TOP 10' (3.05 m) OF POLE MAY BE 10 OR 11 GAUGE. HOT DIP GALVANIZED FINISH PER ASTM A123.
3. FOUR 1–1/4" (32 mm) – 7 HIGH STRENGTH BOLTS ARE REQUIRED FOR THE SIGNAL MAST ARMS. ASTM A 325.
4. ANCHOR BOLTS SHALL BE 2" X 90" X 6" (50 mm X 2.285 m X 150 mm), WITH TWO HEX NUTS AND TWO FLAT WASHERS PER BOLT.
5. ANCHOR BOLTS SHALL PROJECT 4–1/2" (115 mm) ABOVE THE FOUNDATION CAP.
6. CONDUIT SHALL PROJECT 2" (50 mm) ABOVE THE FOUNDATION CAP.
7. THE FOUNDATION HOLE SHALL BE AUGERED AND CLASS "S" (3000 PSI) CONCRETE POURED AGAINST UNDISTURBED COMPACTED EARTH.
8. UNSTABLE SOIL MAY REQUIRE DEEPER FOUNDATION.
9. A 25' (7.62 m) COIL OF #4 AWG BARE COPPER CONDUCTOR SHALL BE INSTALLED BEFORE THE CONCRETE IS POURED, AND CONNECTED TO POLE GROUNDING SCREW IN THE HAND HOLE.
10. FOR INBOARD TENON WHEN SPECIFIED, SEE TENON DETAIL ON T 901.
11. ALL POLES AND MAST ARMS TO BE STRAIGHT AND TRUE.

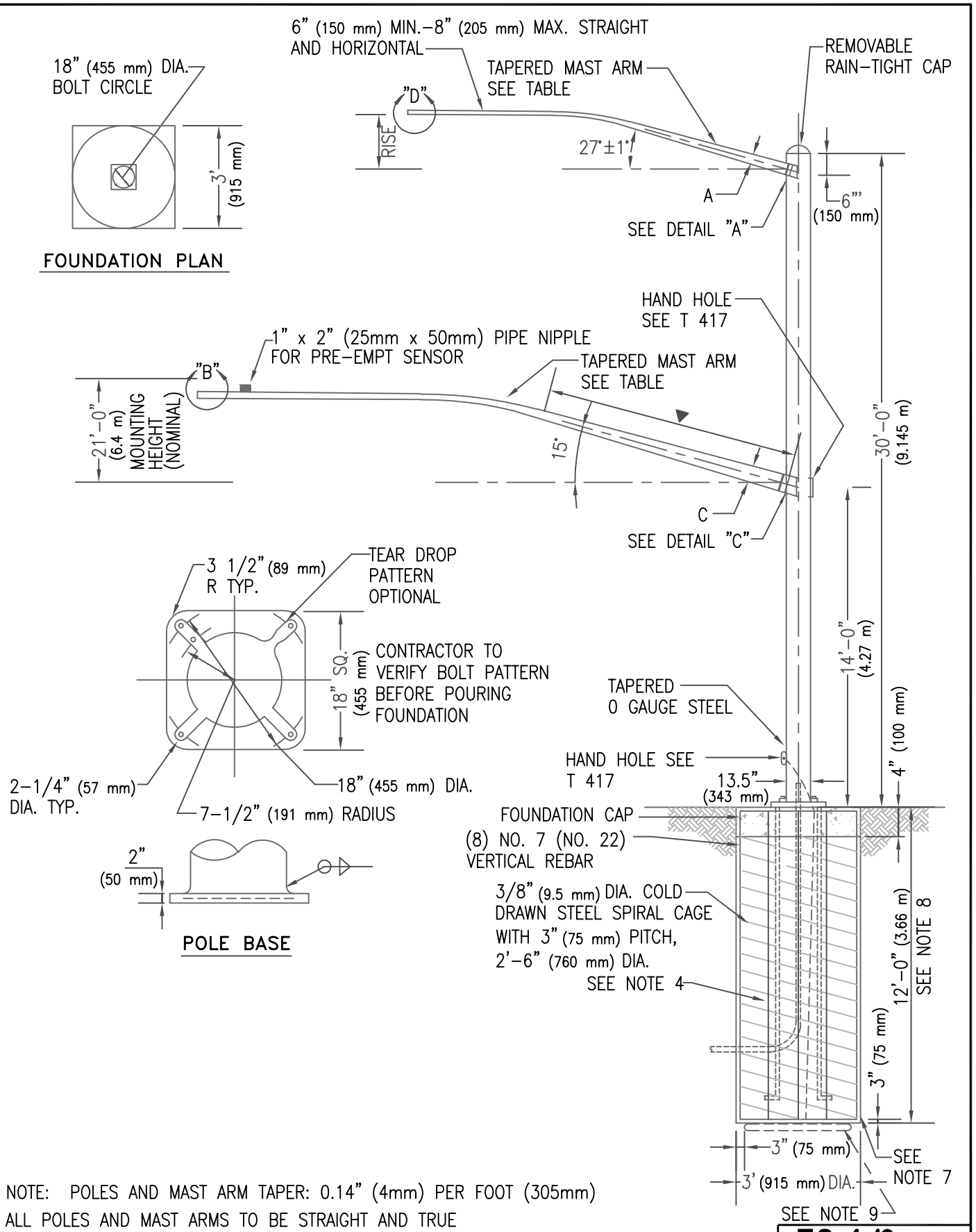

NOTE: POLES AND MAST ARM TAPER: 0.14" (4mm) PER FOOT (305mm)
ALL POLES AND MAST ARMS TO BE STRAIGHT AND TRUE

ISSUED:	CITY OF TUCSON FOUNDED 1775	STANDARD DETAIL	THE SEAL of PIMA COUNTY ARIZONA	T.S. 4-13 DETAIL NO.
7/89		TYPE 'R' POLE MAST ARM		T 413
REVISED: 11/04				SHEET 1 OF 3

TS4–13–1.DWG 12/07/00 11:03

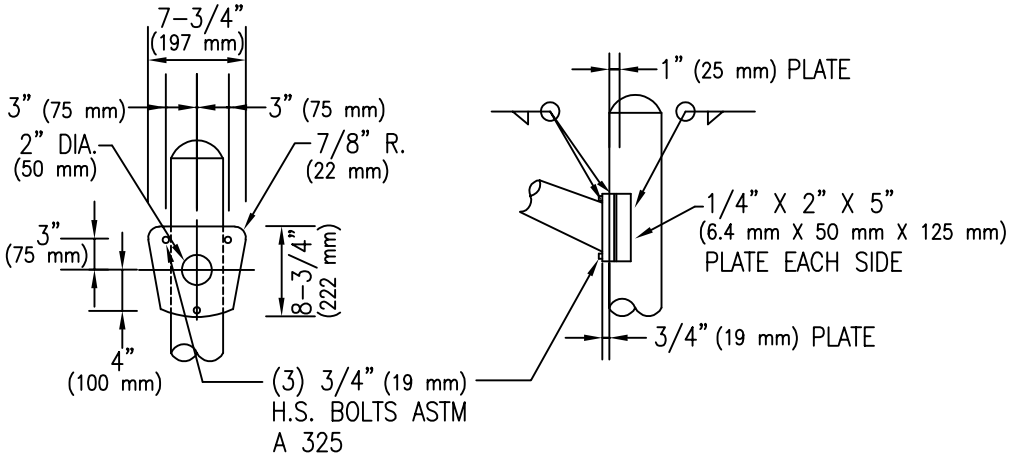

DETAIL "A"

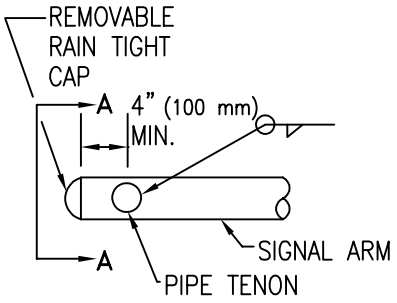

DETAIL "B"

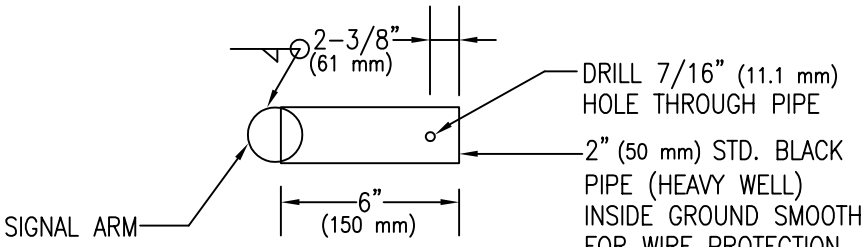

SECTION A – A

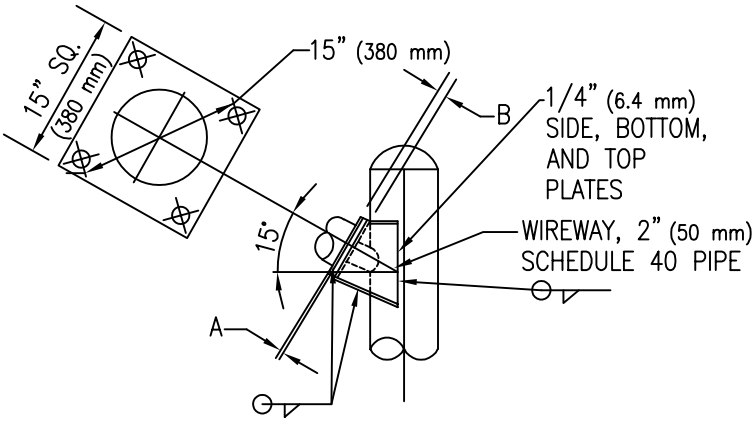

DETAIL "C"

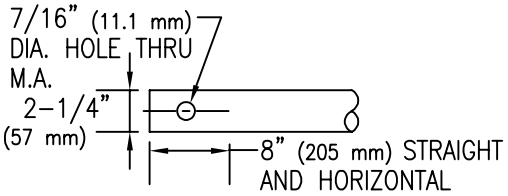

DETAIL "D"

ALL POLES AND MAST ARMS TO BE STRAIGHT AND TRUE

ISSUED:		STANDARD DETAIL		DETAIL NO.
7/89		TYPE 'R' POLE MAST ARM		T 413
REVISED:				
10/02				SHEET 2 OF 3

TS4-13-2.DWG 12/07/00 11:05

	MAST ARM INFORMATION					
	NOM M.A. LENGTH	LUM. M.A. RISE	M.A. GAUGE	"A" (MIN.)		"B" (MIN.)
				11 GA.	10 GA.	
LUMINAIRE	6' (1.833 m)	2'-0" (610 mm)	11 OR 10	3-1/4" (82 mm)	3-3/8" (86 mm)	---
	8' (2.44 m)	2'-6" (760 mm)	11 OR 10	3-1/2" (89 mm)	3-5/8" (92 mm)	---
	10' (3.05 m)	3'-4" (1.015 m)	11 OR 10	3-13/16" (96 mm)	3-7/8" (98 mm)	---
	12' (3.66 m)	4'-3" (1.296 m)	11 OR 10	4-1/6" (104 mm)	4-5/16" (110 mm)	---
	15' (4.57 m)	4'-9" (1.45 m)	11 OR 10	4-1/4" (108 mm)	4-3/4" (121 mm)	---
	18' (5.485 m)	5'-9" (1.755 m)	11 OR 10	5-3/4" (146 mm)	5-3/16" (132 mm)	---
	20' (6.095 m)	5'-9" (1.755 m)	7	5-1/4" (133 mm)	5-1/4" (133 mm)	---
SIGNAL	45' (13.715 m)	---	0 & 3▼	---	---	10-1/16" (256 mm)
	50' (15.24 m)	---	0 & 3▼	---	---	10-3/4" (273 mm)
	55' (16.765 m)	---	0 & 3▼	---	---	11-7/16" (290 mm)

▼FIRST 25' (7.62 m) OF 45' (13.715 m) AND 55' (16.765 m) MAST ARMS AND FIRST 20' (6.095 m) OF 50' (15.24 m) MAST ARMS SHALL BE 10 GAUGE. THE REMAINDER SHALL BE 3 GAUGE.

NOTES:

1. ALL MATERIALS AND CONSTRUCTION SHALL CONFORM TO THE REQUIREMENTS OF THE STANDARD SPECIFICATIONS.
2. THE POLE SHALL BE 3 GAUGE TAPERED STEEL. ALTERNATE: THE TOP 10' (3.05 m) OF POLE MAY BE 10 OR 11 GAUGE. HOT DIP GALVANIZED FINISH PER ASTM A123.
3. FOUR 1-1/4" (32 mm) - 7 HIGH STRENGTH BOLTS ARE REQUIRED FOR THE SIGNAL MAST ARMS. ASTM A 325.
4. ANCHOR BOLTS SHALL BE 2" X 90" X 6" (50 mm X 2.285 m X 150 mm), WITH TWO HEX NUTS AND TWO FLAT WASHERS PER BOLT.
5. ANCHOR BOLTS SHALL PROJECT 4-1/2" (115 mm) ABOVE THE FOUNDATION CAP.
6. CONDUIT SHALL PROJECT 2" (50 mm) ABOVE THE FOUNDATION CAP.
7. THE FOUNDATION HOLE SHALL BE AUGERED AND CLASS "S" (3000 PSI) CONCRETE POURED AGAINST UNDISTURBED COMPACTED EARTH.
8. UNSTABLE SOIL MAY REQUIRE DEEPER FOUNDATION.
9. A 25' (7.62 m) COIL OF #4 AWG BARE COPPER CONDUCTOR SHALL BE INSTALLED BEFORE THE CONCRETE IS POURED, AND CONNECTED TO POLE GROUNDING SCREW IN THE HAND HOLE.
10. FOR INBOARD TENON WHEN SPECIFIED, SEE TENON DETAIL ON T 901.
11. ALL POLES AND MAST ARMS TO BE STRAIGHT AND TRUE.

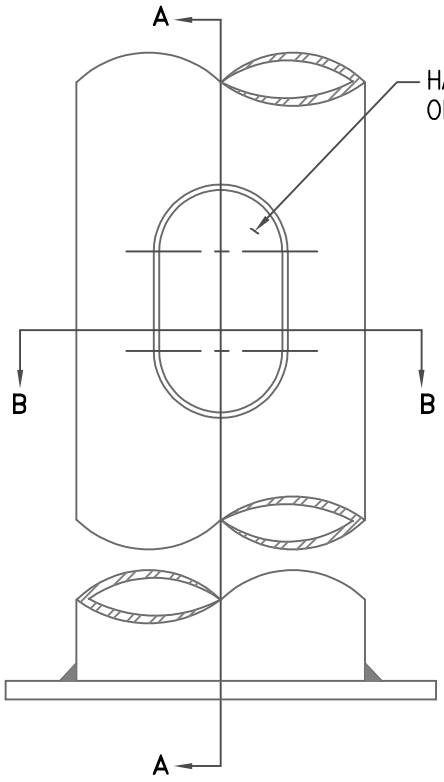

HAND HOLE DETAIL

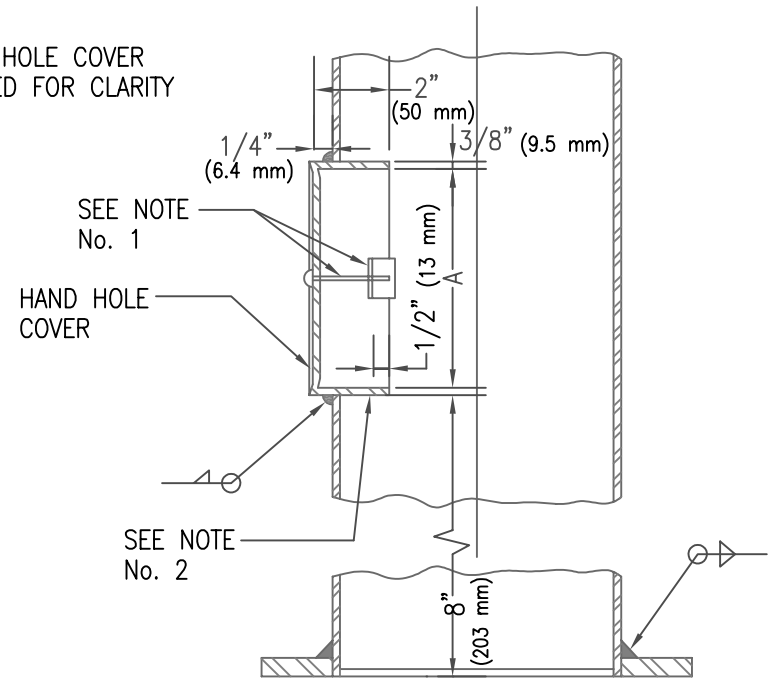

SECTION A–A

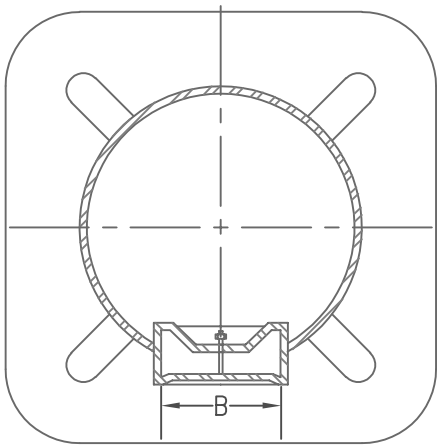

SECTION B–B

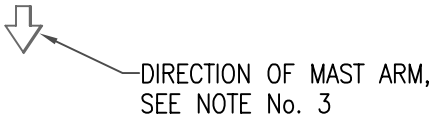

NOTES:

1. HAND HOLE COVER SHALL BE SECURED BY A BRASS MACHINE SCREW AND HOLDING CLEAT, REMOVABLE WITH A STANDARD SCREWDRIVER.
2. POLE GROUND SHALL BE 5/16" (7.9 mm) DIA. N.C. TAPPED HOLE LOCATED AS SHOWN.
3. HAND HOLE SHALL BE ORIENTED SO THAT IT IS ALIGNED WITH THE MAST ARM FOR LOWER HAND HOLE AND OPPOSITE THE MAST ARM FOR UPPER HAND HOLE
4. HAND HOLE MAY BE RECTANGULAR OR OVAL, OF DIMENSIONS SHOWN IN TABLE.
5. ALL POLES AND MAST ARMS TO BE STRAIGHT AND TRUE.

HAND HOLE DIM'S.		
POLE TYPE	A	B
TYPE "A"	5" (125 mm)	3" (75 mm)
ALL OTHERS	6–1/2" (165 mm)	4" (100 mm)

ISSUED:		STANDARD DETAIL		DETAIL NO.
7/89	CITY OF TUCSON FOUNDED 1775	HAND HOLE DETAIL	THE SEAL of PIMA COUNTY ARIZONA	T 417
REVISED: 11/04				SHEET 1 OF 1

TS4–17.DWG 12/07/00 11:09

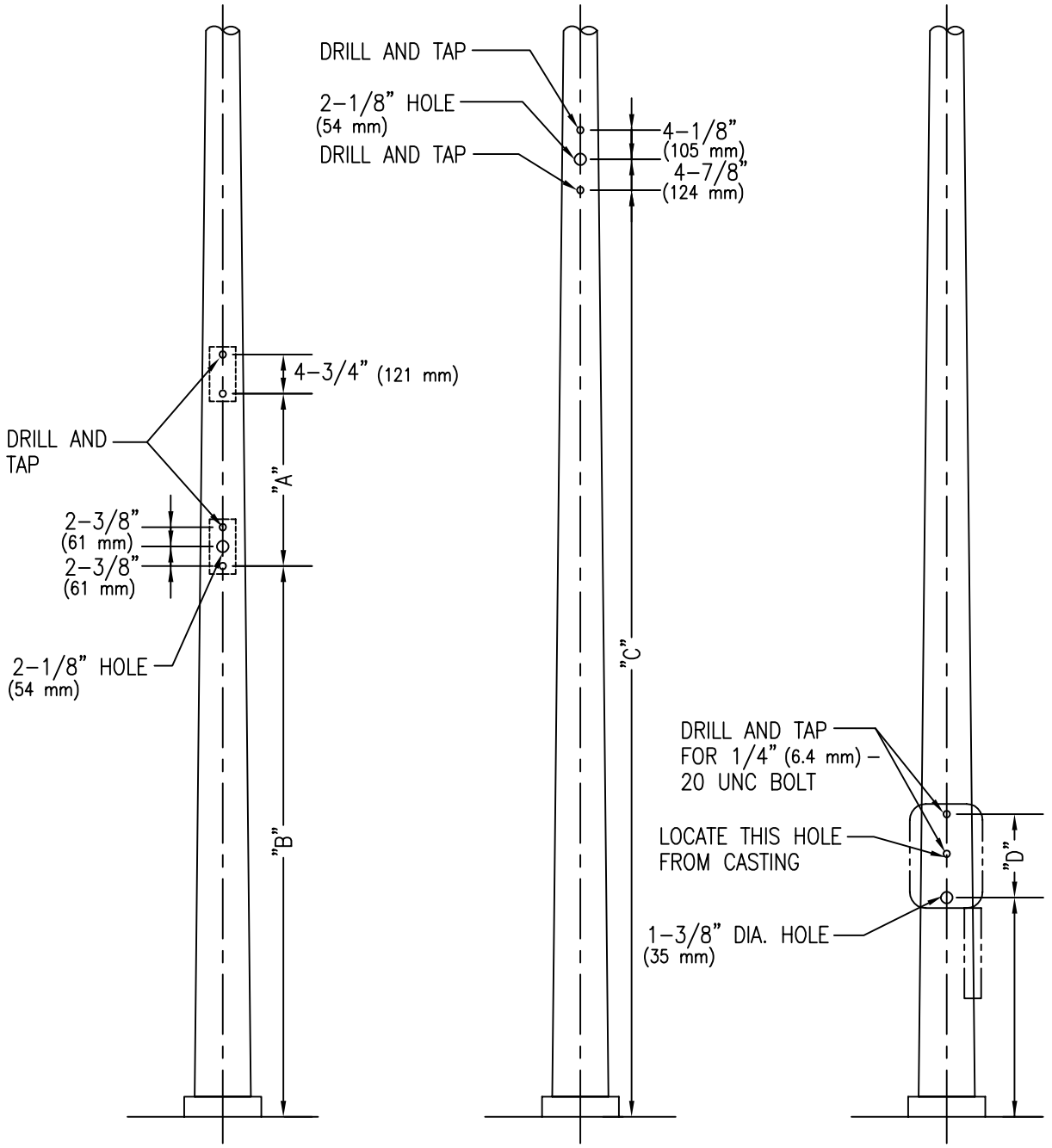

POLE PLATE DRILLING DETAIL

SIDE MOUNT DRILLING DETAIL

PUSH BUTTON DRILLING DETAIL

PUSH BUTTON TO BE INSTALLED
42" (1.07m) - 48" (1.22m)
FROM STANDING GRADE

NOTE: POLES AND MAST ARM TAPER: 0.14" (4mm) PER FOOT (305mm)

ALL POLES AND MAST ARMS TO BE STRAIGHT AND TRUE

ISSUED:		STANDARD DETAIL		DETAIL NO.
7/89		POLE DRILLING DETAIL		T 418
REVISED:				
11/04				SHEET 1 OF 2

TS4-18-1.DWG 12/07/00 11:09

NOTES:

1. DRILLING OF POLE TO BE ORIENTED ACCORDING TO POLE LAYOUT, ON PLANS.
2. WHEN TWO PEDESTRIAN PUSH BUTTONS ARE MOUNTED ON A SMALL DIAMETER POLE, THE LOWER CASTING SHALL HAVE THE BUTTON AT TOP.
3. TOP MOUNTING HOLES TO BE FIELD DRILLED IN ORDER TO ALLOW FOR MANUFACTURING VARIATIONS.
4. MOUNTING BOLTS TO BE 1/2" (13 mm) – 13 UNC X 2" (50 mm) GALVANIZED STEEL BOLTS WITH FLAT WASHER AND LOCK WASHER.
5. ALL POLES AND MAST ARMS TO BE STRAIGHT AND TRUE.

ITEM	DIM. A	DIM. B	DIM. C
PEDESTRIAN SIGNAL	19–5/8" (501 mm)	87" (1.423 m)	87" (1.423 m)
C	34–3/4" (883 mm)	125" (4.575 m)	125" (4.575 m)
J	39" (991 mm)	125" (4.575 m)	125" (4.575 m)
F	48–1/2" (1.233 m)	125" (4.575 m)	125" (4.575 m)

ITEM	DIM. D	
PUSH BUTTON		
TYPE I	11–3/8" (290 mm)	
TYPE II	9–1/4" (235 mm)	

ISSUED:		STANDARD DETAIL		DETAIL NO.
7/89		POLE DRILLING DETAIL		T 418
REVISED:				
10/02				SHEET 2 OF 2

TS4–18–2.DWG 12/07/00 11:10

NOTES:

1. ALL MATERIALS AND CONSTRUCTION SHALL CONFORM TO THE REQUIREMENTS OF THE STANDARD
2. SPECIFICATIONS.
3. THE POLE SHALL BE STEEL WITH HOT DIP GALVANIZED COATING PER ASTM A123.
4. ANCHOR BOLTS SHALL BE 1" X 36" X 4" (25 mm X 915 mm X 100 mm) WITH TWO HEX NUTS AND TWO FLAT WASHERS PER BOLT, OR PER T 450.
5. ANCHOR BOLTS SHALL PROJECT 2-3/4" (70 mm) ABOVE THE FOUNDATION.
6. CONDUIT SHALL PROJECT 2" (50 mm) ABOVE THE FOUNDATION.
7. UNSTABLE SOIL MAY REQUIRE DEEPER FOUNDATIONS.
8. SEE T 1101 FOR PUSH BUTTON DETAILS.
9. SEE T 418 FOR DRILLING DETAILS.
10. A 25' (7.62 m) COIL OF No. 4 AWG BARE COPPER CONDUCTOR SHALL BE INSTALLED BEFORE THE CONCRETE IS POURED AND CONNECTED TO AN ANCHOR BOLT.
    ALL POLES AND MAST ARMS TO BE STRAIGHT AND TRUE.
11. POLE TAPER: 0.14" (4mm) PER FOOT (305 mm).

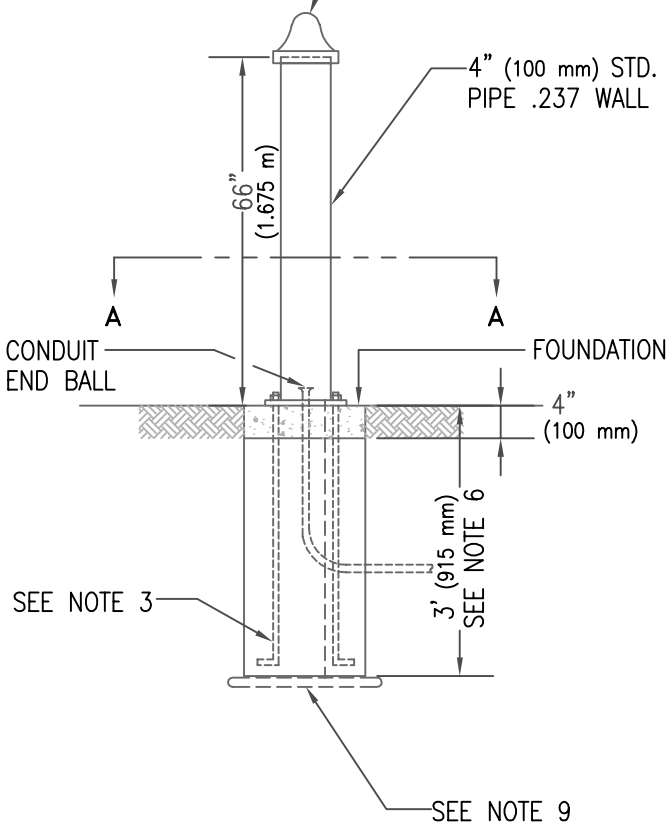

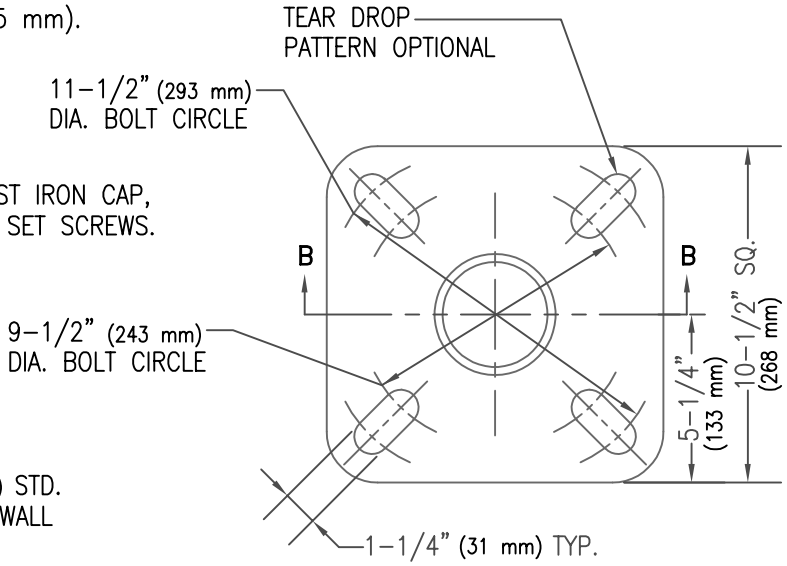

SECTION A – A

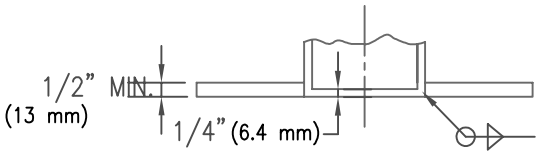

SECTION B – B

BASE PLATE DETAIL

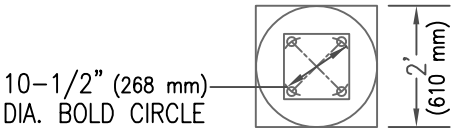

FOUNDATION PLAN

ISSUED:		STANDARD DETAIL		T.S. 4-19 DETAIL NO.
7/89		TYPE I PEDESTRIAN PUSH BUTTON POST		T 419
REVISED:				
11/04				SHEET 1 OF 1

TS4-19.DWG 12/07/00 11:11

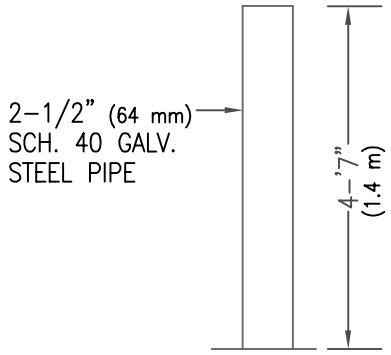

POLE AND BASE TO BE
HOT DIPPED GALVANIZED
ASTM A 123

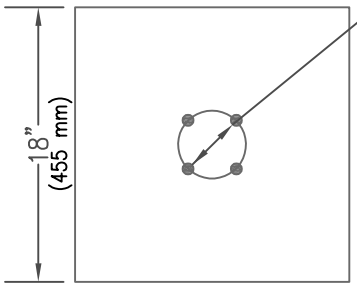

TOP

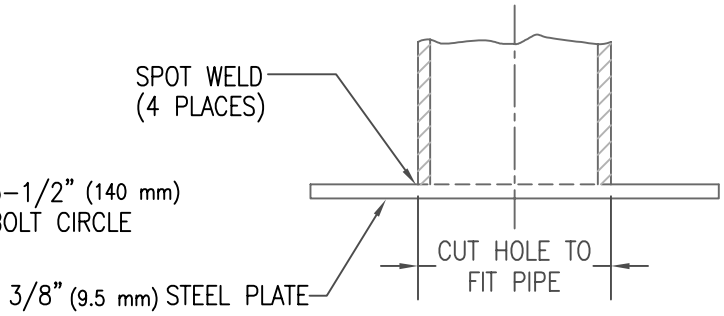

SECTION A-A

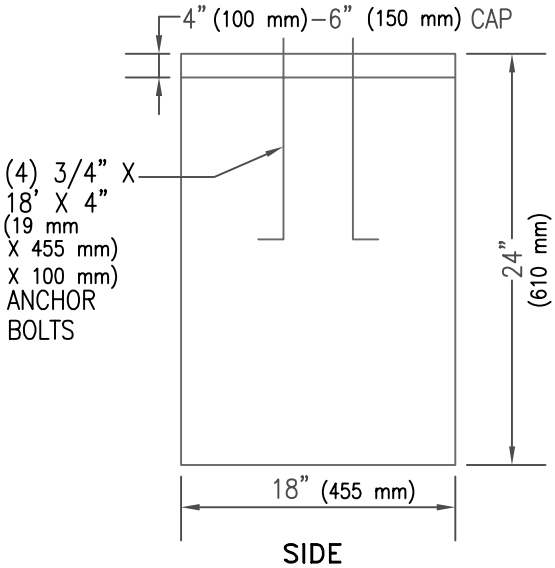

SIDE

FOUNDATION DETAILS

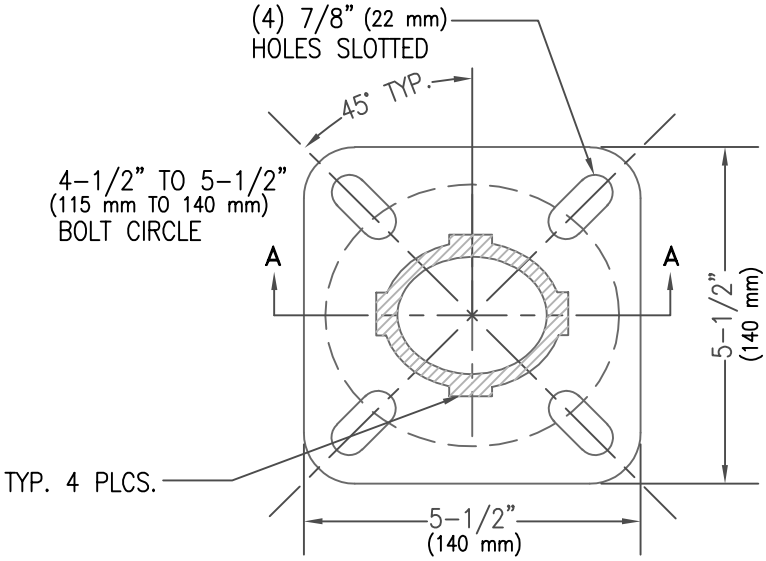

BASE DETAIL

ALL POLES AND MAST ARMS TO BE STRAIGHT AND TRUE

ISSUED:	CITY OF TUCSON FOUNDED 1775	STANDARD DETAIL	THE SEAL of PIMA COUNTY ARIZONA	T.S. 4-20 DETAIL NO.
7/89		TYPE II PEDESTRIAN PUSH BUTTON POST		T 420
REVISED:				
11/04				SHEET 1 OF 1

TS4-20.DWG 12/07/00 11:17

MAST ARM INFORMATION					
LGTH	RISE	GA	"D" MIN.	GA	"D MIN.
12' (3.66 m)	4'-3" (1.296 m)	11	4-15/16" (126 mm)	10	4-5/16" (110 mm)
15' (4.57 m)	4'-9" (1.449 m)	11	5-5/16" (135 mm)	10	4-3/4" (121 mm)
18' (5.484 m)	5'-9" (1.754 m)	11	5-13/16" (147 mm)	10	5-3/16" (132 mm)
20' (6.095 m)	5'-9" (1.754 m)	7	5-1/4" (133 mm)		

ALL POLES AND MAST ARMS TO BE STRAIGHT AND TRUE

NOTE: POLES AND MAST ARM TAPER: 0.14" (4mm) PER FOOT (305mm)

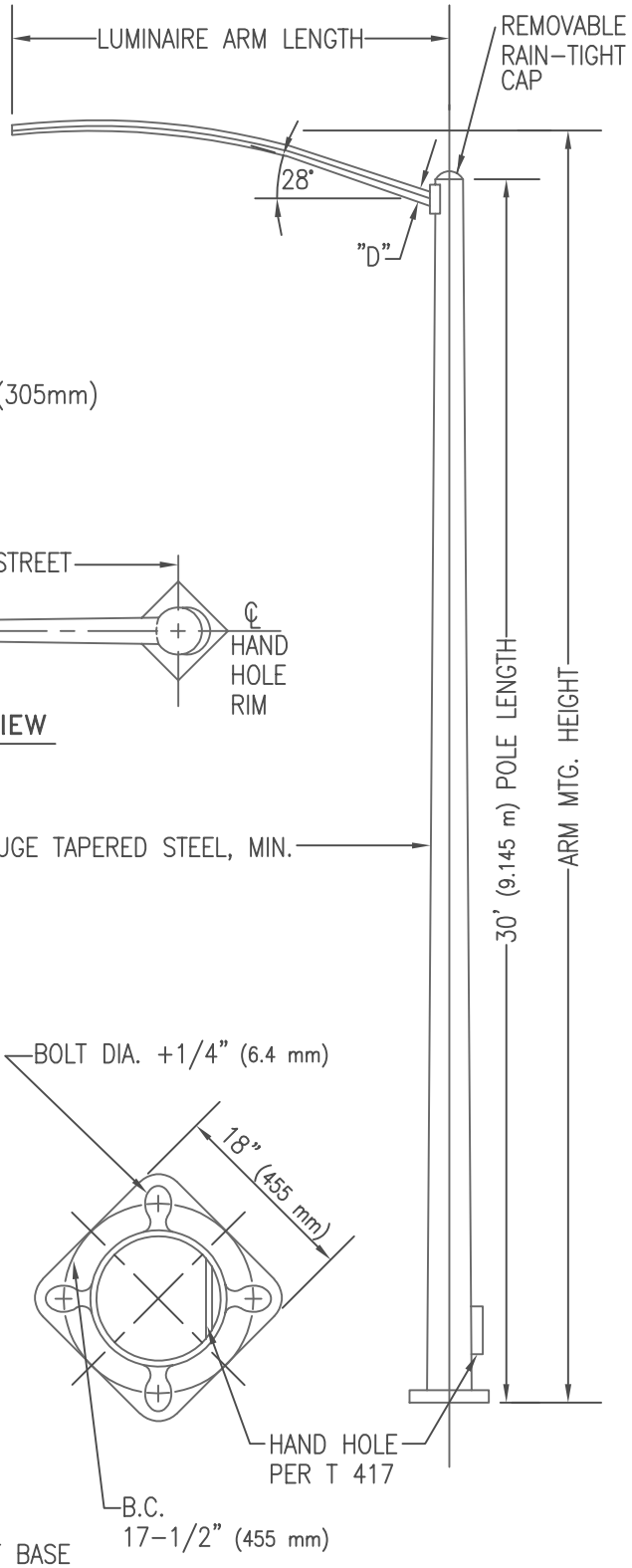

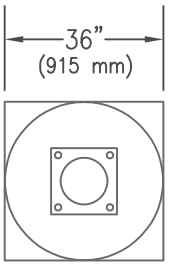

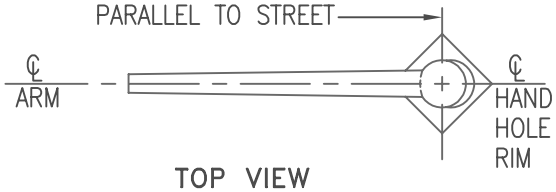

TOP VIEW

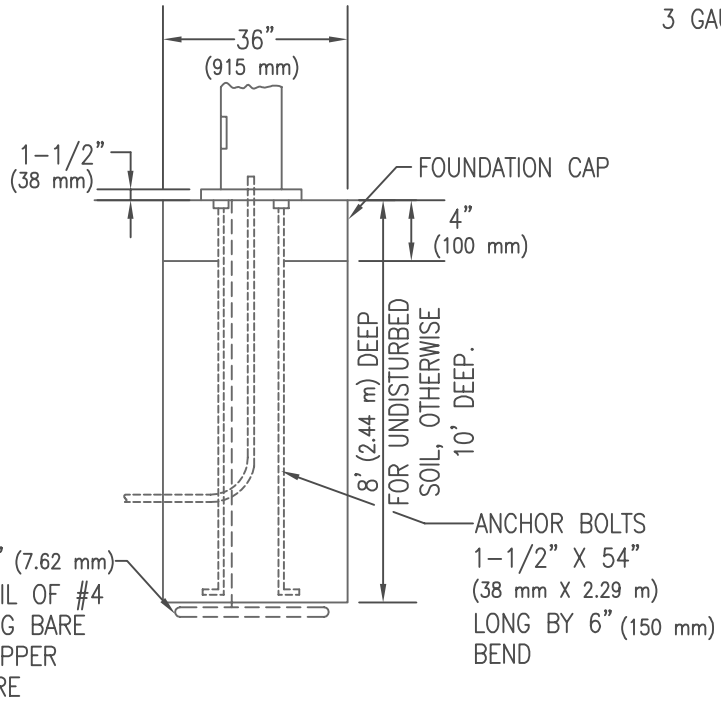

NOTE: POLE TO HAVE A 12-1/2" (318 mm) DIA. AT BASE AND 8" (205 mm) DIA. AT POLE CAP.

ISSUED:	STANDARD DETAIL	T.S. 4-21 DETAIL NO.
7/89	STRAIN POLE AND MAST ARM	T 421
REVISED: 11/04		SHEET 1 OF 1

TS4-21.DWG 12/07/00 11:18

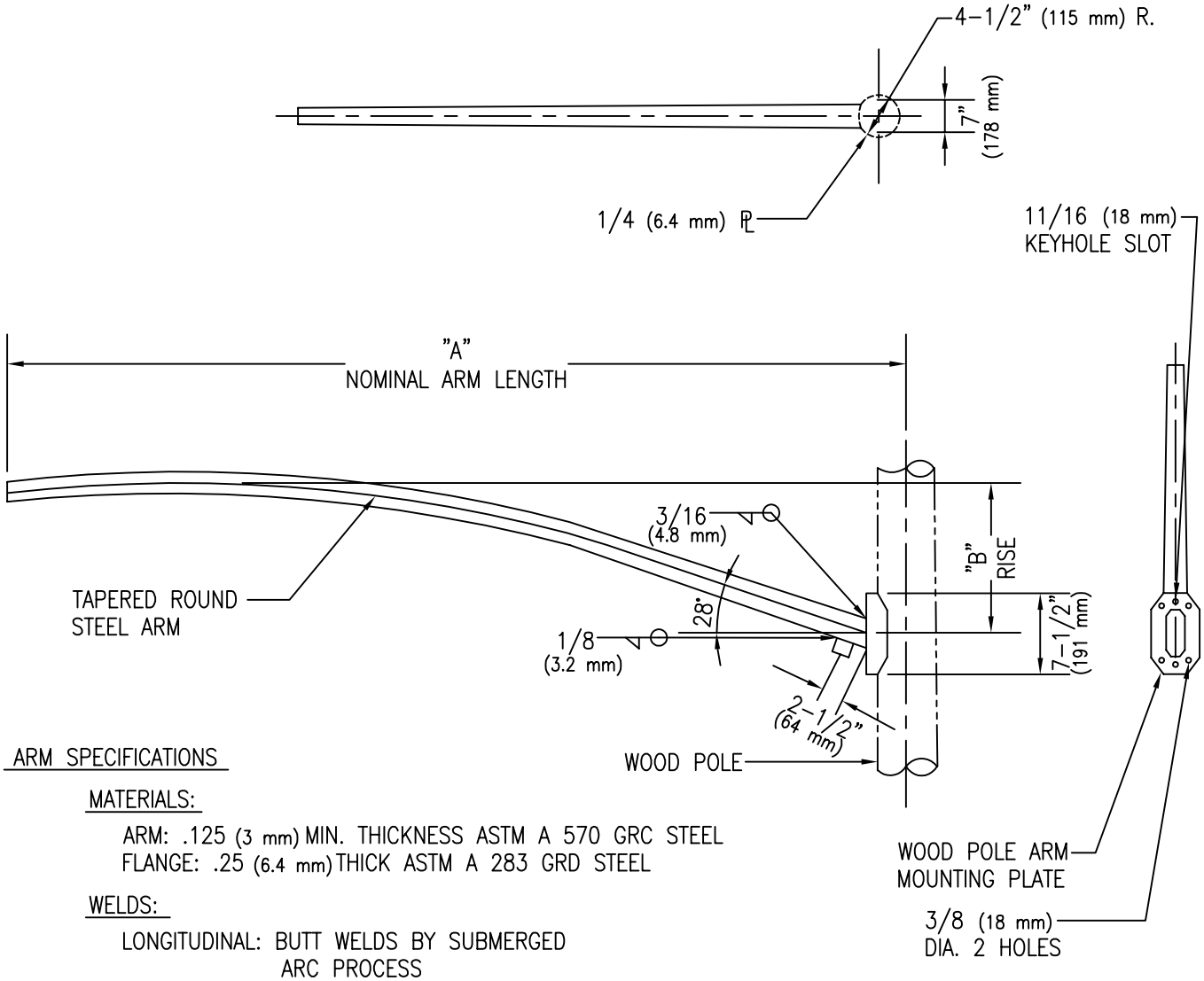

ARM SPECIFICATIONS

MATERIALS:

ARM: .125 (3 mm) MIN. THICKNESS ASTM A 570 GRC STEEL
FLANGE: .25 (6.4 mm) THICK ASTM A 283 GRD STEEL

WELDS:

LONGITUDINAL: BUTT WELDS BY SUBMERGED ARC PROCESS

FINISH:

NOT DIP GALVANIZED

A	END O.D. "BASE O.D." = THICKNESS	B
6'-0" (1.83 m)	2-3/8" X 3-3/8" X .125" (61 mm X 86 mm X 3 mm)	24" (610 mm)
8'-0" (2.44 m)	2-3/8" X 3-3/8" X .125" (61 mm X 86 mm X 3 mm)	36" (914 mm)
10'-0" (3.05 m)	2-3/8" X 3-7/8" X .125" (61 mm X 98 mm X 3 mm)	36" (914 mm)
12'-0" (3.66 m)	2-3/8" X 4-3/16" X .125" (61 mm X 107 mm X 3 mm)	51" (1.295 m)
15'-0" (4.57 m)	2-3/8" X 4-3/4" X .125" (61 mm X 121 mm X 3 mm)	57" (1.448 m)
16'-0" (4.88 m)	2-3/8" X 4-3/4" X .125" (61 mm X 121 mm X 3 mm)	57" (1.448 m)
18'-0" (5.485 m)	2-3/8" X 4-3/4" X .125" (61 mm X 121 mm X 3 mm)	69" (1.753 m)
20'-0" (6.095 m)	2-3/8" X 5-1/4" X .125" (61 mm X 133 mm X 3 mm)	69" (1.753 m)

NOTE: POLES AND MAST ARM TAPER: 0.14" (4mm) PER FOOT (305mm)
ALL POLES AND MAST ARMS TO BE STRAIGHT AND TRUE

ISSUED:	STANDARD DETAIL	DETAIL NO.
7/89	MAST ARM FOR WOOD POLE	T 430
REVISED: 11/04		SHEET 1 OF 1

TS4-30.DWG 12/07/00 11:18

NOTE TO BE USED WITH TS MAST ARMS LONGER THAN 30' (9.145 m) OR WITH SL MAST ARMS LONGER THAN 20' (6.096 m)

NOTES:

1. FOR ADDITIONAL POLE BASE AND FOUNDATION PLAN DETAIL, SEE STD. DTL. No. T 412.
2. A 20' (6.096 m) COIL OF #4 AWG BARE COPPER GROUND WIRE SHALL BE INSTALLED BEFORE THE CONCRETE IS POURED AND CONNECTED TO POLE GROUNDING SCREW IN THE HAND HOLE.

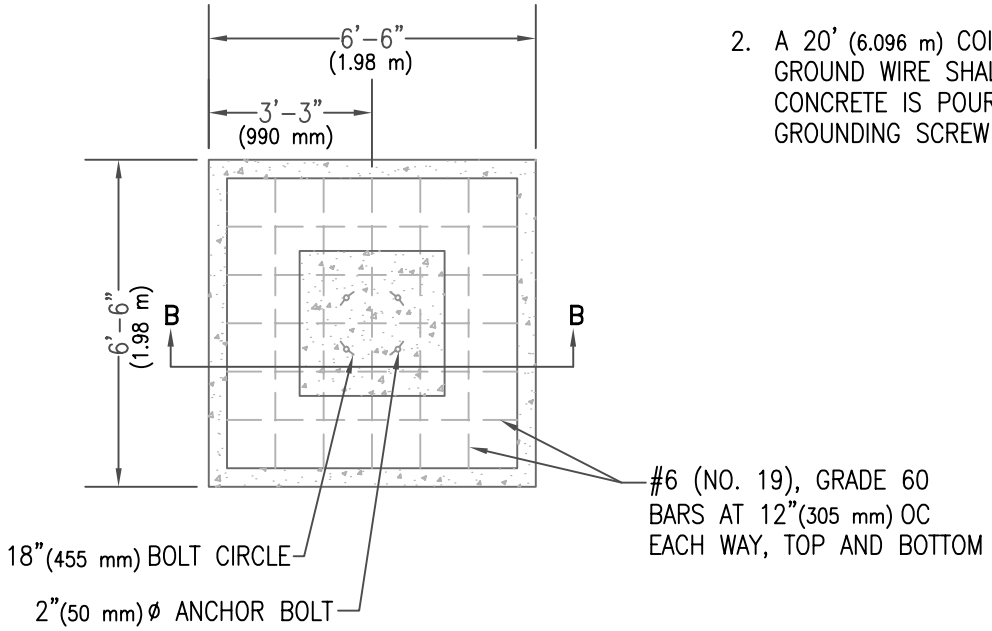

PLAN

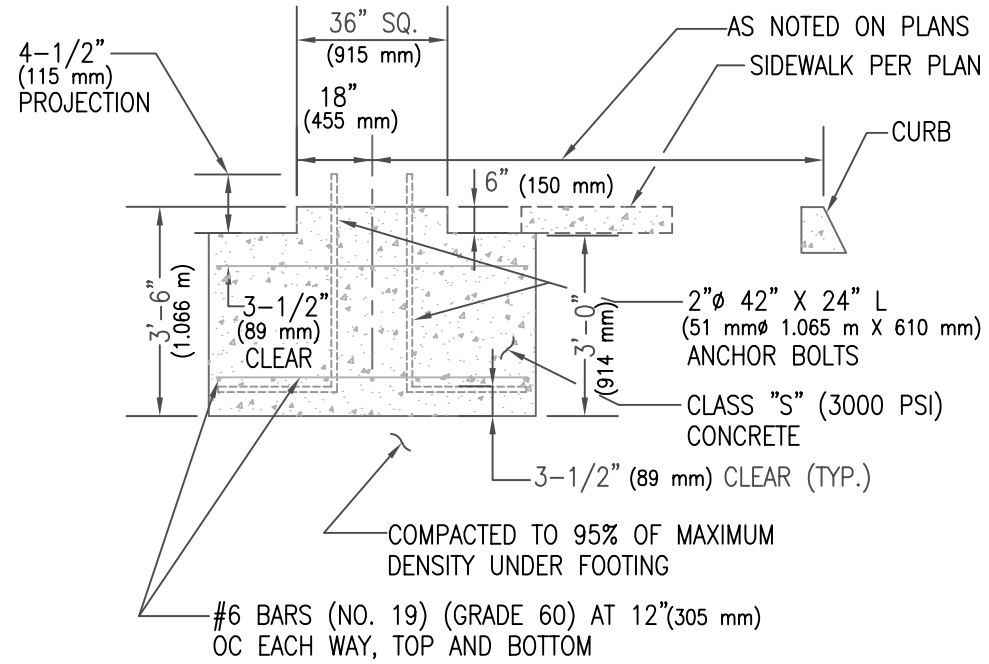

SECTION B-B

ISSUED:		STANDARD DETAIL		DETAIL NO.
7/89	CITY OF TUCSON FOUNDED 1775	SPREAD FOUNDATION (TYPE 'Q' AND 'J' POLES)	THE SEAL of PIMA COUNTY ARIZONA	T 432
REVISED: 10/02				SHEET 1 OF 1

TS4-32.DWG 12/07/00 11:19

NOTES:

1. A 20' (6.095 m) COIL OF #4 AWG BARE COPPER GROUND WIRE SHALL BE INSTALELD BEFORE THE CONCRETE IS POURED AND CONNECTED TO THE GROUNDING SCREW IN THE HANDHOLE

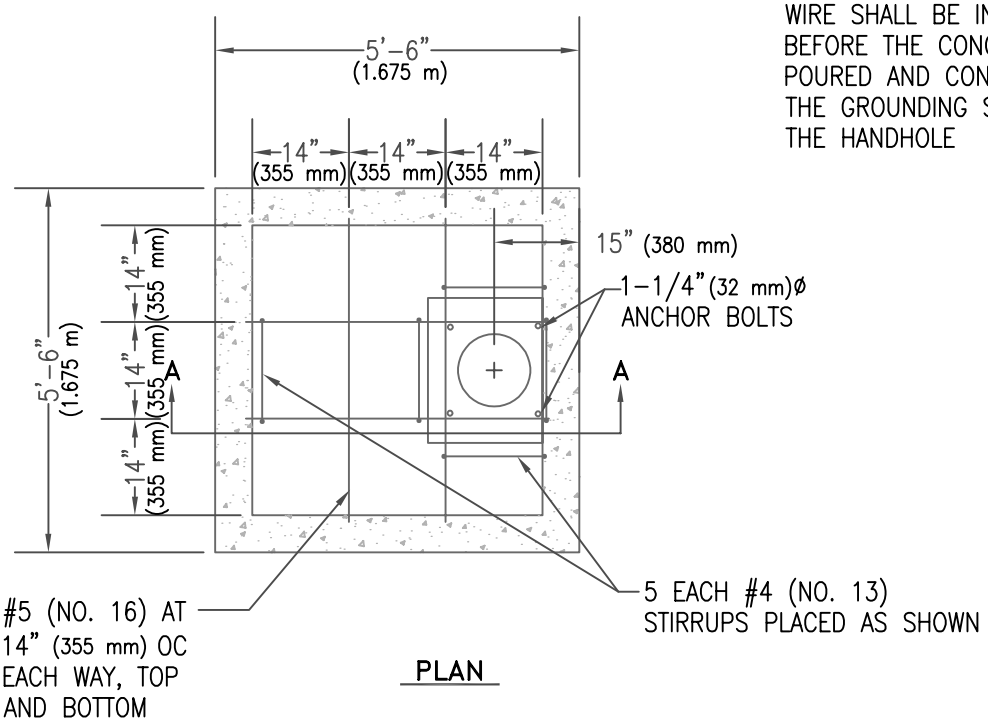

PLAN

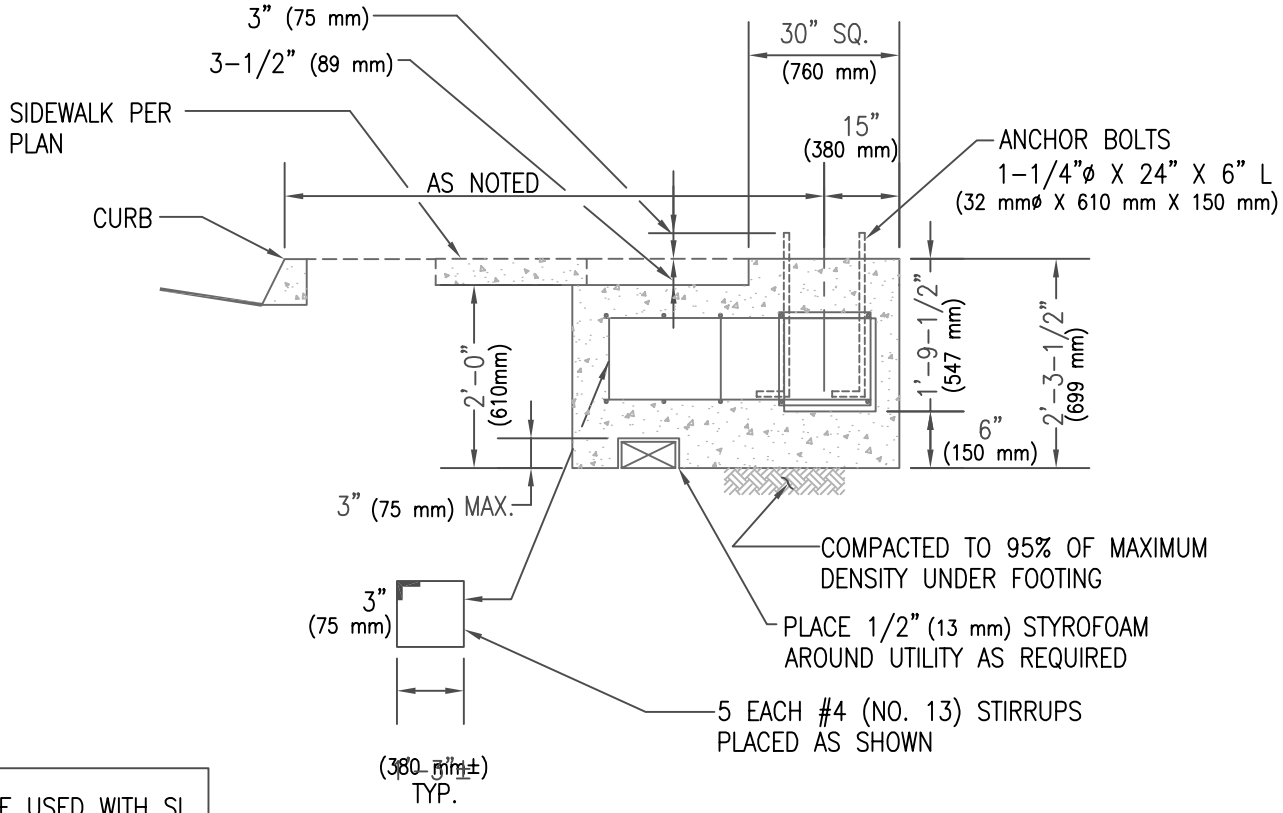

SECTION A-A

NOT TO BE USED WITH SL MAST ARMS LONGER THAN 20' (6.095 m)

ISSUED:		STANDARD DETAIL		DETAIL NO.
7/89		SPREAD FOUNDATION (TYPE 'E','F','G' 1 AND 2 POLES)		T 433
REVISED:				SHEET 1 OF 1
10/02				

TS4-33.DWG 12/07/00 11:19

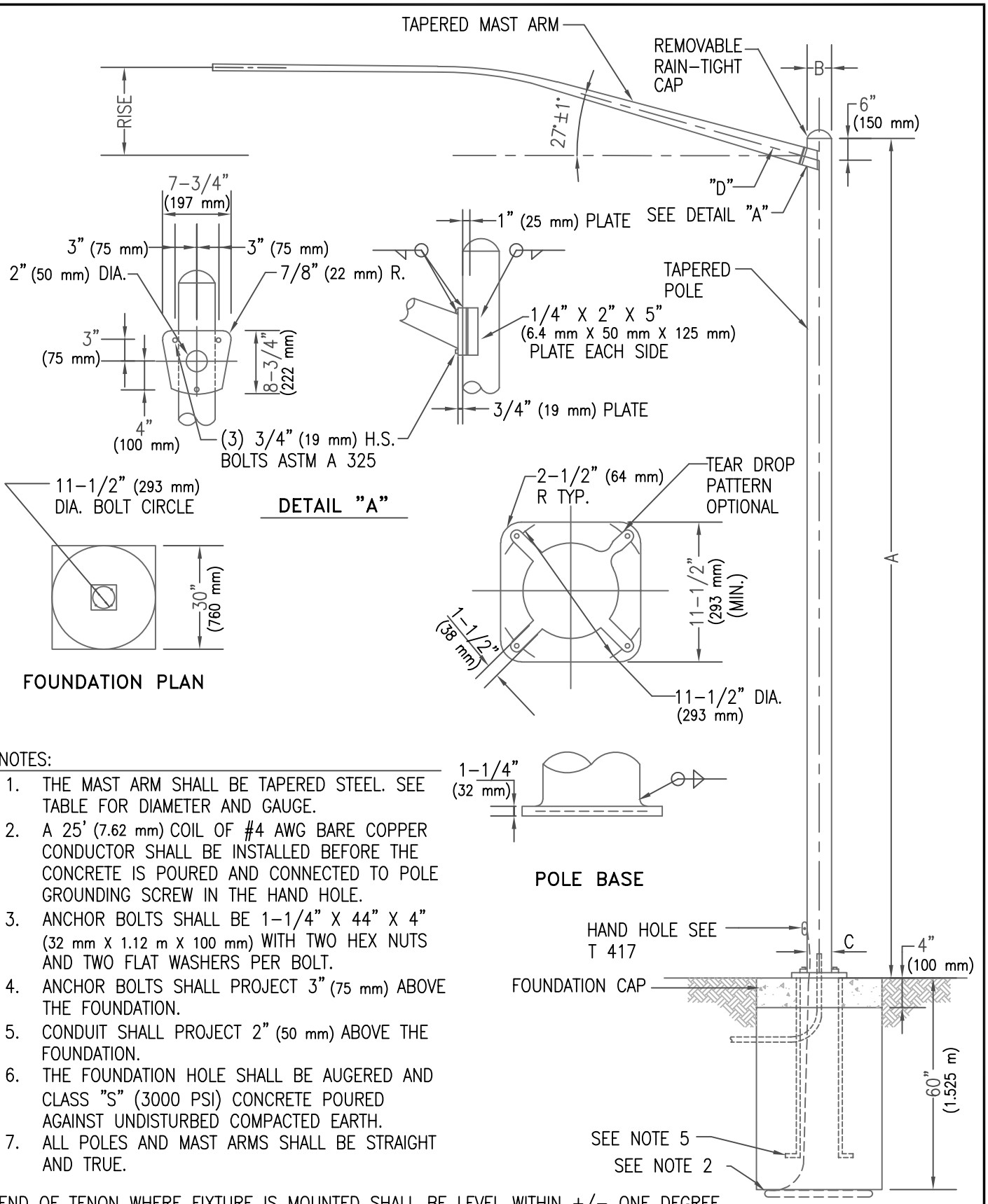

NOTES:

1. THE MAST ARM SHALL BE TAPERED STEEL. SEE TABLE FOR DIAMETER AND GAUGE.
2. A 25' (7.62 mm) COIL OF #4 AWG BARE COPPER CONDUCTOR SHALL BE INSTALLED BEFORE THE CONCRETE IS POURED AND CONNECTED TO POLE GROUNDING SCREW IN THE HAND HOLE.
3. ANCHOR BOLTS SHALL BE 1-1/4" X 44" X 4" (32 mm X 1.12 m X 100 mm) WITH TWO HEX NUTS AND TWO FLAT WASHERS PER BOLT.
4. ANCHOR BOLTS SHALL PROJECT 3" (75 mm) ABOVE THE FOUNDATION.
5. CONDUIT SHALL PROJECT 2" (50 mm) ABOVE THE FOUNDATION.
6. THE FOUNDATION HOLE SHALL BE AUGERED AND CLASS "S" (3000 PSI) CONCRETE POURED AGAINST UNDISTURBED COMPACTED EARTH.
7. ALL POLES AND MAST ARMS SHALL BE STRAIGHT AND TRUE.

END OF TENON WHERE FIXTURE IS MOUNTED SHALL BE LEVEL WITHIN +/- ONE DEGREE
NOTE: POLES AND MAST ARM TAPER: 0.14" (4mm) PER FOOT (305mm)
ALL POLES AND MAST ARMS TO BE STRAIGHT AND TRUE

ISSUED:	STANDARD DETAIL	T.S. 4-44 DETAIL NO.
7/89	TYPE 1 STREET LIGHT POLE	T 444
REVISED: 11/04		SHEET 1 OF 2

TS4-44-1.DWG 12/07/00 11:21

POLE SHAFT DATA

ARM LENGTH	CONSTRUCTION	"A"	"B"	"C"	GAUGE
6'–20' (1.83 m–6.095 m)	SINGLE ARM	30' (9.145 m)	3–7/8" (98 mm)	8" (205 mm)	10
6'–20' (1.83 m–6.095 m)	TWIN ARM	30' (9.145 m)	3–7/8" (98 mm)	8" (205 mm)	10
6'–20' (1.83 m–6.095 m)	SINGLE ARM	35' (10.67 m)	3–7/8" (98 mm)	8–11/16" (227 mm)	10
6'–20' (1.83 m–6.095 m)	TWIN ARM	35' (10.67 m)	3–7/8" (98 mm)	8–11/16" (227 mm)	7

MAST ARM INFORMATION

LENGTH	RISE	GAUGE	"D" MIN.	GAUGE	"D" MIN.
6' (1.83 m)	2'–0" (610 mm)	11	3–1/4" (82 mm)	10	3–3/8" (86 mm)
8' (2.44 m)	2'–6" (760 mm)	11	3–1/2" (89 mm)	10	3–5/8" (92 mm)
10' (3.05 m)	3'–8" (1.118 m)	11	3–13/16" (96 mm)	10	3–7/8" (98 mm)
12' (3.66 m)	4'–3" (1.296 m)	11	4–1/16" (104 mm)	10	4–5/16" (110 mm)
15' (4.57 m)	4'–9" (1.45 m)	11	4–1/4" (108 mm)	10	4–3/4" (121 mm)
18' (5.485 m)	5'–9" (1.755 m)	11	5–3/4" (146 mm)	10	5–3/16" (132 mm)
20' (6.095 m)	5'–9" (1.755 m)	7	5–1/4" (133 mm)	7	5–1/4" (133 mm)

MINIMUM POLE SPECIFICATIONS

MATERIAL

BASE PLATE AND FLANGES: ASTM. A–36 STEEL.
SHAFT: STEEL OF 48,000 P.S.I. MINIMUM YIELD AFTER FABRICATION.
PIPE: ASTM A–53
ANCHOR BOLTS: ASTM A–307

WELDS: (ALL BUTT WELDS TO BE GROUND FLUSH WITH BASE METAL)

BASE PLATE AND FLANGES: ASTM. A–36 STEEL.
SHAFT: STEEL OF 48,000 P.S.I. MINIMUM YIELD AFTER FABRICATION.
PIPE: ASTM A–53
ANCHOR BOLTS: ASTM A–307

FINISH HOT DIP GALVANIZED AS PER ASTM A123

POLES SHALL BE DESIGNED FOR 80 MPH WIND AASHTO WITH 1.2 SQ. FT. (30 mm) EPA AND 53 LBS. FIXTURES.

POLE SHALL BE SUPPLIED WITH 6–1/2" X 4" (165 mm X 100 mm) HANDHOLE, HANDHOLE COVER, POLE TOP, AND 2–PIECE REMOVABLE BASE COVER.

ALL POLES AND MAST ARMS TO BE STRAIGHT AND TRUE.

ISSUED:		STANDARD DETAIL		DETAIL NO.
7/89	CITY OF TUCSON FOUNDED 1775	TYPE 1 STREET LIGHT POLE	THE SEAL of PIMA COUNTY ARIZONA	T 444
REVISED: 10/02				SHEET 2 OF 2

TS4–44–2.DWG 12/07/00 11:21

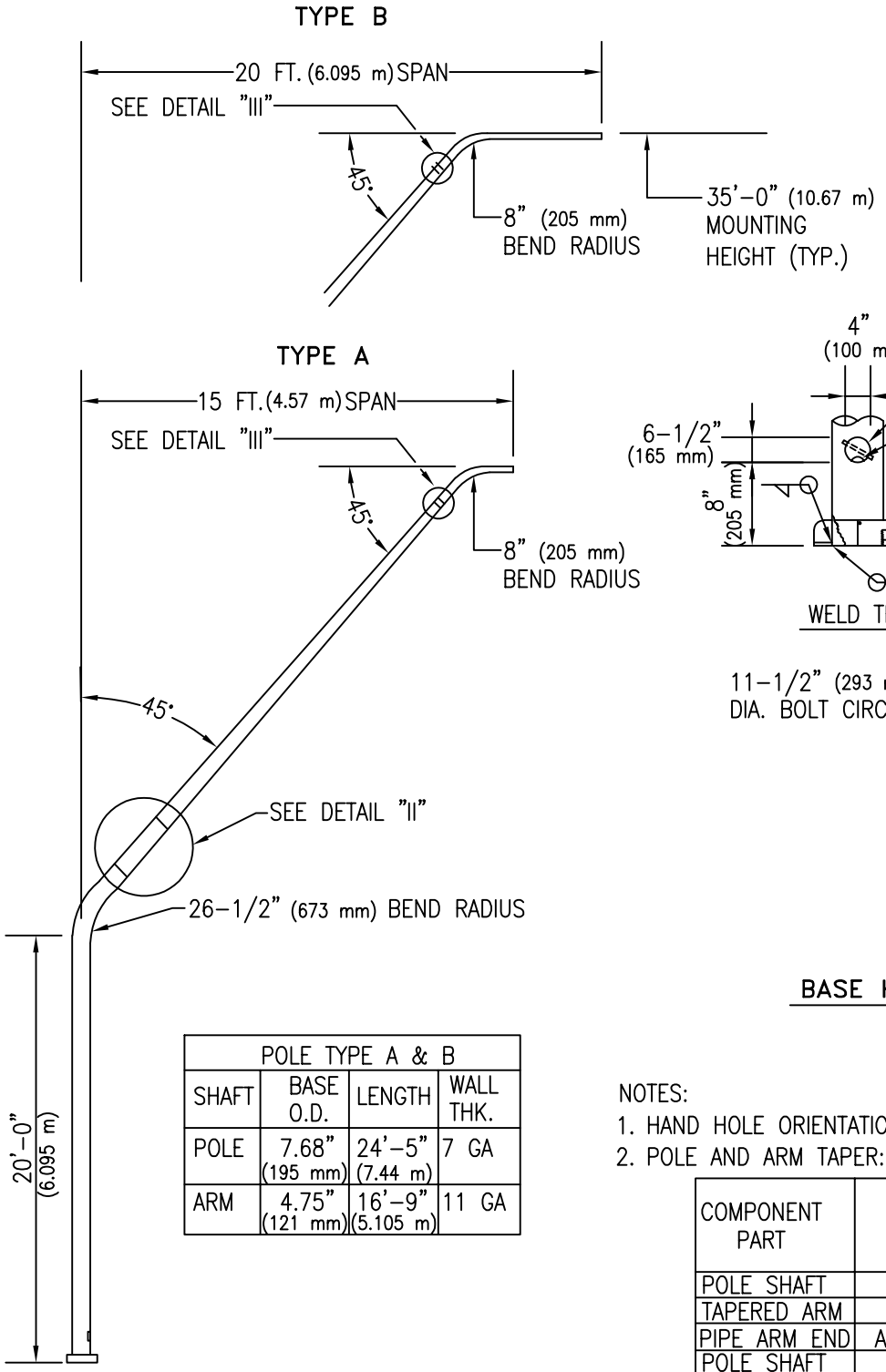

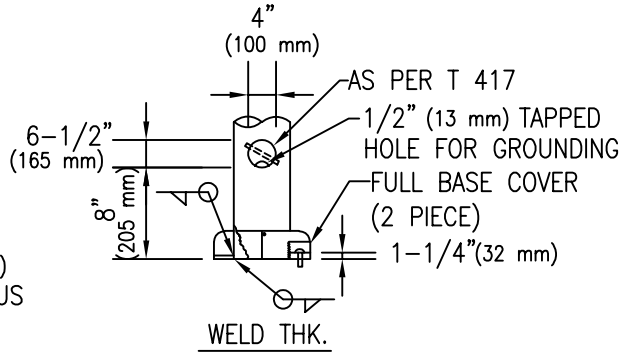

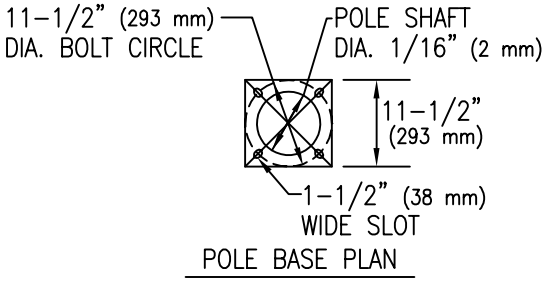

BASE HAND HOLE DETAIL

POLE TYPE A & B			
SHAFT	BASE O.D.	LENGTH	WALL THK.
POLE	7.68" (195 mm)	24'-5" (7.44 m)	7 GA
ARM	4.75" (121 mm)	16'-9" (5.105 m)	11 GA

NOTES:

1. HAND HOLE ORIENTATION: 0° TO ARM
2. POLE AND ARM TAPER: .14" (4 mm) PER FOOT (305 mm).

COMPONENT PART	ASTM	MIN. YIELD (KSI)
POLE SHAFT	A 395 GR.A	35
TAPERED ARM	A 395 GR.A	35
PIPE ARM END	A 313 OR EQUIV.	35
POLE SHAFT	A 36	35
POLE SHAFT	A 301	35
POLE SHAFT	A 123 SHAFTS A 133 ACCESSORIES	M.A.

NOTE: END OF TENON WHERE FIXTURE IS MOUNTED SHALL BE LEVEL WITHIN +/- ONE DEGREE

ISSUED:	STANDARD DETAIL	T.S. 4-44 DETAIL NO.
7/89	TYPE 2 STREET LIGHT POLE	T 445
REVISED: 11/04		SHEET 1 OF 2

TS4-45-1.DWG 12/07/00 11:24

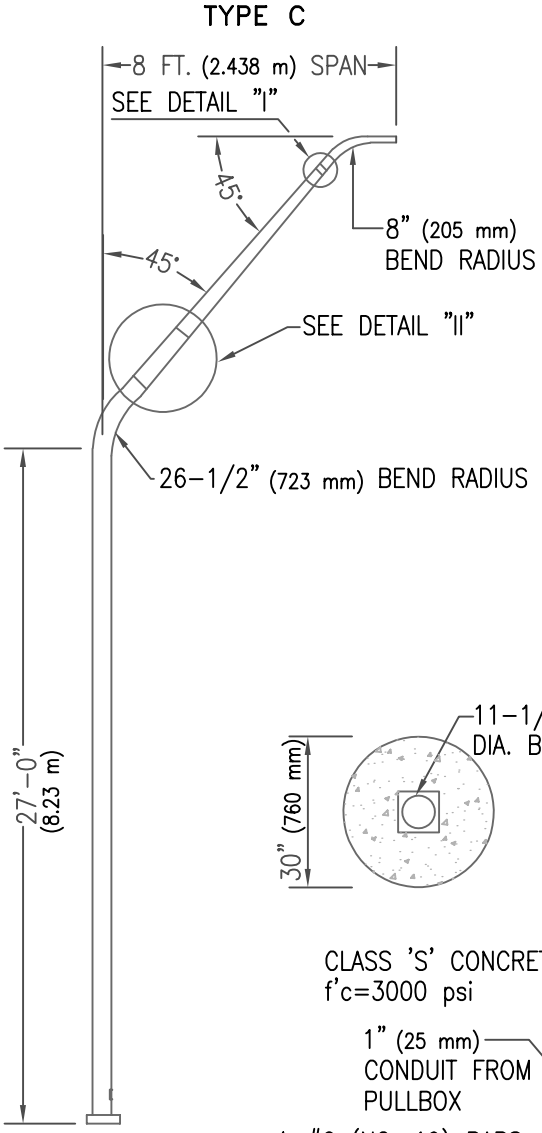

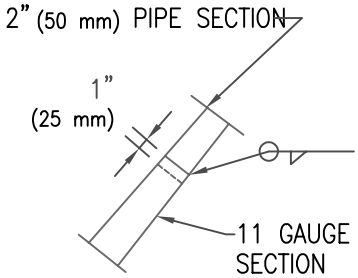

DETAIL "I"

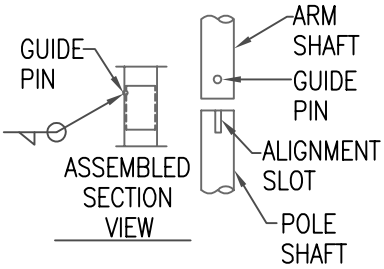

DETAIL "II"

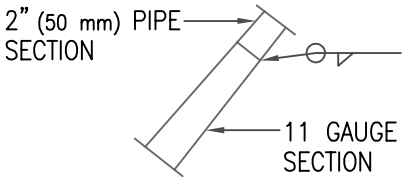

DETAIL "III"

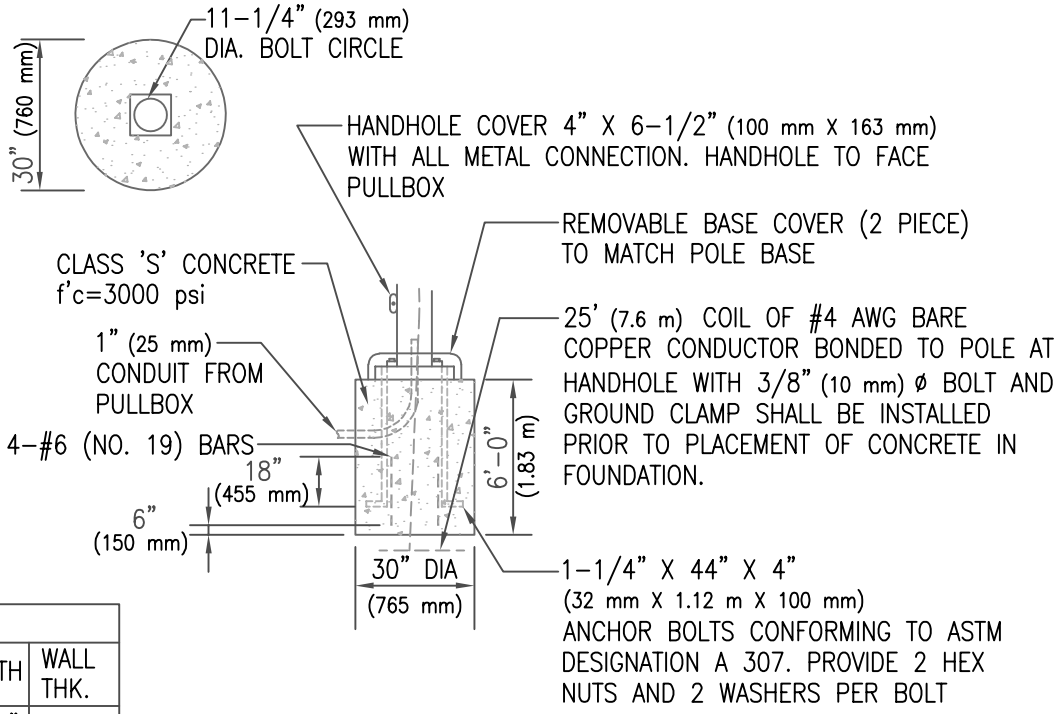

POLE FOUNDATION (TYP)

POLE TYPE C			
SHAFT	BASE O.D.	LENGTH	WALL THK.
POLE	7.62" (194 mm)	31'-2" (9.5 m)	7 GA
ARM	3.72" (94 mm)	7'-5" (2.26 m)	11 GA

NOTE: CENTER OF POLE FOUNDATION TYPICALLY 8'-6" (2.59 m) FROM FACE OF CURB FOR TYPE 'A' & 'B'. CONTRACTOR SHALL VERIFY LOCATION WITH INSPECTOR PRIOR TO EXCAVATING FOUNDATION.

ISSUED:	STANDARD DETAIL	DETAIL NO.
7/89	TYPE 2 STREET LIGHT POLE	T 445
REVISED: 11/04		SHEET 2 OF 2

TS4-45-2.DWG 12/07/00 11:26

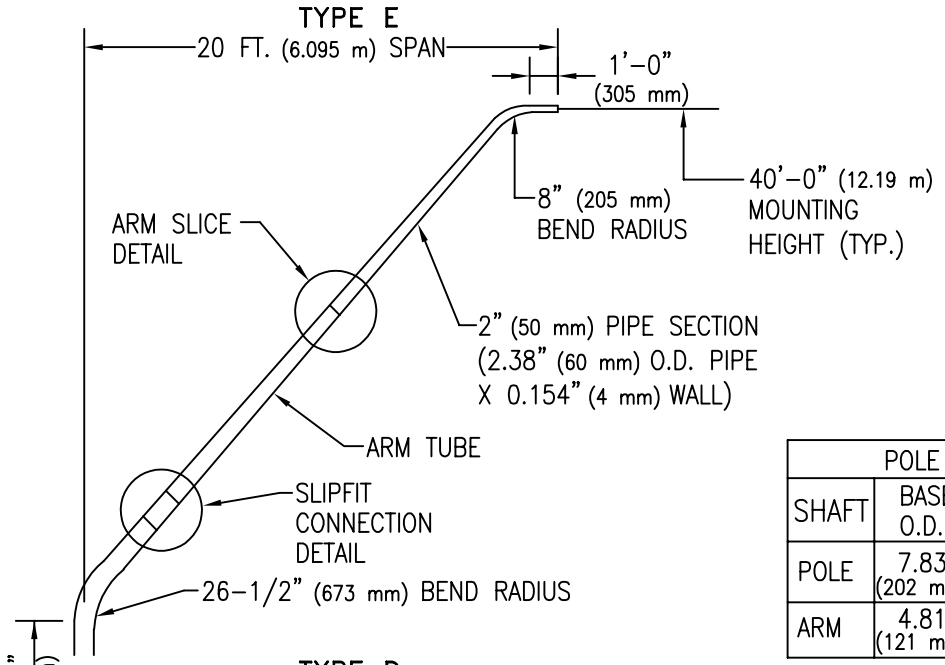

POLE TYPE E			
SHAFT	BASE O.D.	LENGTH	GAUGE
POLE	7.83" (202 mm)	25.00' (7.62 m)	7 GA
ARM	4.81" (121 mm)	17.17' (2.26 m)	11 GA

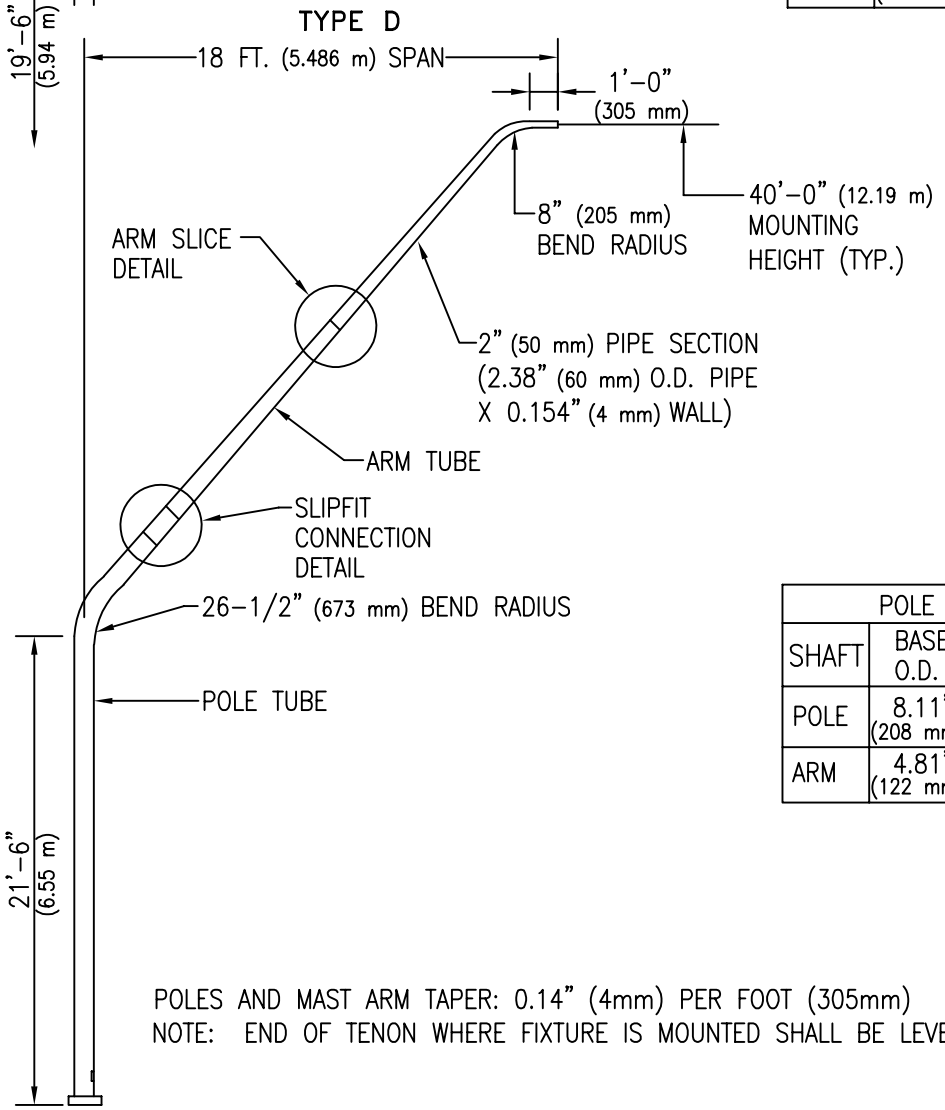

POLE TYPE D			
SHAFT	BASE O.D.	LENGTH	GAUGE
POLE	8.11" (208 mm)	27.00' (8.23 m)	7 GA
ARM	4.81" (122 mm)	17.17' (5.23 m)	11 GA

POLES AND MAST ARM TAPER: 0.14" (4mm) PER FOOT (305mm)
NOTE: END OF TENON WHERE FIXTURE IS MOUNTED SHALL BE LEVEL WITHIN +/- ONE DEGREE

ISSUED:	STANDARD DETAIL	T.S. 4-46 DETAIL NO.
7/95	STREET LIGHT POLE TYPE D AND E	T 446
REVISED: 11/04		SHEET 1 OF 2

TS4-46-1.DWG 12/07/00 11:53

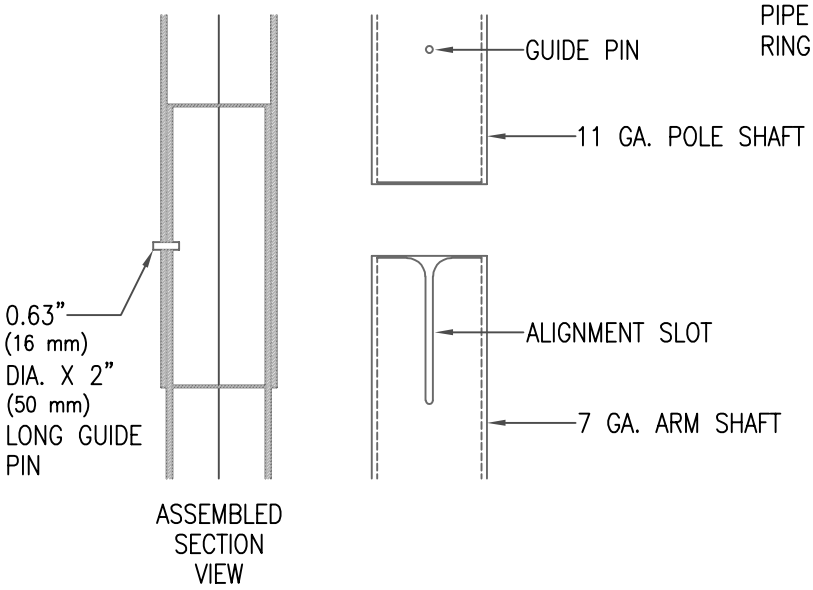

SLIPFIT CONNECTION DETAIL

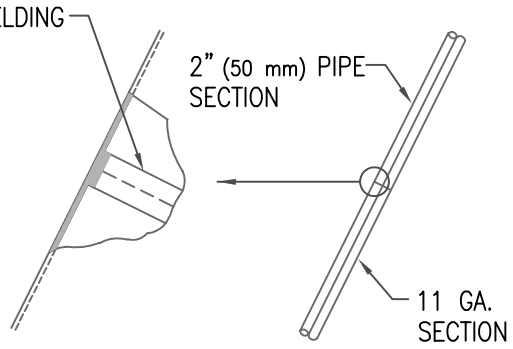

ARM SPLICE DETAIL

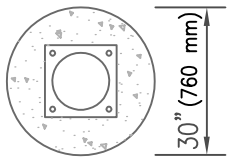

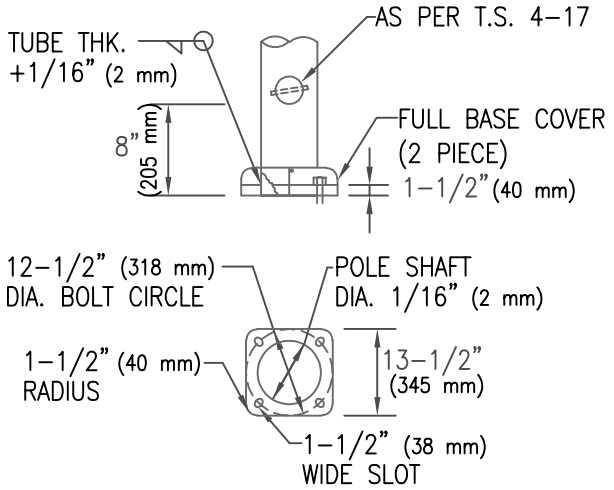

BASE & HANDHOLE DETAIL

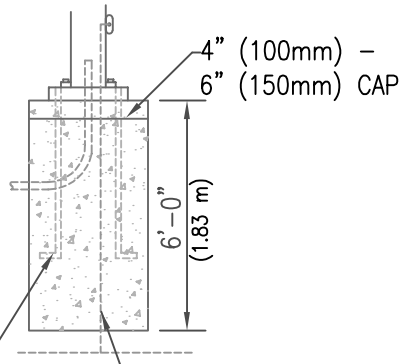

1-1/4" X 44" X 4"
(32 mm X 1.12 m X 100 mm)
ANCHOR BOLTS CONFORMING
TO ASTM DESIGNATION: A-307

25' (7.6m) COIL OF NO. 4 AWG BARE COPPER CONDUCTOR SHALL BE INSTALLED PRIOR TO PLACEMENT OF CONCRETE IN FOUNDATION. CONNECT CONDUCTOR TO THE POLE'S GROUNDING SCREW IN THE HAND HOLE.

POLE FOUNDATION (TYP)

ISSUED:		STANDARD DETAIL		DETAIL NO.
7/95	CITY OF TUCSON FOUNDED 1775	STREET LIGHT POLE TYPE D AND E	THE SEAL of PIMA COUNTY ARIZONA	T 446
REVISED:				
10/02				SHEET 2 OF 2

TS4-46-2.DWG 12/07/00 11:54

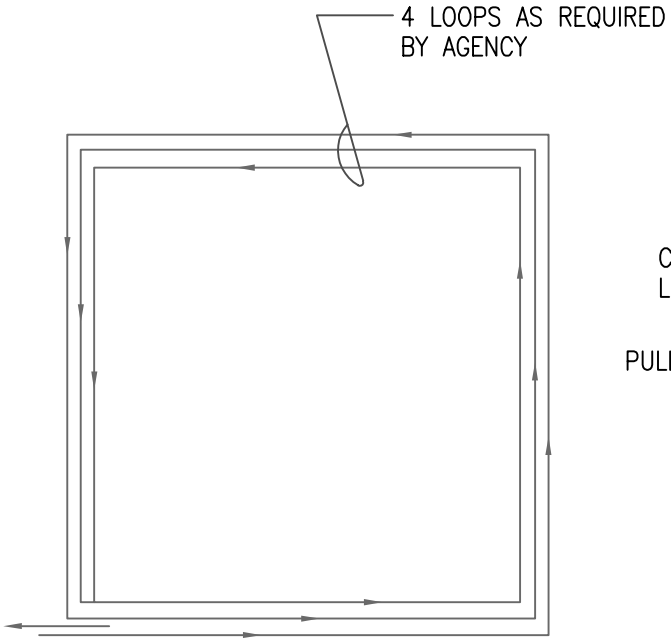

WIRE LAYOUT

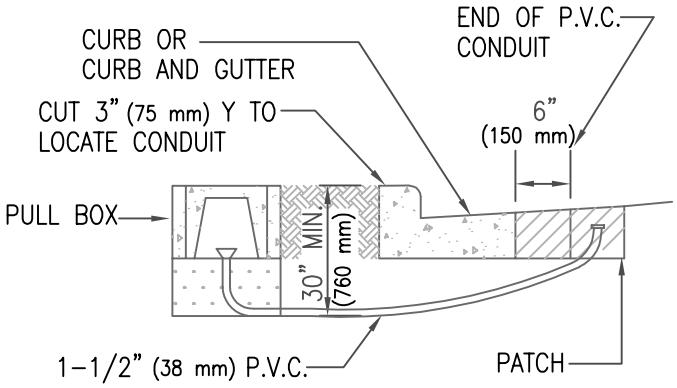

WITH CURB AND GUTTER

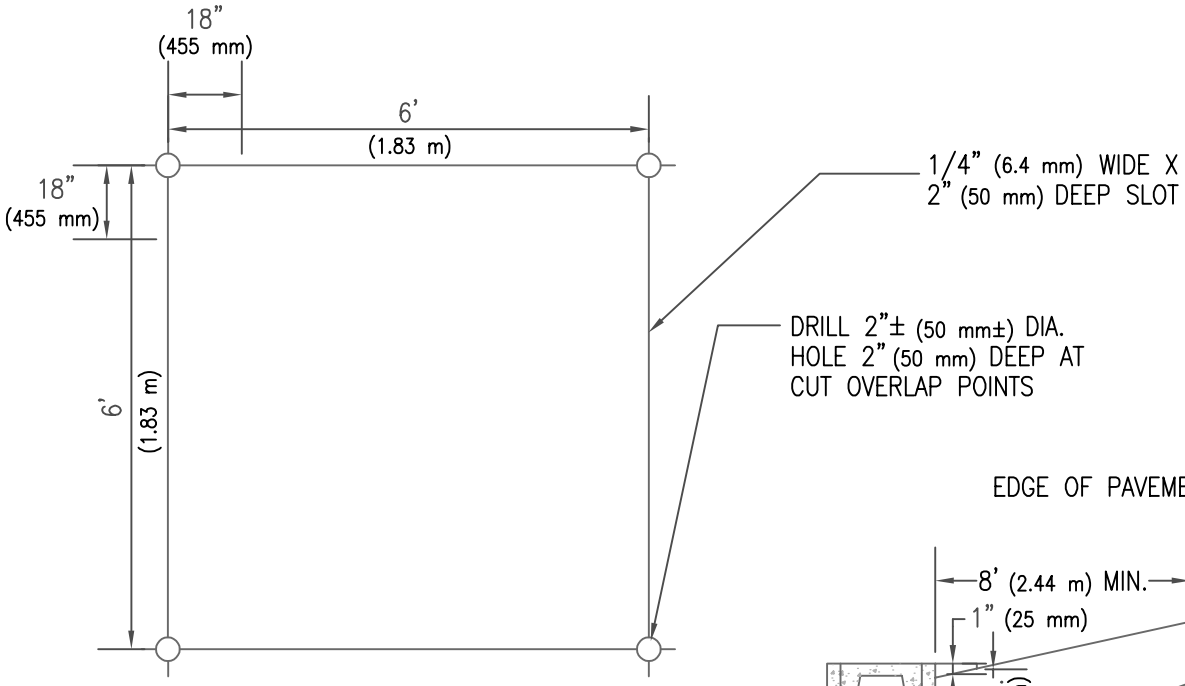

SAWCUT LAYOUT

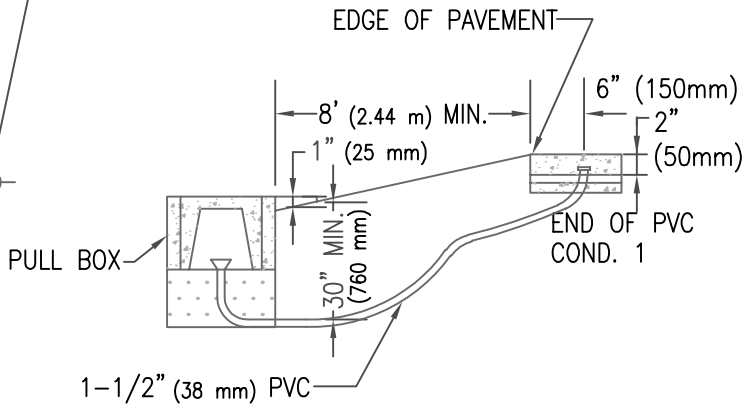

WITHOUT CURB AND GUTTER

ISSUED:		STANDARD DETAIL		DETAIL NO.
7/89	CITY OF TUCSON FOUNDED 1775	6X6 LOOP DETECTOR	THE SEAL of PIMA COUNTY ARIZONA	T 710
REVISED:				
10/02				SHEET 1 OF 2

TS7-10-1.DWG 12/07/00 11:54

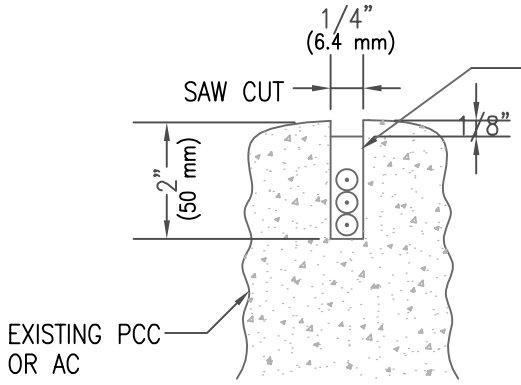

DETAIL 1

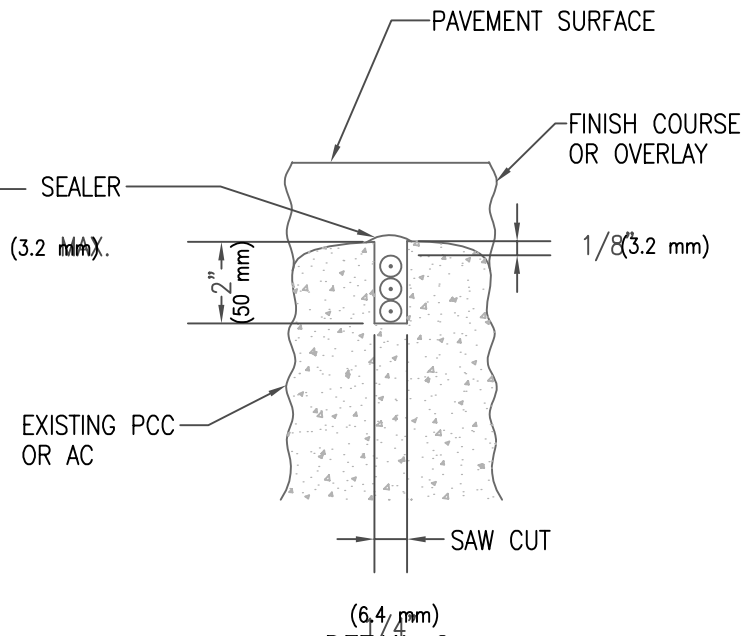

DETAIL 2

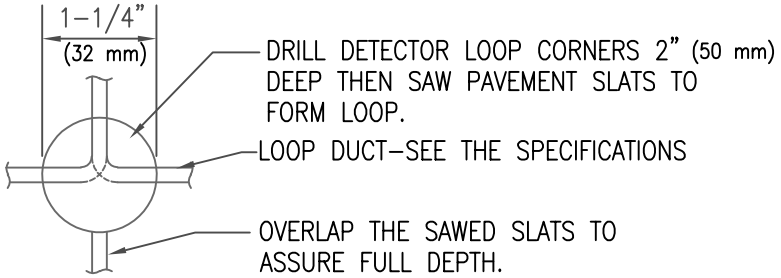

DRILLING DETAIL

NOTES:

1. ONE LOOP DETECTOR SHALL BE INSTALLED PER LANE AND IT SHALL BE LOCATED IN THE CENTER OF THE LANE.
2. LOOPS SHALL BE INSTALLED IN ACCORDANCE WITH THE REQUIREMENTS OF DETAIL 1 WHEN THERE IS TO BE NO ADDITIONAL SURFACING.
3. LOOPS SHALL BE INSTALLED IN ACCORDANCE WITH THE REQUIREMENTS OF DETAIL 2 WHEN THERE IS TO BE AN OVERLAY, OR FINISH COURSE.

ISSUED:		STANDARD DETAIL		DETAIL NO.
7/89		6X6 LOOP DETECTOR		T 710
REVISED:				SHEET 2 OF 2
10/02				

TS7-10-2.DWG 12/07/00 12:02

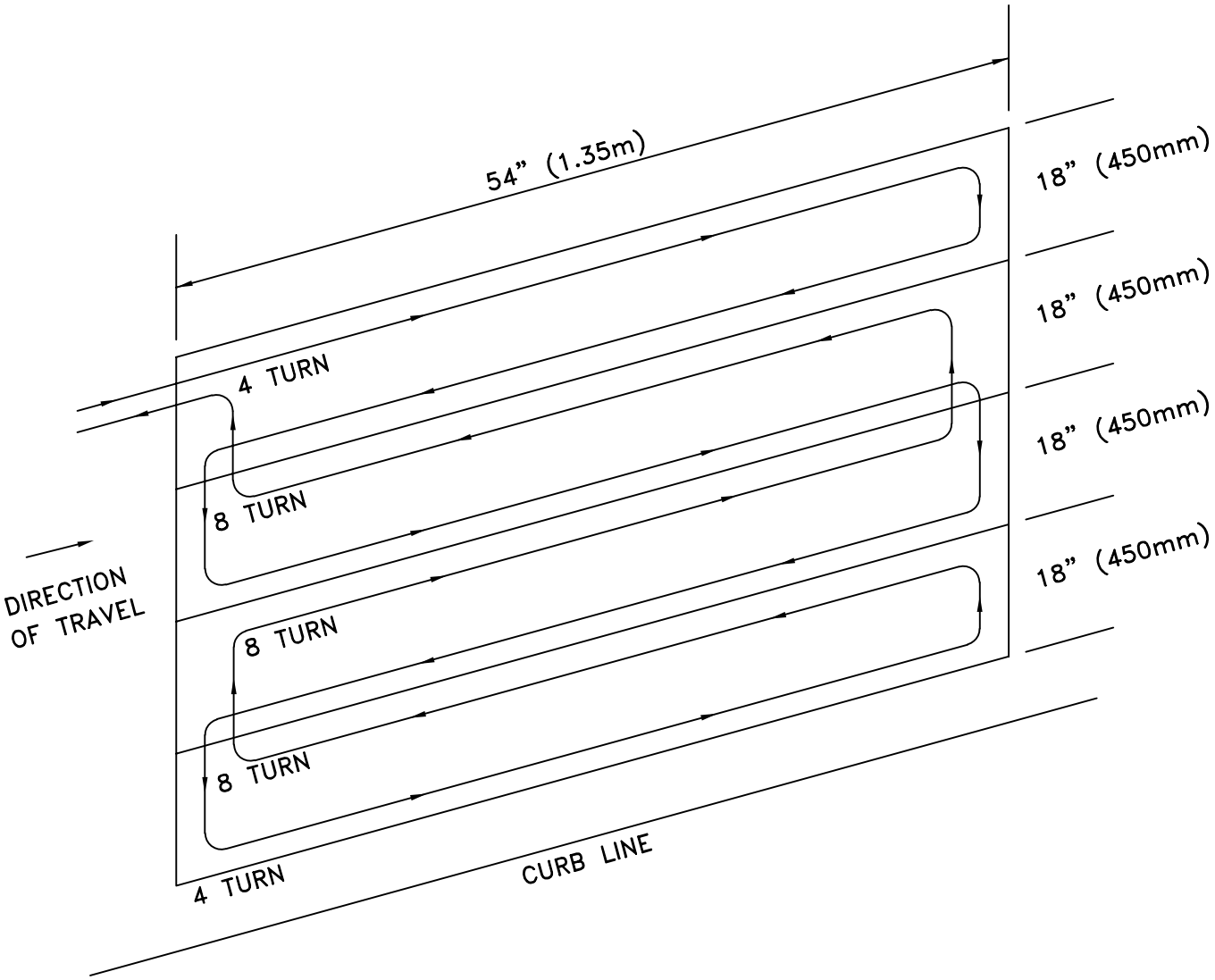

NOTES:

1. SAW CUT DEPTH SHOULD BE 2" – 3" (50mm – 75mm)

ISSUED:		STANDARD DETAIL		DETAIL NO.
7/89		BICYCLE LANE DETECTOR LOOP		T 711
REVISED:				
11/04				SHEET 1 OF 1

TS7-11.DWG 12/07/00 11:55

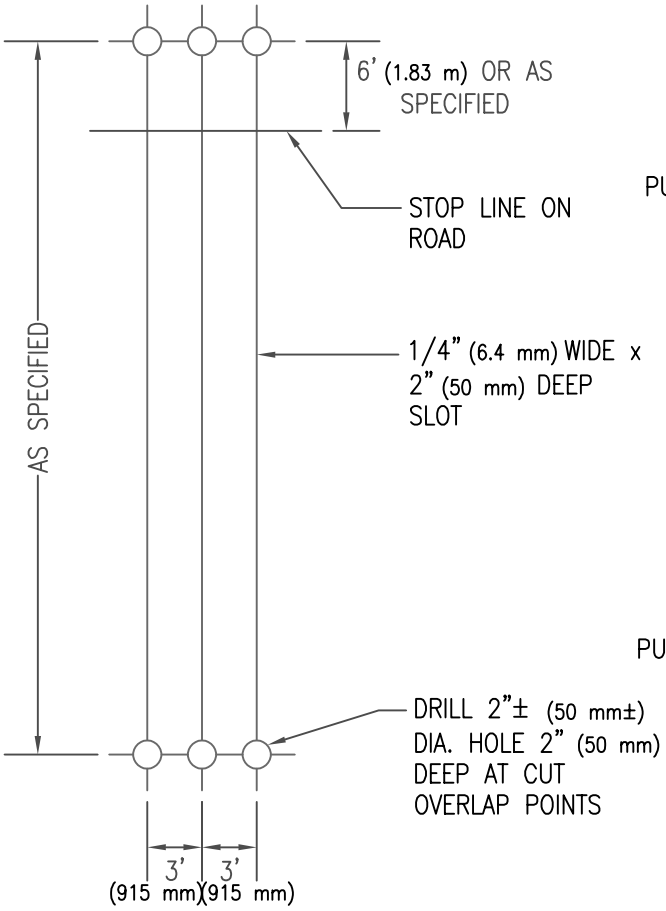

SAWCUT LAYOUT

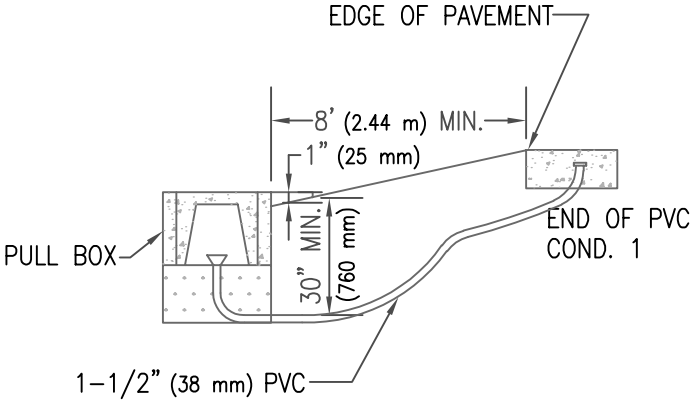

WITHOUT CURB AND GUTTER

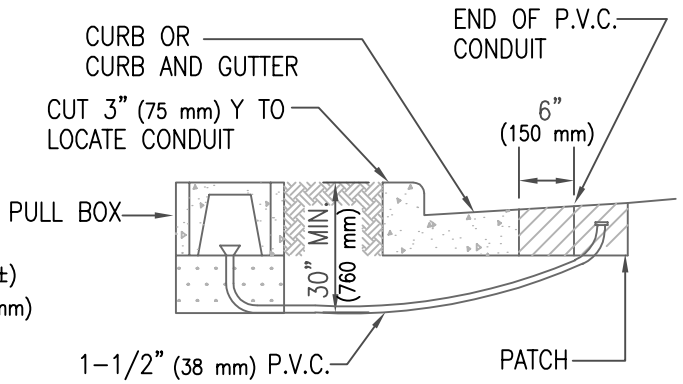

WITH CURB AND GUTTER

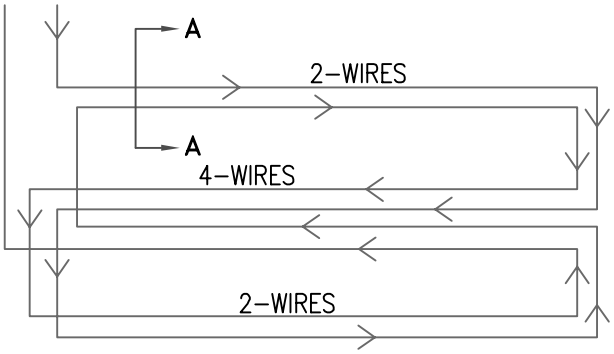

WIRING DIAGRAM FOR QUADRUPLE DETECTOR (2 TURNS)

ISSUED:		STANDARD DETAIL		DETAIL NO.
7/89		PRESENCE LOOP DETECTOR		T 712
REVISED:				
10/02				SHEET 1 OF 2

TS7-12-1.DWG 12/07/00 11:56

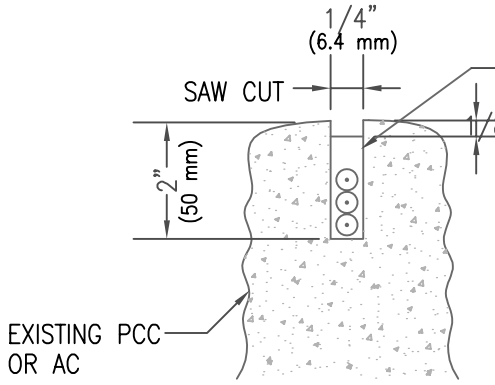

DETAIL 1

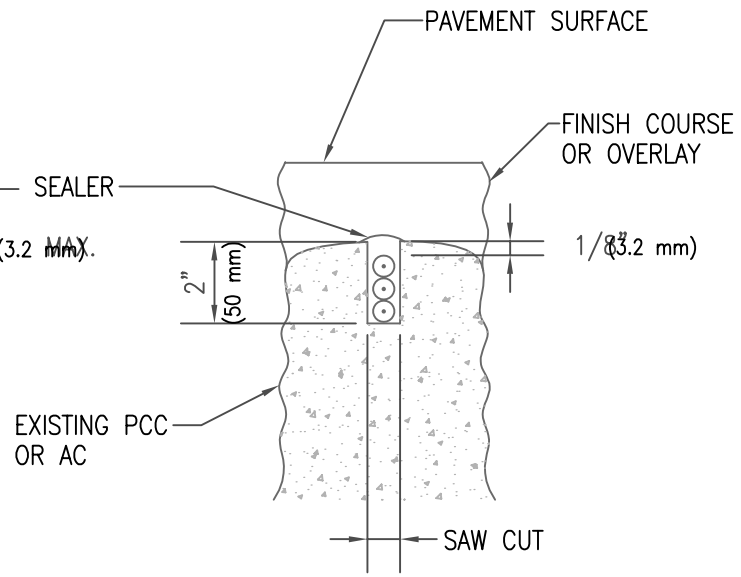

DETAIL 2

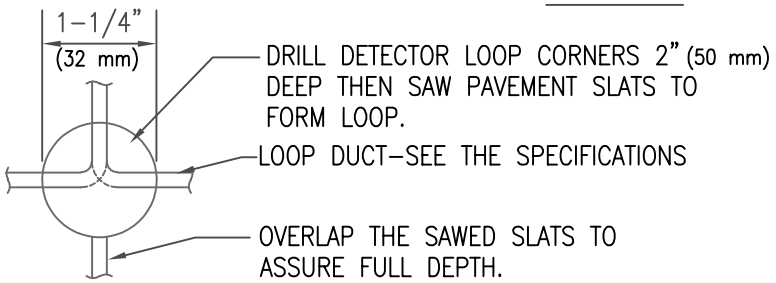

DRILLING DETAIL

NOTES:

1. LOOP SHALL BE LOCATED IN THE CENTER OF THE LANE.
2. LOOPS SHALL BE INSTALLED IN ACCORDANCE WITH THE REQUIREMENTS OF DETAIL 1 WHEN THERE IS TO BE NO ADDITIONAL SURFACING.
3. LOOPS SHALL BE INSTALLED IN ACCORDANCE WITH THE REQUIREMENTS OF DETAIL 2 WHEN THERE IS TO BE AN OVERLAY OR FINISH COURSE.
4. ALTERNATE SAW CUT TO CUT CORNERS WITH SAW CUT WHEN APPROVED BY THE ENGINEER. SEE STD. DET. T 710.

ISSUED:		STANDARD DETAIL		DETAIL NO.
7/89		PRESENCE LOOP DETECTOR		T 712
REVISED:				SHEET 2 OF 2
10/02				

TS7-12-2.DWG 12/07/00 11:56

NOTE:

UNDERGROUND TAPE MAY BE REQUIRED TO BE PLACED AT A DEEPER DEPTH, AS DIRECTED BY THE ENGINEER.

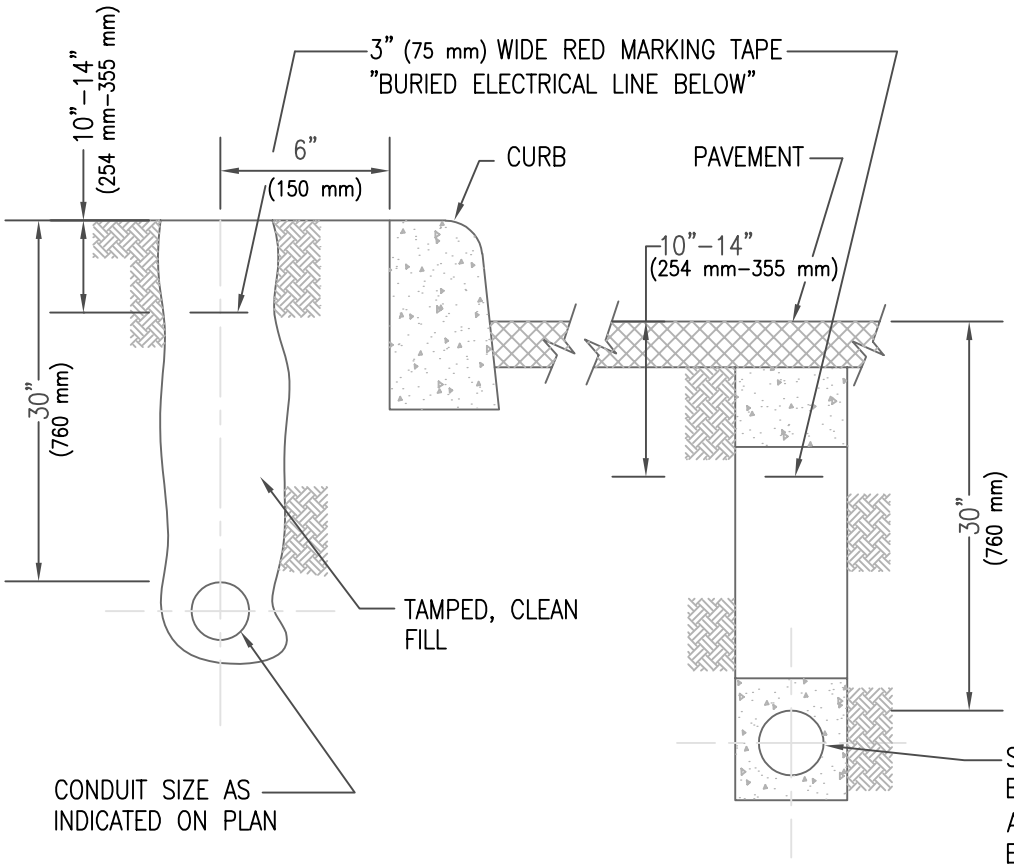

STREET CROSSING SHALL BE A CONDUIT ENCASED IN A 6" (150 mm) CONCRETE ENVELOPE WITH A TYPE 3 UTILITY TRENCH PATCH DETAIL 216.

ENCASEMENT SHALL HAVE A MIN. OF 3" (75 mm) OF CONCRETE ON ALL SIDES OF CONDUIT (S).

ISSUED:		STANDARD DETAIL		DETAIL NO.
7/89		UNDERGROUND CONDUIT		T 713
REVISED:				
11/04				SHEET 1 OF 1

TS7-13.DWG 12/07/00 12:01

LOOP INSTALLATION SHALL BE ACCORDING TO STANDARD DETAIL T 710
EXCEPT AS NOTED HEREIN.

1. ALL LOOPS SHALL BE INSTALLED IN THE CLOCKWISE DIRECTION.

2. NO MORE THAN 4 LOOP CONDUCTORS SHALL BE INSTALLED IN ONE SAWED SLOT.

3. IDENTIFY AND TAG WITH LOOP NUMBER, START (S) AND FINISH (F) OF EACH CONDUCTOR WITH IDENTIFICATION NYLON CABLE TIES AND NON-ERASABLE INK. WHEN MULTIPLE LANES ARE RECEIVING LOOPS THE TAGS SHALL ALSO INDICATE THE PROPER LANE AS FOLLOWS: LANE 1, LANE 2, OR LEFT TURN 1, LEFT TURN 2, ETC. WHERE 1 INDICATES THE LANE CLOSEST TO THE ISLAND OR DOUBLE YELLOW CENTER LINE, WITH LANES BEING NUMBERED CONSECUTIVELY AS YOU WORK YOUR WAY TO THE CURB OR ROADWAY EDGE. INCLUDE RIGHT TURN-LANE LOOPS AND BIKE LOOPS.

4. TO PREVENT FIELD CANCELLATION, LOOPS SHALL BE WIRED SUCH THAT CURRENT IN ADJACENT LOOPS WILL FLOW IN THE SAME DIRECTION AS SHOWN IN THE WIRING DETAIL. ALL SPLICES SHALL BE SOLDERED ACCORDING TO THE STANDARD SPECIFICATIONS FOR LOOP DETECTOR SPLICES.

5. LOOP SLOTS SHALL BE 1/4 INCH (6.4 mm) WIDTH.

6. FROM THE PULL BOX INTO THE CABINET 4 CONDUCTOR OR 2 CONDUCTOR. TWISTED PAIR CABLE WILL BE REQUIRED AS APPROVED BY THE AGENCY.

7. THE TERMINALS IN THE CABINET MUST BE SOLDERED AND THE WIRES SHOULD BE TWISTED PRIOR TO ATTACHMENT IN THE CABINET.

8. CALL LOOPS (6' X 6' (1.83 m X 1.83 m)) SHALL BE INSTALLED 3' (915 mm) OR 6' (1.83 m) BEHIND STOP BAR AS SPECIFIED.

9. 6' X 6' (1.83 m X 1.83 m) TURN LOOP CONFIGURATION, UNLESS OTHERWISE SPECIFIED:
   a. CALL (STOP BAR) LOOPS CONSIST OF 3 TURNS
   b. ADVANCE LOOPS (TYPICALLY 100-200 FEET (30.48 m-60.96 m) FROM STOP BAR, SHALL CONSIST OF 4 TURNS.
   c. SYSTEM LOOPS, TYPICALLY 300-400 FEET (91.44 m-121.92 m) FROM STOP BAR, SHALL CONSIST OF 5 TURNS.

10. HOOK UP SYSTEM LOOPS IN PARALLEL, ADVANCE LOOPS IN SERIES.

ISSUED:		STANDARD DETAIL		DETAIL NO.
7/89	CITY OF TUCSON FOUNDED 1775	6x6 PRESENCE MULTI-LOOP DETECTOR	THE SEAL of PIMA COUNTY ARIZONA	T 714
REVISED:				
10/02				SHEET 1 OF 6

TS7-14-1.DWG 12/07/00 12:02

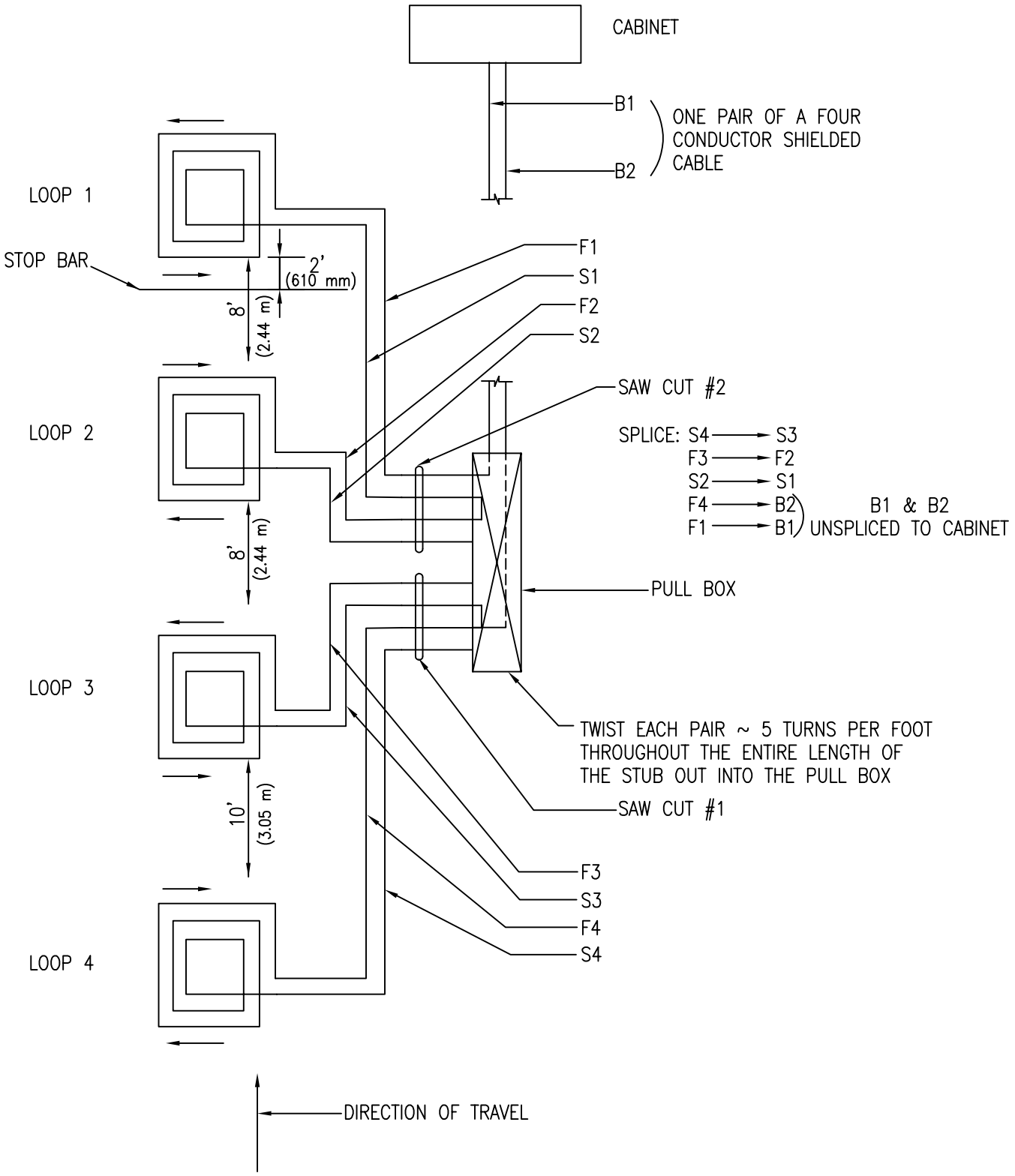

ISSUED:		STANDARD DETAIL		DETAIL NO.
7/89	CITY OF TUCSON FOUNDED 1775	6X6 PRESENCE LOOP DETECTOR (WIRING DETAIL)	THE SEAL of PIMA COUNTY ARIZONA	T 714
REVISED: 11/04				SHEET 2 OF 6

TS7-14-2.DWG 08/07/00 14:22

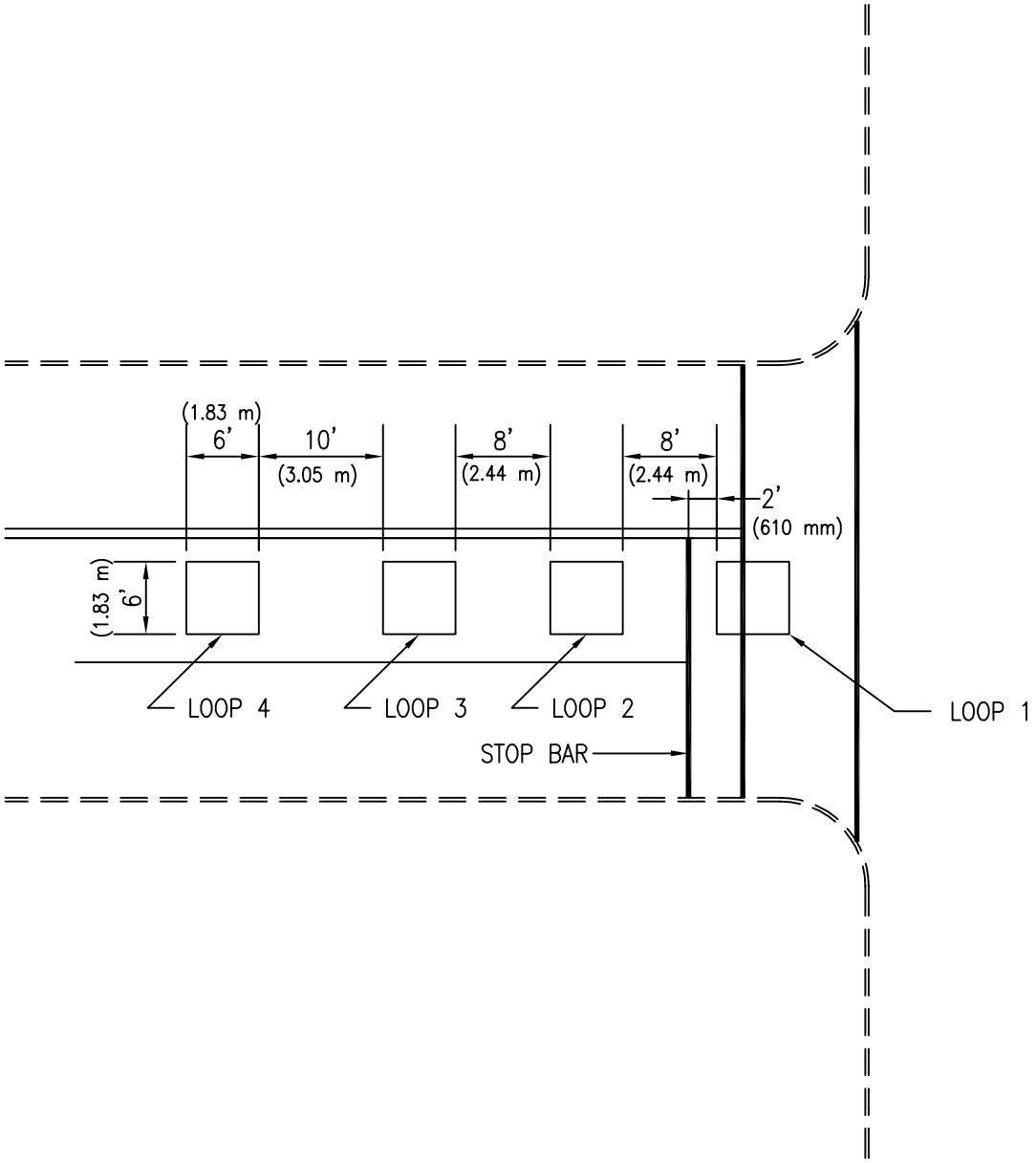

ISSUED:		STANDARD DETAIL		DETAIL NO.
7/89		6X6 PRESENCE LOOP DETECTOR (SAW CUT DETAIL)		T 714
REVISED:				
10/02				SHEET 3 OF 6

TS7-14-3.DWG 12/07/00 12:03

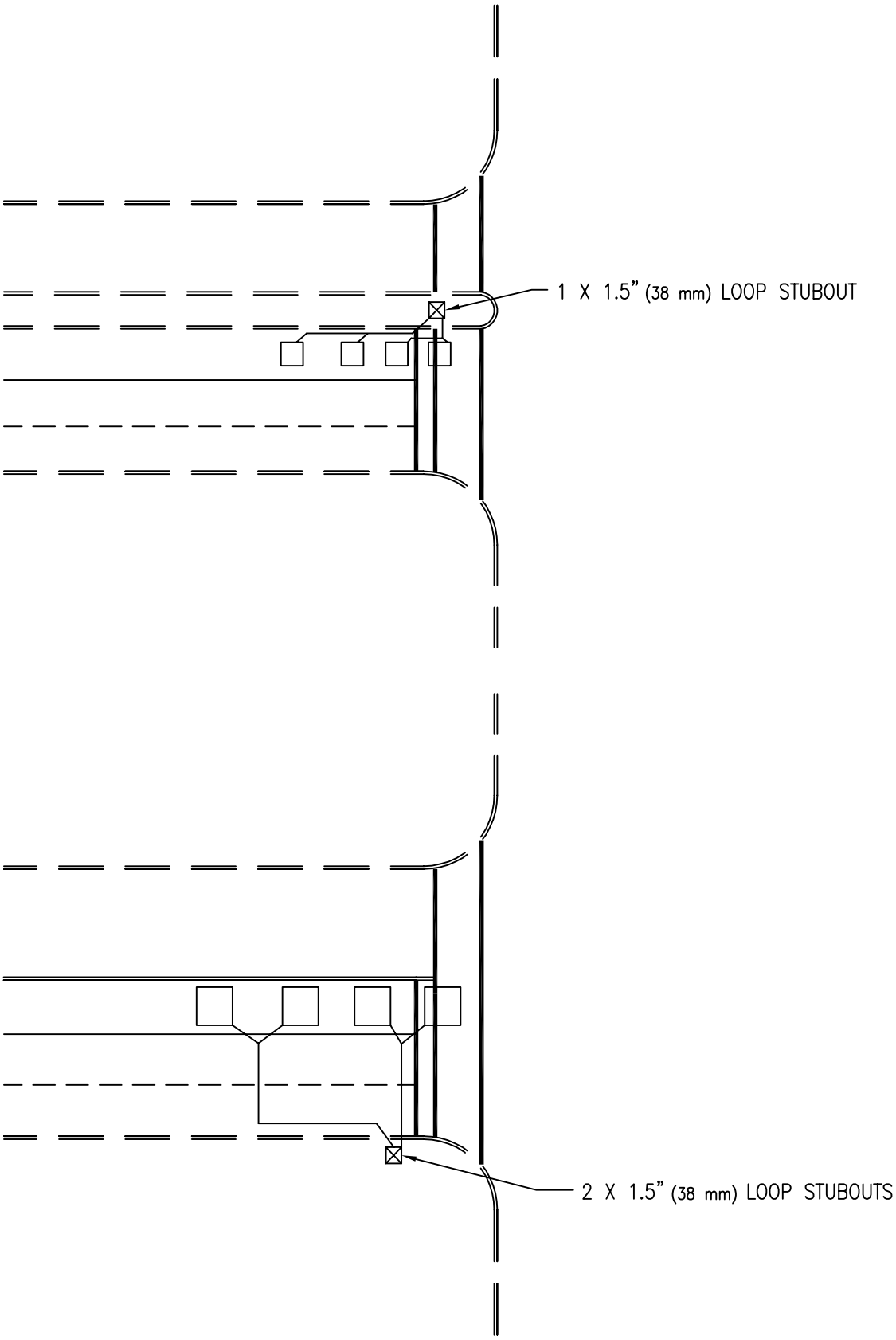

ISSUED:		STANDARD DETAIL		DETAIL NO.
7/89		6X6 PRESENCE LOOP DETECTOR (CASE 1: 1 LOOP)		T 714
REVISED:				
10/02				SHEET 4 OF 6

TS7-14-4.DWG 12/07/00 12:12

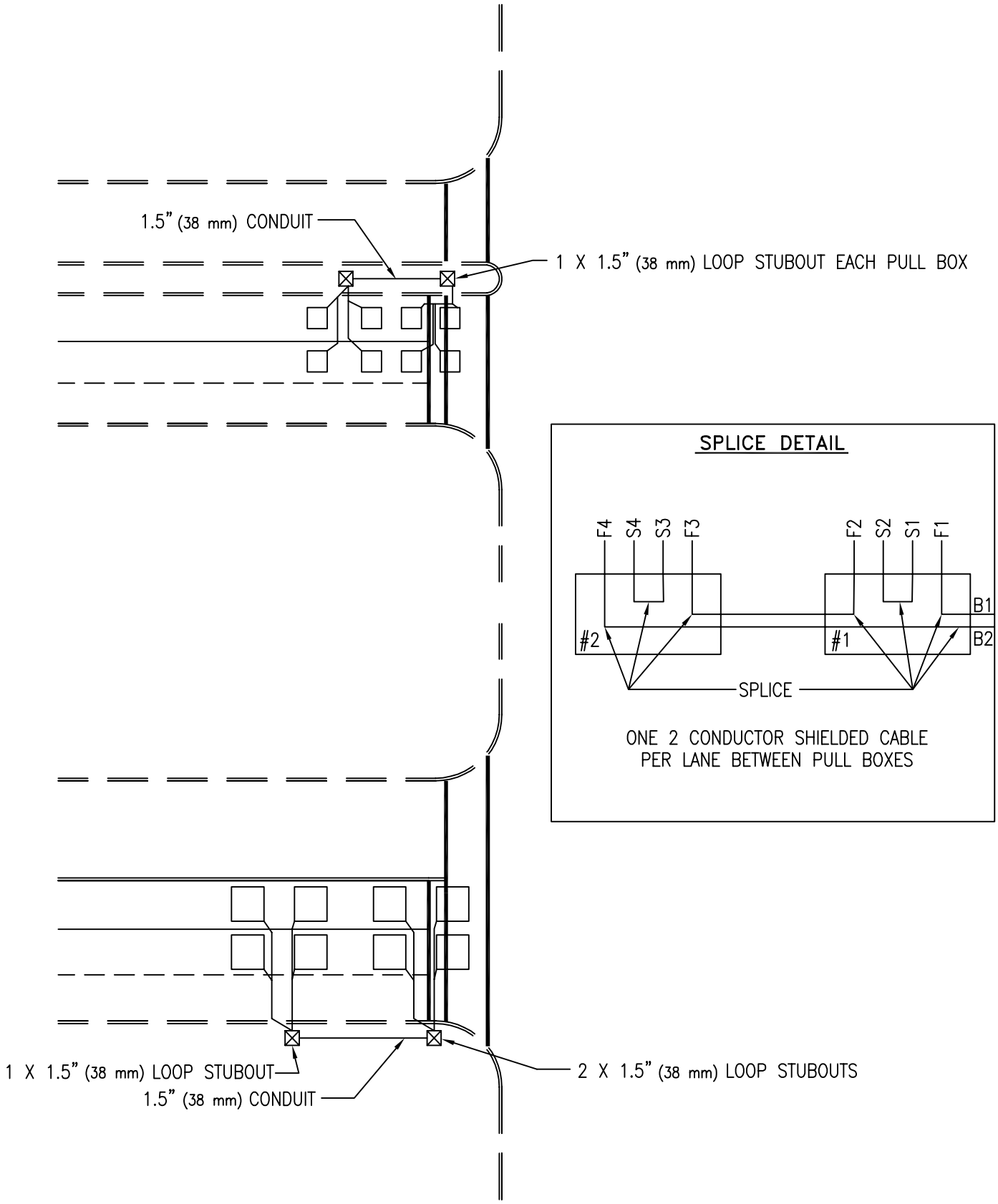

ISSUED:		STANDARD DETAIL		DETAIL NO.
7/89	CITY OF TUCSON FOUNDED 1775	6X6 PRESENCE LOOP DETECTOR (CASE 2: 2 LOOP)	THE SEAL of PIMA COUNTY ARIZONA	T 714
REVISED:				
10/02				SHEET 5 OF 6

TS7-14-5.DWG 12/07/00 13:19

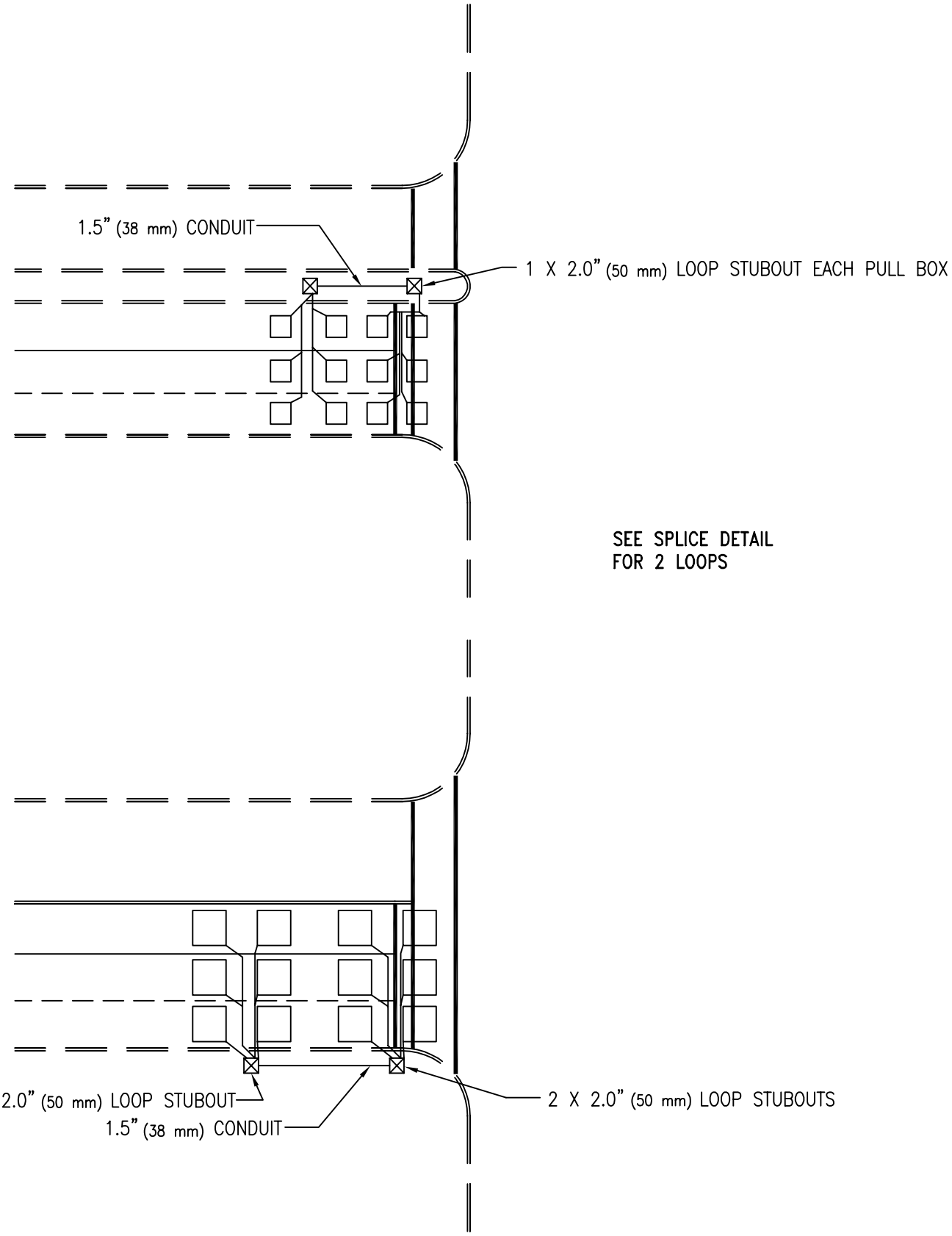

ISSUED:		STANDARD DETAIL		DETAIL NO.
7/89		6X6 PRESENCE LOOP DETECTOR (CASE 3: MULTI-LOOPS)		T 714
REVISED:				
10/02				SHEET 6 OF 6

TS7-14-6.DWG 12/07/00 13:20

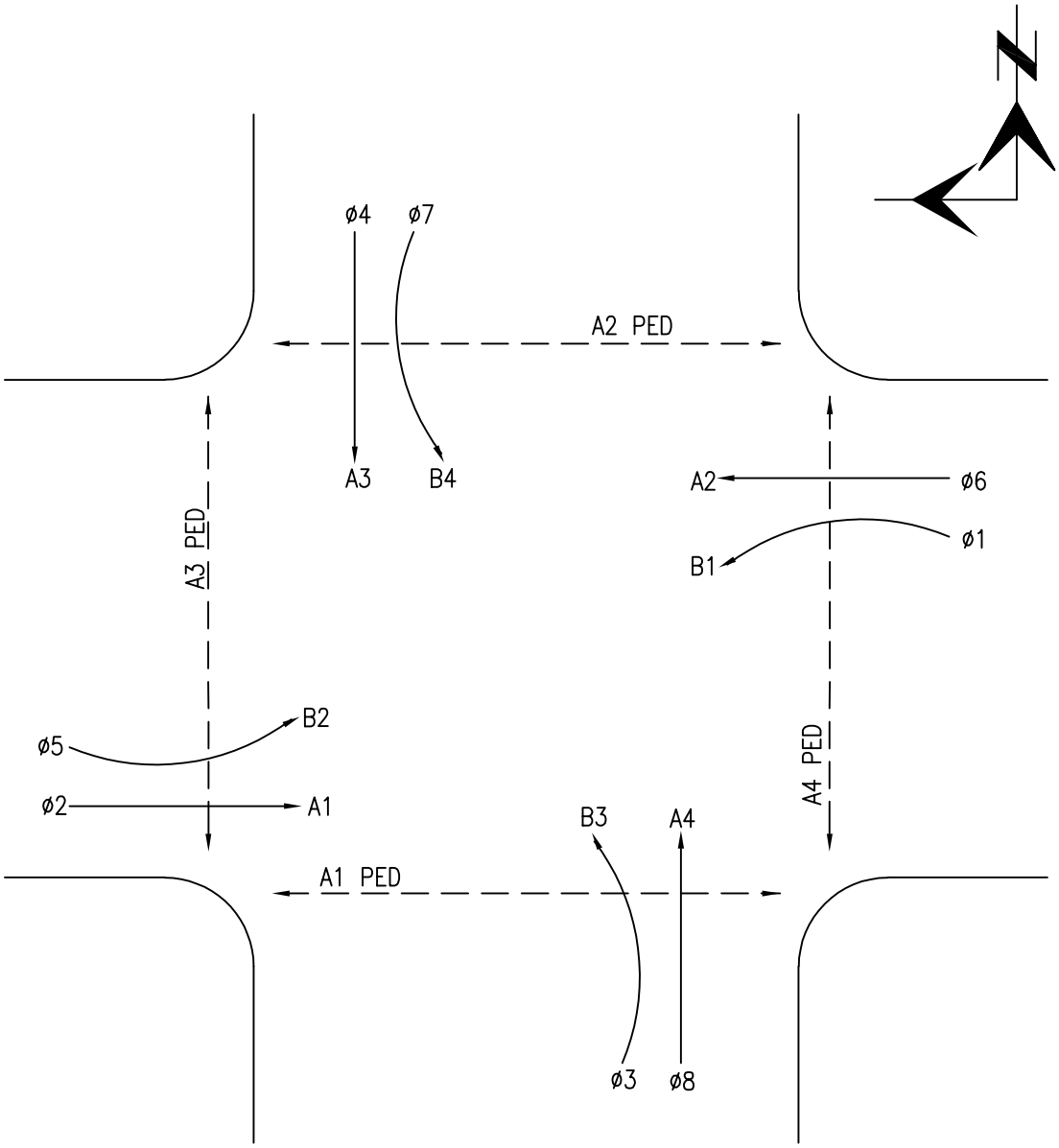

ORIENT NORTH ARROW SO THE MAIN STREET IS A1 AND A2

ISSUED:		STANDARD DETAIL		DETAIL NO.
7/89		STANDARD PHASING DETAIL		T 800
REVISED:				
10/02				SHEET 1 OF 1

TS8-0.DWG 12/07/00 13:21

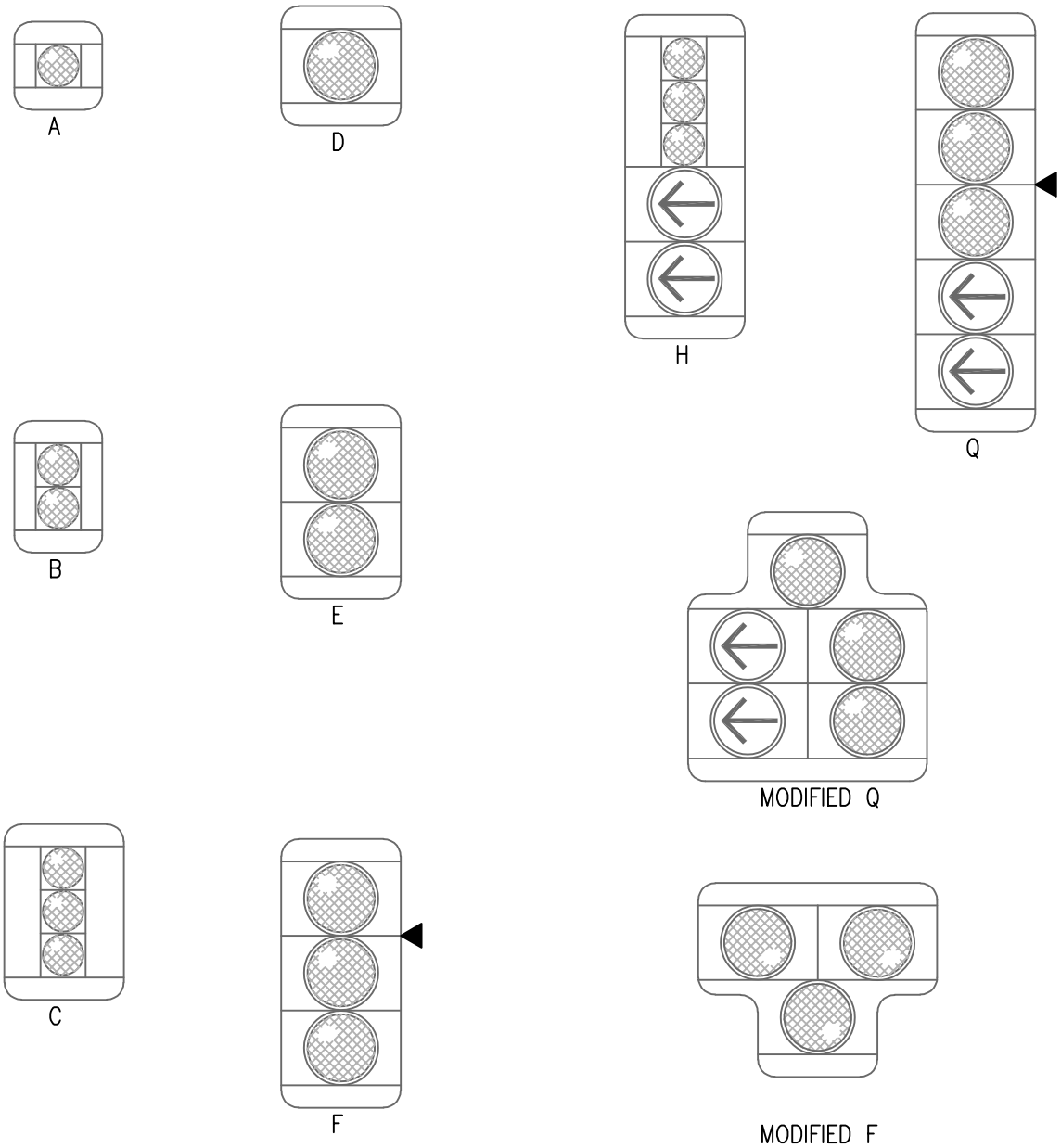

NOTE:

ALL POLYCARBONATE HEADS USED FOR MAST ARM MOUNTING OR SPAN WIRE MOUNTING SHALL BE SUPPLIED WITH REINFORCING PLATES. REFER TO STD. DET. T 901–T 913 FOR MOUNTING ASSEMBLY DETAILS.

ISSUED:		STANDARD DETAIL		DETAIL NO.
7/89		SIGNAL FACES WITH BACKPLATES		T 801
REVISED:				
10/02				SHEET 1 OF 2

TS8-1-1.DWG 12/07/00 13:21

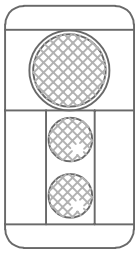

INV. J

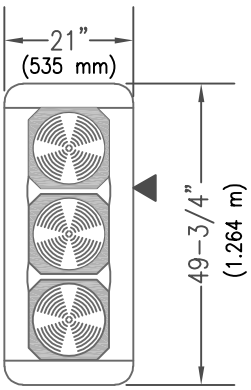

0-3

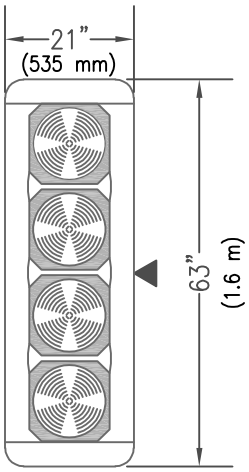

0-4

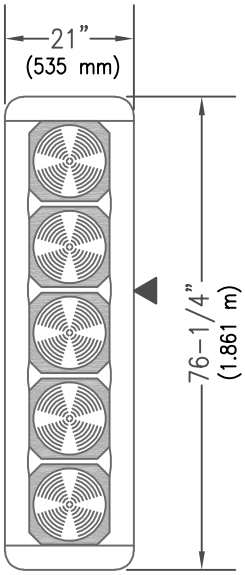

0-5

NOTES:

1. ALL MATERIALS AND CONSTRUCTION SHALL CONFORM TO THE REQUIREMENTS OF THE SPECIFICATIONS.
2. ALL DIMENSIONS SHOWN ARE NOMINAL.
3. BACKPLATES SHALL BE CONTINUOUS WITH NO OPEN GAPS.

◀ INDICATES LOCATION OF ELEVATOR PLUMBIZER FOR MAST ARM MOUNTS AS PER PLANS.

ISSUED:		STANDARD DETAIL		DETAIL NO.
7/89		SIGNAL FACES WITH BACKPLATES		T 801
REVISED:				
10/02				SHEET 2 OF 2

\\Glen\9626.00\C1\T S\T S Eng&Met\TS8-1-2.dwg 11/19/01 11:18:48 AM UMST

NOTES:

1. ALL MATERIAL AND CONSTRUCTION SHALL CONFORM TO THE REQUIREMENTS OF THE STANDARD SPECIFICATIONS.
2. ALUMINUM VISORS TO BE 11" (279 mm) TO 12" (305 mm) LONG AND POLY VISORS TO BE 8" (205 mm) TO 10" (254 mm), UNLESS SPECIFIED OTHERWISE.
3. VISORS SHALL BE ATTACHED TO THE SIGNAL HOUSING WITH TABS AS SHOWN.

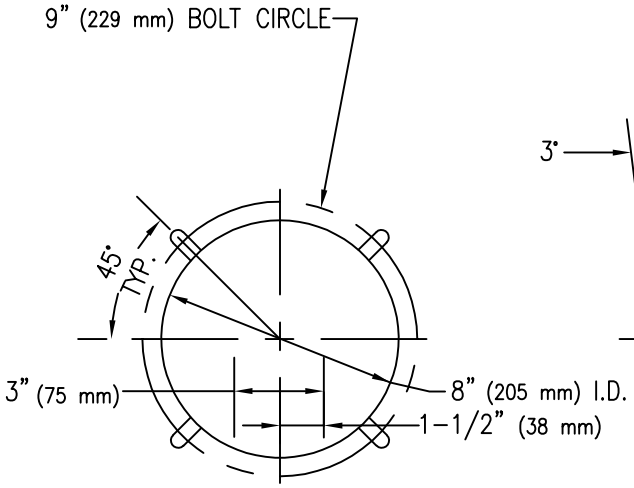

8" (205 mm) UNIT VISORS
TUNNEL TYPE

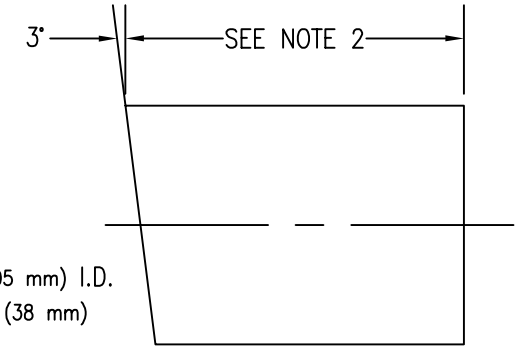

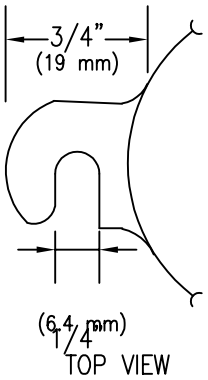

TYPICAL VISOR
ATTACHING TAB

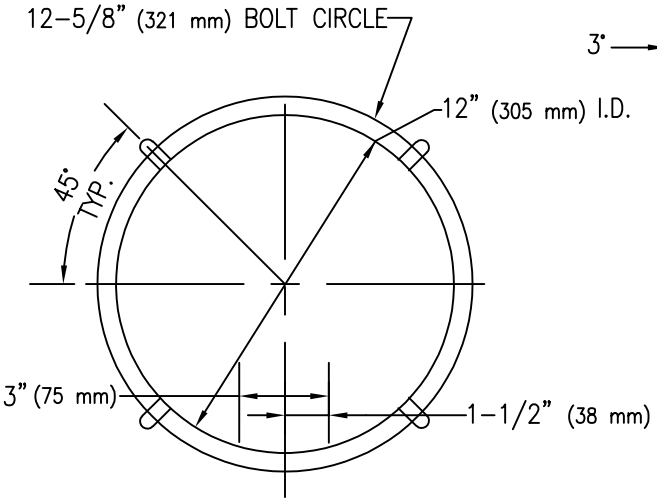

12" (305 mm) UNIT VISORS
TUNNEL TYPE

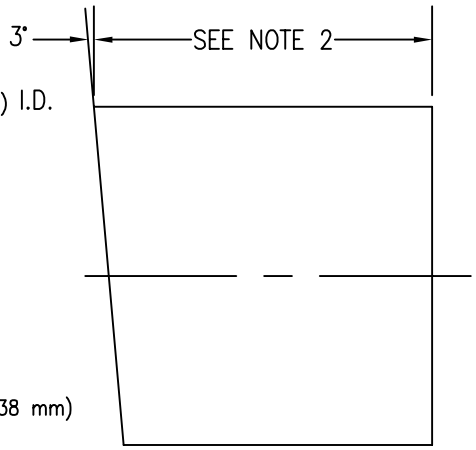

ISSUED:		STANDARD DETAIL		DETAIL NO.
7/89		VISORS FOR 8" AND 12" SIGNALS		T 802
REVISED:				
10/02				SHEET 1 OF 1

TS8-2.DWG 12/07/00 13:22

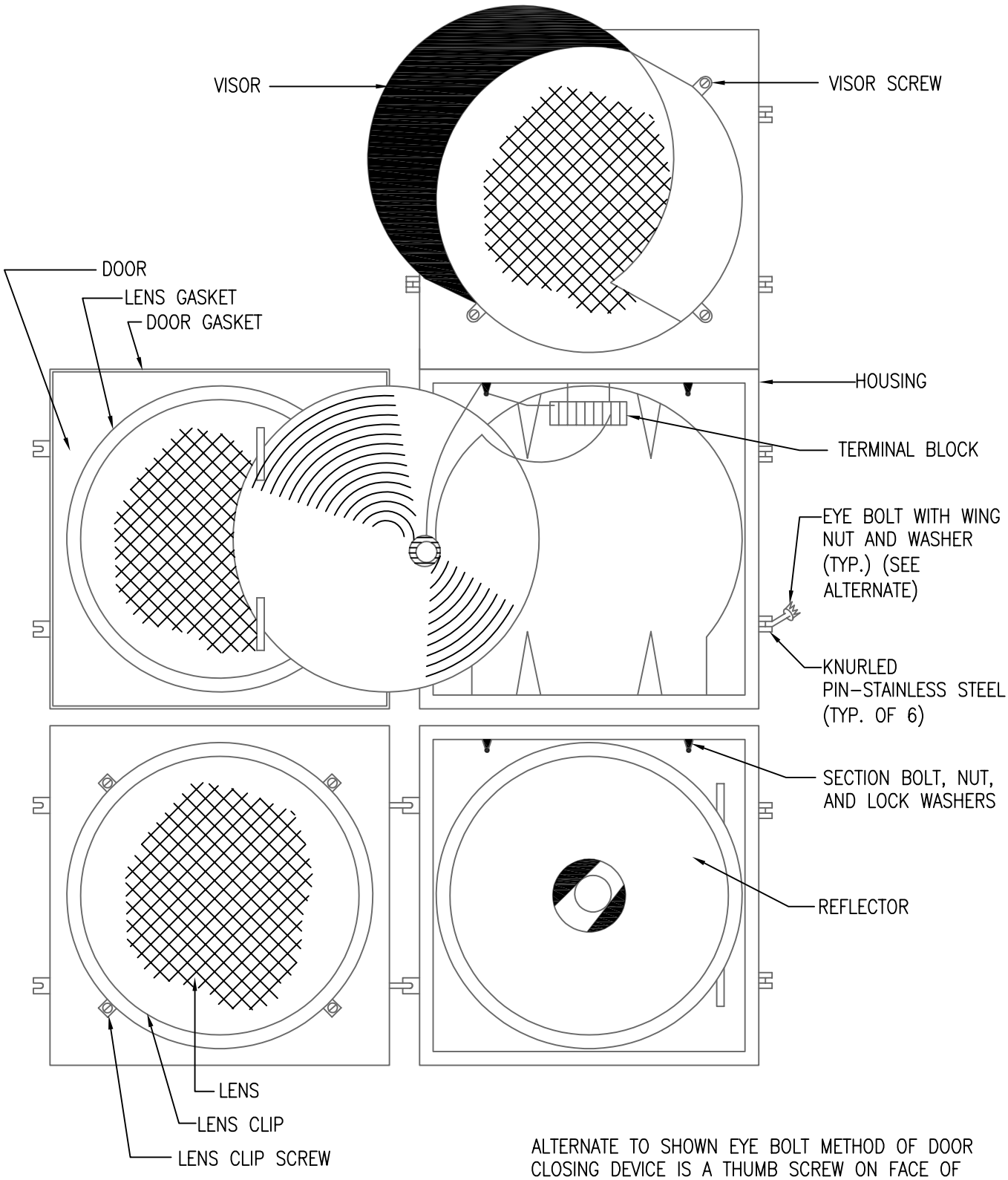

ALTERNATE TO SHOWN EYE BOLT METHOD OF DOOR CLOSING DEVICE IS A THUMB SCREW ON FACE OF DOOR PROTRUDING INTO THREADS IN REAR HOUSING.

ISSUED:		STANDARD DETAIL		DETAIL NO.
7/89		TYPICAL SIGNAL HEAD		T 803
REVISED:				
10/02				SHEET 1 OF 1

TS8–3.DWG 12/07/00 13:23

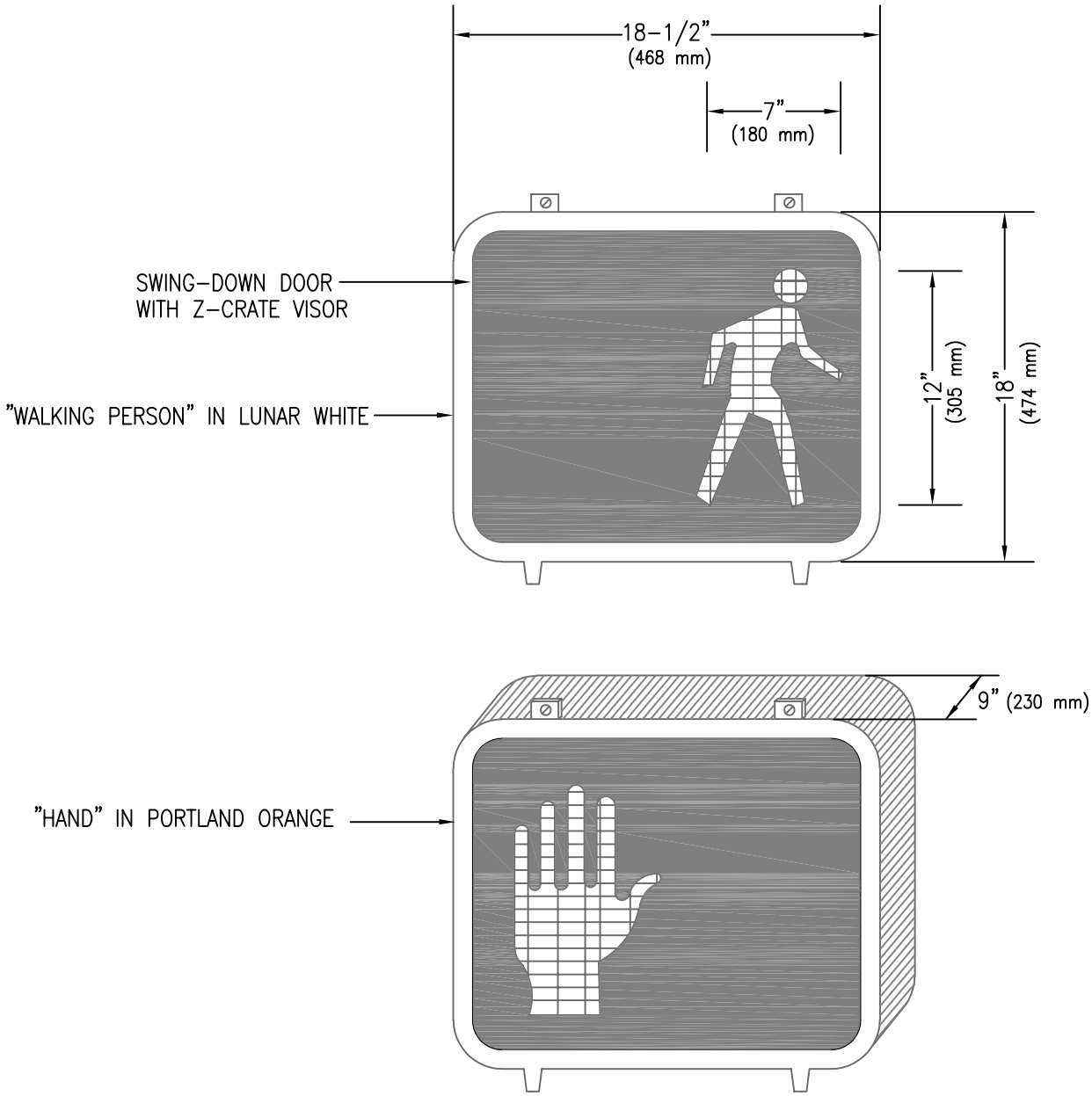

ISSUED:		STANDARD DETAIL		DETAIL NO.
7/89		PEDESTRIAN MAN/HAND STYLE SIGNAL		T 804
REVISED:				
10/02				SHEET 1 OF 1

TS8-4.DWG 12/07/00 13:23

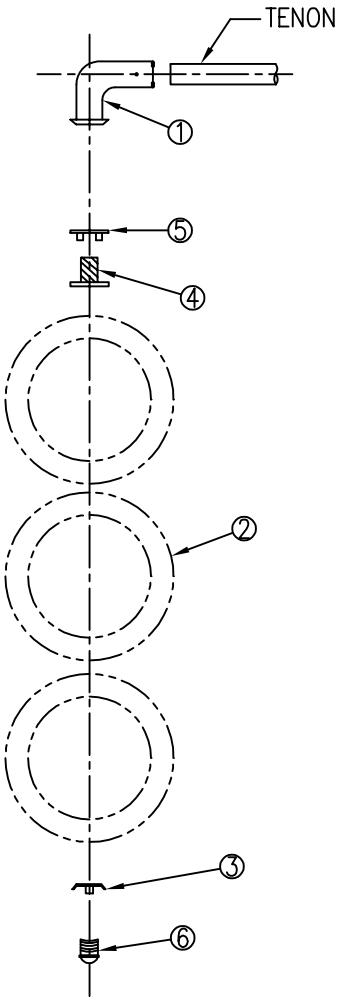

TYPE I MOUNTING

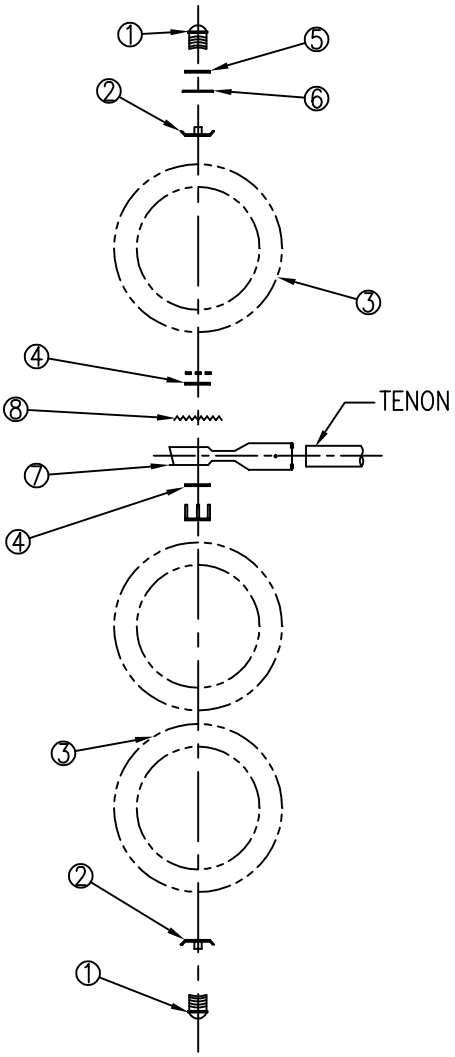

TYPE II MOUNTING

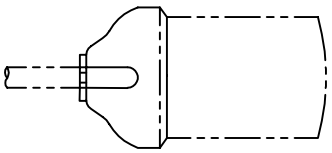

MOUNTING ORIENTATION PLAN

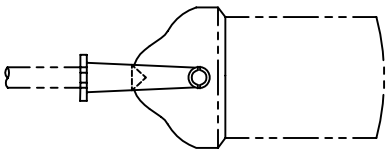

MOUNTING ORIENTATION PLAN

NOTE: TYPE I MOUNT TO BE USED WITH ALUMINUM HEADS ONLY

ISSUED:		STANDARD DETAIL		DETAIL NO.
7/89	CITY OF TUCSON	TYPE I AND II MOUNTING ASSEMBLY	THE SEAL of PIMA COUNTY ARIZONA	T 901
REVISED:				
10/02				SHEET 1 OF 2

TS9-1-1.DWG 12/07/00 13:25

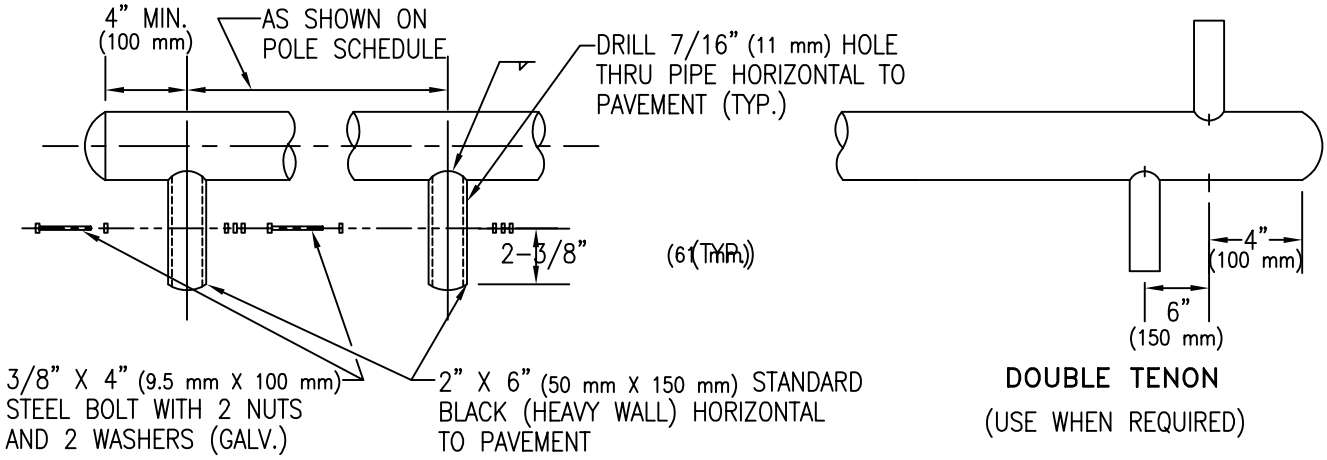

TENON DETAIL

DOUBLE TENON

(USE WHEN REQUIRED)

TYPE I MOUNT

LIST OF MATERIAL		
ITM.	QUA.	
1	1	MAST ARM PLUMBIZER WITH LOCKING DEVICE (SEE T1002)
2	1	SIGNAL HEAD, SEE PLANS
3	1	CONDUIT LOCKNUT
4	1	1-1/2" (38 mm) X 1-3/4" (44 mm) LOCK NIPPLE
5	1	LOCK RING (SEE T1001-4)
6	1	ORNAMENTAL CAP (SEE T1001-6)

TYPE II MOUNT

LIST OF MATERIAL		
ITM.	QUA.	
1	2	ORNAMENTAL CAP (SEE T1001-6)
2	2	CONDUIT LOCKNUT
3	1	SIGNAL HEAD, SEE PLANS POLE LAYOUT
4	2	ATTACHING WASHERS W/ 3-1/4-20 UNC x 3-1/2 CARRIAGE
		BOLTS AND NUTS
5	1	FLAT WASHERS
6	1	NEOPRENE WASHER
7	1	ELEVATOR PLUMBIZER (SEE T1002)
8	1	LOCK WASHER

ISSUED:		STANDARD DETAIL		DETAIL NO.
7/89	CITY OF TUCSON FOUNDED 1775	TYPE I AND II MOUNTING ASSEMBLY	THE SEAL of PIMA COUNTY ARIZONA	T 901
REVISED: 11/04				SHEET 2 OF 2

TS9-1-2.DWG 12/07/00 13:27

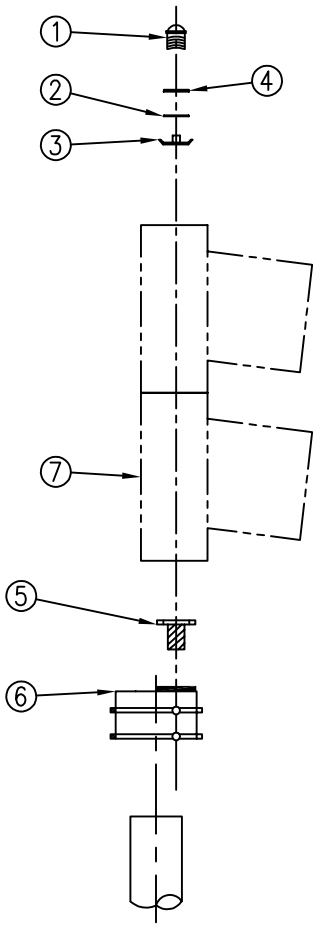

TYPE III MOUNTING

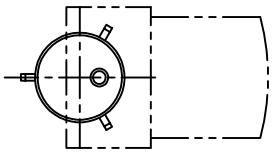

MOUNTING ORIENTATION PLAN

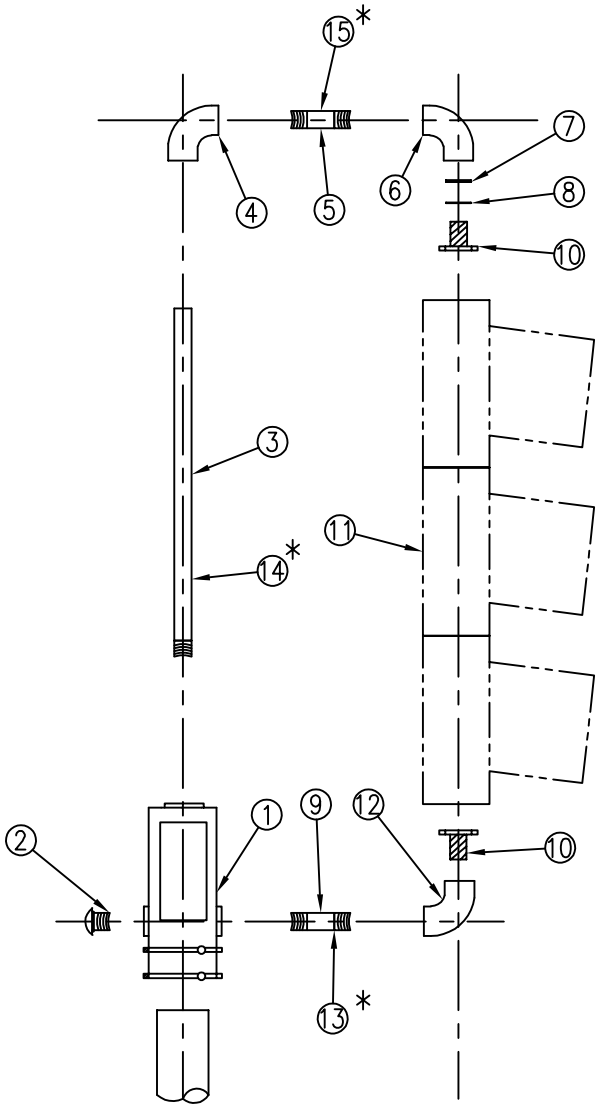

TYPE IV MOUNTING

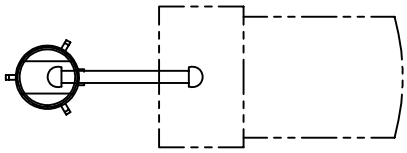

MOUNTING ORIENTATION PLAN

ISSUED:		STANDARD DETAIL		DETAIL NO.
7/89		TYPE III AND IV MOUNTING ASSEMBLY		T 902
REVISED:				
10/02				SHEET 1 OF 2

TS9-2-1.DWG 12/07/00 13:27

TYPE III MOUNT

LIST OF MATERIAL		
ITM.	QUA.	
1	1	ORNAMENTAL CAP (T1001-6)
2	1	NEOPRENE WASHER
3	1	CONDUIT LOCKNUT
4	1	FLAT WASHER
5	1	1-1/2" (38 mm) LOCK NIPPLE 1-1/8" (28 mm) LONG
6	1	POLE TOP OFFSET MOUNT (T1001-3)
7	1	SIGNAL HEAD - SEE PLANS

TYPE IV MOUNT

	LIST OF MATERIAL		
	ITM.	QUA.	
	1	1	POLE TOP MOUNTED TERMINAL COMPARTMENT (T1004-2)
	2	1	ORNAMENTAL CAP (T1001-6)
	3	1	1-1/2" (38 mm) CENTER PIPE, SEE TABLE
	4	1	90° ELBOW, DRILL AND TAP FOR SETSCREW
	5	1	1-1/2" (38 mm) PIPE NIPPLE, 6-1/2" (165 mm) LONG
	6	1	90° ELBOW
	7	1	FLAT WASHER
	8	1	NEOPRENE WASHER
	9	1	1-1/2" (38 mm) PIPE NIPPLE, 6" (150 mm) LONG
	10	2	1-1/2" (38 mm) LOCK NIPPLE, SEE NOTE BELOW
	11	1	SIGNAL HEAD, SEE PLANS
	12	1	90° ELBOW WITH LOCKING DEVICE (T1001-2)
*	13	1	1-1/2" (38 mm) PIPE NIPPLE, 12" (305 mm) LONG
*	14	1	1-1/2" (38 mm) PIPE NIPPLE, 9-1/2" (242 mm) LONG FOR PED SIGNAL FOR
			ILLUMINATED MESSAGE UNITS USE 23 5/8" X 1-1/2" (600 mm X 38 mm) PIPE
*	15	1	1-1/2" (38 mm) PIPE NIPPLE, 12-1/2" (318 mm) LONG

NOTE:
LOCK NIPPLE LENGTH SHALL BE 1-1/8" (28 mm) FOR 8" (205 mm) HEADS AND 1-3/4" (44 mm) FOR 12" (305 mm) HEADS.

NIPPLE LENGTH

TYPE IV MOUNT (ITEM 3)

SIGNAL FACE	C		F	M	Q	G	H
NIPPLE LENGTH	24 (610 mm)		37-7/8 (962 mm)	38-3/4 (984 mm)	61 (1.549 m)	52-5/8 (1.338 m)	53-1/2 (1.358 m)

* NIPPLE LENGTHS FOR USE WITH PEDESTRIAN SIGNAL UNITS, OR ILLUMINATED MESSAGE UNITS

ISSUED:	STANDARD DETAIL	DETAIL NO.
7/89	TYPE III AND IV MOUNTING ASSEMBLY	T 902
REVISED: 11/04		SHEET 2 OF 2

TS9-2-2.DWG 12/07/00 13:33

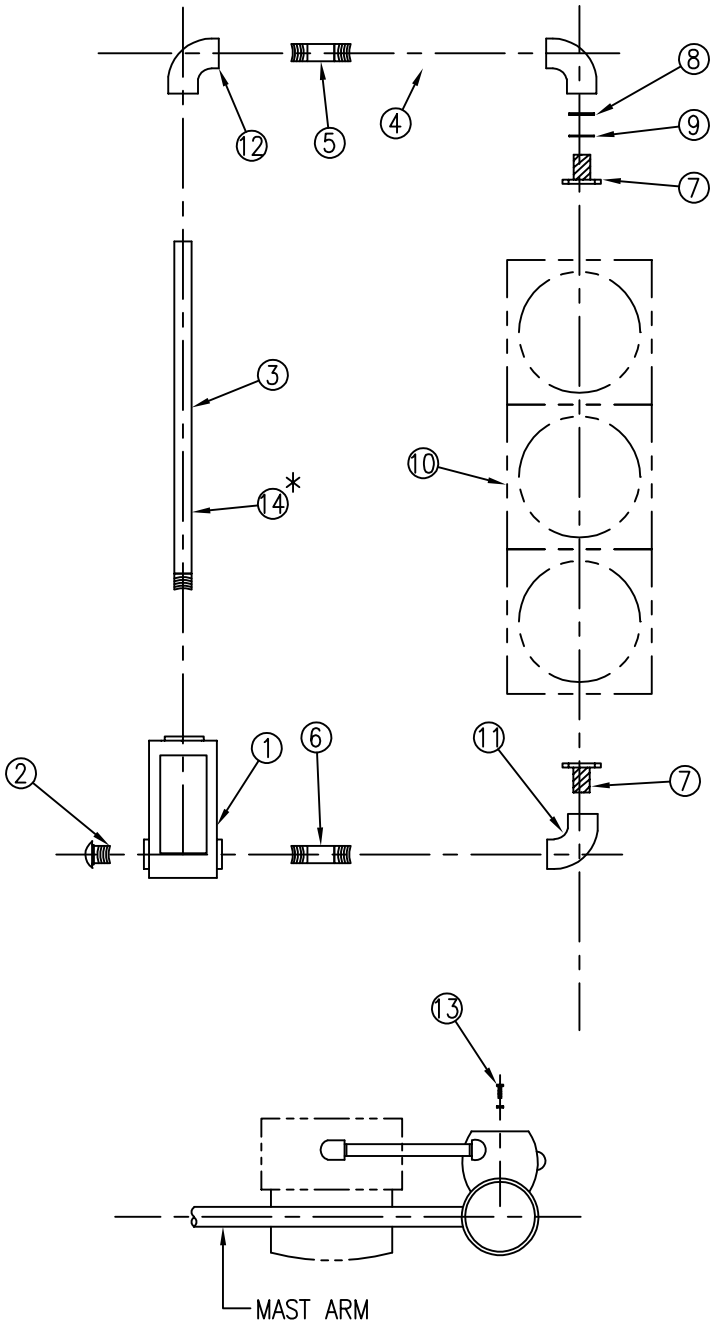

MOUNTING ORIENTATION PLAN

ISSUED:		STANDARD DETAIL		DETAIL NO.
7/89		TYPE V MOUNTING ASSEMBLY		T 903
REVISED:				
11/04				SHEET 1 OF 2

TS9-3-1.DWG 12/07/00 13:34

LIST OF MATERIAL		
ITM.	QUA.	DESCRIPTION
1	1	TERMINAL COMPARTMENT FOR SIDE MTG. (SEE T1004-1)
2	1	ORNAMENTAL CAP (SEE T1001-6)
3	1	1-1/2" (38 mm) I.D. PIPE, SEE TABLE
4	1	1-1/2" (38 mm) I.D. PIPE 90° ELL
5	1	1-1/2" (38 mm) I.D. PIPE NIPPLE, 18-1/2" (468 mm) LONG
6	1	1-1/2" (38 mm) I.D. PIPE NIPPLE, 18" (455 mm) LONG
7	1	1-1/2" (38 mm) LOCK NIPPLE, SEE NOTE NO. 1
8	1	FLAT WASHER
9	1	NEOPRENE WASHER
10	1	SIGNAL HEAD, SEE PLANS
11	1	90° ELBOW WITH LOCKING DEVICE (SEE T1001-2)
12	1	1-1/2"(38 mm) I.D. PIPE 90° ELBOW, DRILL AND TAP FOR SETSCREW
13	2	1/2" X 2" (13 mm X 50 mm) GALVANIZED STEEL BOLT 13-UNC WITH FLAT
		WASHER AND LOCK WASHER.
* 14	1	1-1/2" (38 mm) PIPE NIPPLE 9-1/2" (242 mm) - FOR PEDESTRIAN SIGNAL
		UNITS ONLY (FOR ILLUMINATED MESSAGE, USE 25-3/8" (645 mm) PIPE)

NIPPLE LENGTH
(ITEM 3)

SIGNAL FACE	C	J	F	M	N	G
NIPPLE LENGTH	24 (610 mm)	28-5/8 (726 mm)	37-7/8 (962 mm)	38-3/4 (984 mm)	43-3/8 (1.105 m)	52-5/8 (1.336 m)

NOTES:

1. LOCK NIPPLE LENGTH SHALL BE 1-1/8" (28 mm) FOR 8" (205 mm) HEADS AND 1-3/4" (44 mm) FOR 12" (305 mm) HEADS.
2. FOR POLE DRILLING DETAIL SEE T 418.

* SPECIAL NIPPLE LENGTH FOR USE ONLY WITH PED. SIGNAL SINGLE HEAD UNITS.

3. MOUNT TO POLE USING 1/2" X 2" (13 mm X 50 mm) GALVANIZED STEEL BOLT 13-UNC WITH FLAT WASHER AND LOCK WASHER.

ISSUED:		STANDARD DETAIL		DETAIL NO.
7/89	CITY OF TUCSON FOUNDED 1775	TYPE V MOUNTING ASSEMBLY	THE SEAL of PIMA COUNTY ARIZONA	T 903
REVISED: 11/04				SHEET 2 OF 2

TS9-3-2.DWG 12/07/00 13:34

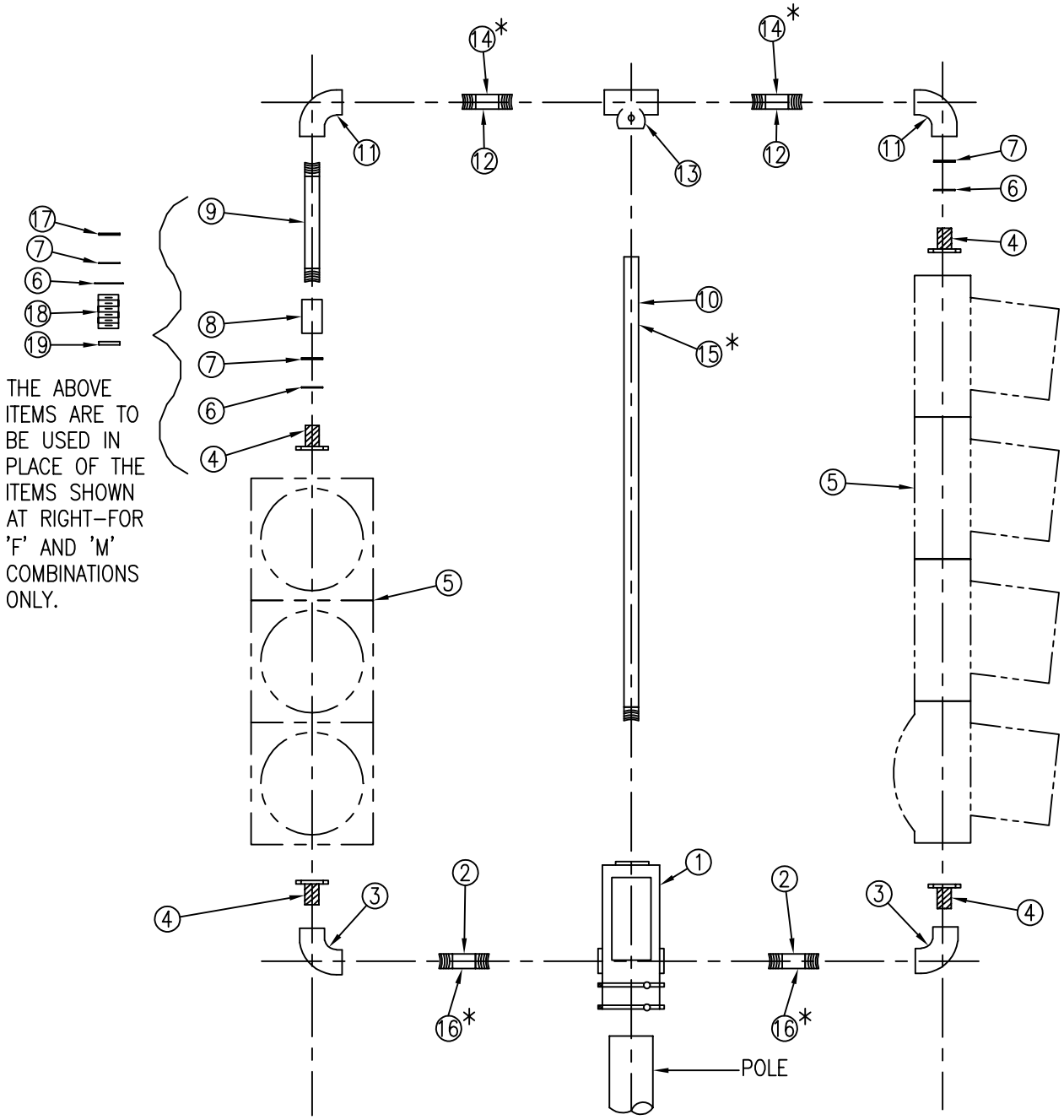

ISSUED:		STANDARD DETAIL		DETAIL NO.
7/89		TYPE VI MOUNTING ASSEMBLY		T 904
REVISED:				
10/02				SHEET 1 OF 2

TS9–4–1.DWG 12/07/00 13:35

LIST OF MATERIAL		
ITM.	QUA.	DESCRIPTION
1	1	TERMINAL COMPARTMENT POLE TOP MTG. T1004-2
2	2	1-1/2" (38 mm) I.D. PIPE NIPPLE, 6" (150 mm) LONG
3	2	90° ELL WITH LOCKING DEVICE (SEE T1001-2)
4	4	1-1/2" (38 mm) LOCK NIPPLE, SEE NOTE 1
5	2	SIGNAL HEAD, SEE PLANS
6	2	NEOPRENE WASHER
7	2	FLAT WASHER
8	1	1-1/2" (38 mm) PIPE COUPLING, AS REQUIRED
9	1	1-1/2" (38 mm) PIPE NIPPLE, SEE TABLE
10	1	1-1/2" (38 mm) CENTER PIPE, SEE TABLE
11	2	90° ELBOW, 1-1/2" (38 mm)
12	2	1-1/2" (38 mm) PIPE NIPPLE, 6-1/2" (165 mm) LONG
13	1	PIPE TEE, DRILL AND TAP FOR SETSCREW
* 14	2	1-1/2" (38 mm) PIPE NIPPLE, 12-1/2" (318 mm) LONG FOR PED SIGNAL HEADS
* 15	1	1-1/2" (38 mm) PIPE NIPPLE, 9-1/2" (242 mm) LONG FOR PED SIGNAL HEADS
* 16	2	1-1/2" (38 mm) PIPE NIPPLE, 12" (305 mm) LONG FOR PED SIGNAL HEADS
17	1	CONDUIT LOCK NUT (FOR 'F' AND 'M' COMBINATION ONLY)
18	1	1-1/2" (38 mm) PIPE NIPPLE, 3" (75 mm) LONG (FOR 'F' AND 'M' COMBINATION ONLY)
19	1	MALLEABLE HEX NUT (FOR 'F' AND 'M' COMBINATION ONLY)

TABLE TO BE USED FOR FINDING NIPPLE LENGTH

(USE FOR ITEM 9 ONLY)

SIGNAL FACES COMBINATION	C	J	F	M	N	G
C	ø		12-7/8 (327 mm)	13-3/4 (349 mm)		27-5/8 (701 mm)
J	3-5/8 (92 mm)		8-1/4 (209 mm)	9-1/8 (232 mm)		23 (584 mm)
F	12-7/8 (327 mm)		ø	3 (75 mm)		13-3/4 (349 mm)
M	13-3/4 (349 mm)		3 (75 mm)	ø		12-7/8 (327 mm)
N	18-3/8 (465 mm)		4-1/2 (115 mm)	3-5/8 (92 mm)		8-1/4 (209 mm)
G	27-5/8 (701 mm)		13-3/4 (349 mm)	12-7/8 (327 mm)		ø

(USE FOR ITEM 10 ONLY)

SIGNAL FACE	C	J	F	M	N	G
NIPPLE LENGTH	24 (610 mm)		37-7/8 (962 mm)	38-3/4 (984 mm)		52-5/8 (1.336 m)

THREADS ON ONE END ONLY

NOTES:

1. LOCK NIPPLE LENGTHS HALL BE 1-1/8" (28 mm) FOR 8" (205 mm) HEAD AND 1-3/4" (44 mm) FOR 12" (305 mm) HEAD

* SPECIAL NIPPLE LENGTH FOR USE ONLY WITH PED. SIGNAL SINGLE HEAD UNITS AND TYPE Q FACE SIGNAL UNITS.

ISSUED:	STANDARD DETAIL	DETAIL NO.
7/89	TYPE VI MOUNTING ASSEMBLY	T 904
REVISED: 11/04		SHEET 2 OF 2

TS9-4-2.DWG 12/07/00 13:36

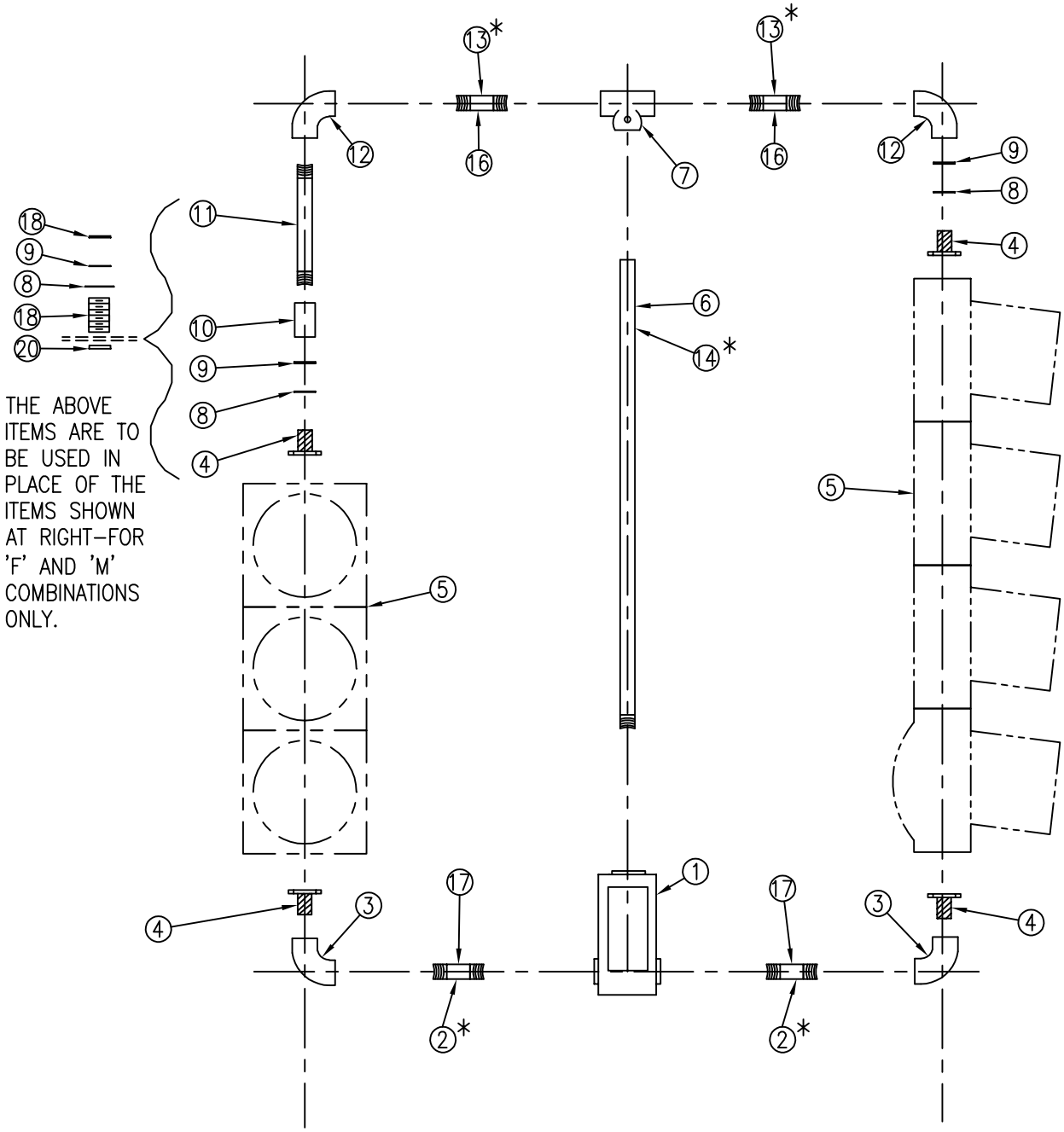

ISSUED:		STANDARD DETAIL		DETAIL NO.
7/89		TYPE VII MOUNTING ASSEMBLY		T 905
REVISED:				
11/04				SHEET 1 OF 2

TS9–5–1.DWG 12/07/00 13:41

	LIST OF MATERIAL	
ITM.	QUA.	DESCRIPTION
1	1	TERMINAL COMPARTMENT FOR SIDE MTG. (T1004-1)
* 2	2	1-1/2" (38 mm) PIPE NIPPLE, 11-1/2" (292 mm) LONG (FOR PED. SIGNAL HEADS)
3	2	90° ELBOW WITH LOCKING DEVICE (T1001-2)
4	4	1-1/2" (38 mm) LOCK NIPPLE, SEE NOTE 1
5	2	SIGNAL HEAD, SEE PLANS
6	2	CENTER PIPE, SEE TABLE
7	2	TEE, DRILL AND TAP FOR SETSCREW
8	1	NEOPRENE WASHER
9	1	FLAT WASHER
10	1	1-1/2" (38 mm) PIPE COUPLING, SEE TABLE
11	2	1-1/2" (38 mm) PIPE NIPPLE, SEE TABLE
12	2	90° ELBOW
* 13	1	1-1/2" (38 mm) PIPE NIPPLE, 12" (305 mm) LONG (FOR PED. SIGNAL HEADS)
* 14	2	1-1/2" (38 mm) PIPE NIPPLE, 9-1/2" (242 mm) LONG. (FOR PED SIGNAL HEADS
15	1	1/2" X 2" (13 mm X 50 mm) GALV. STEEL BOLT 13-UNC W/ FLAT WASHER & LOCK WASHER
16	2	1-1/2" (38 mm) PIPE NIPPLE, 16-1/2" (418 mm) LONG
17	2	1-1/2" (38 mm) PIPE NIPPLE, 16" (405 mm) LONG
18	1	CONDUIT LOCK NUT (FOR 'F' AND 'M' COMBINATION)
19	1	1-1/2" (38 mm) PIPE NIPPLE, 3" (75 mm) LONG (FOR 'F' AND 'M' COMBINATION ONLY)
20	1	MALLEABLE HEX NUT (FOR 'F' AND 'M' COMBINATION ONLY)

(ITEM 11)

SIGNAL FACES COMBINATION	C	F	M	N	G
C	ø	12-7/8"(327 mm)	13-3/4"(349 mm)	18-3/8"(465 mm)	27-5/8"(701 mm)
J	3-5/8"(92 mm)	8-1/4"(209 mm)	9-1/8"(232 mm)	13-3/4"(349 mm)	23"(585 mm)
F	12-7/8"(327 mm)	N/A	3"(75 mm)	4-1/2"(115 mm)	13-3/4"(349 mm)
M	13-3/4"(349 mm)	3"(75 mm)	N/A	3-5/8"(92 mm)	12-7/8"(327 mm)
N	18-3/8"(465 mm)	4-1/2"(115 mm)	3-5/8"(92 mm)	N/A	8-1/4"(209 mm)
G	27-5/8"(701 mm)	13-3/4"(349 mm)	12-7/8"(327 mm)	8-1/4"(209 mm)	N/A

TABLES TO BE USED FOR FINDING NIPPLE LENGTHS

(ITEM 6)

SIGNAL FACES COMBINATION	C	F	M	N	G
C	24" (610 mm)	37-7/8"(962 mm)	38-3/4" (984 mm)	43-3/8" (1.105 m)	52-5/8" (1.336 m)
J	28-5/8"(726 mm)	37-7/8"(962 mm)	38-3/4" (984 mm)	43-3/8" (1.105 m)	52-5/8" (1.336 m)
F	37-7/8"(962 mm)	37-7/8"(962 mm)	38-3/4"(984 mm)	43-3/8" (1.105 m)	52-5/8" (1.336 m)
M	38-3/4"(984 mm)	38-3/4"(984 mm)	38-3/4"(984 mm)	43-3/8" (1.105 m)	52-5/8" (1.336 m)
N	43-3/8"(1.105 m)	43-3/8"(1.105 m)	43-3/8"(1.105 m)	43-3/8" (1.105 m)	52-5/8" (1.336 m)
G	52-5/8"(1.336 m)	52-5/8"(1.336 m)	52-5/8"(1.336 m)	52-5/8" (1.336 m)	52-5/8" (1.336 m)

THREADS ON ONE END ONLY

NOTES:

1. LOCK NIPPLE LENGTHS SHALL BE 1-1/8" (28 mm) FOR 8" (205 mm) HEAD AND 1-3/4" (44 mm) FOR 12" (305 mm) HEAD.
2. FOR POLE DRILLING DETAIL, SEE T 418.

* SPECIAL NIPPLE LENGTH FOR USE ONLY WITH PED. SIGNAL SINGLE HEAD UNITS AND TYPE Q SIGNAL UNITS.

ISSUED:	STANDARD DETAIL	DETAIL NO.
7/89	TYPE VII MOUNTING ASSEMBLY	T 905
REVISED: 11/04		SHEET 2 OF 2

TS9-5-2.DWG 12/07/00 13:41

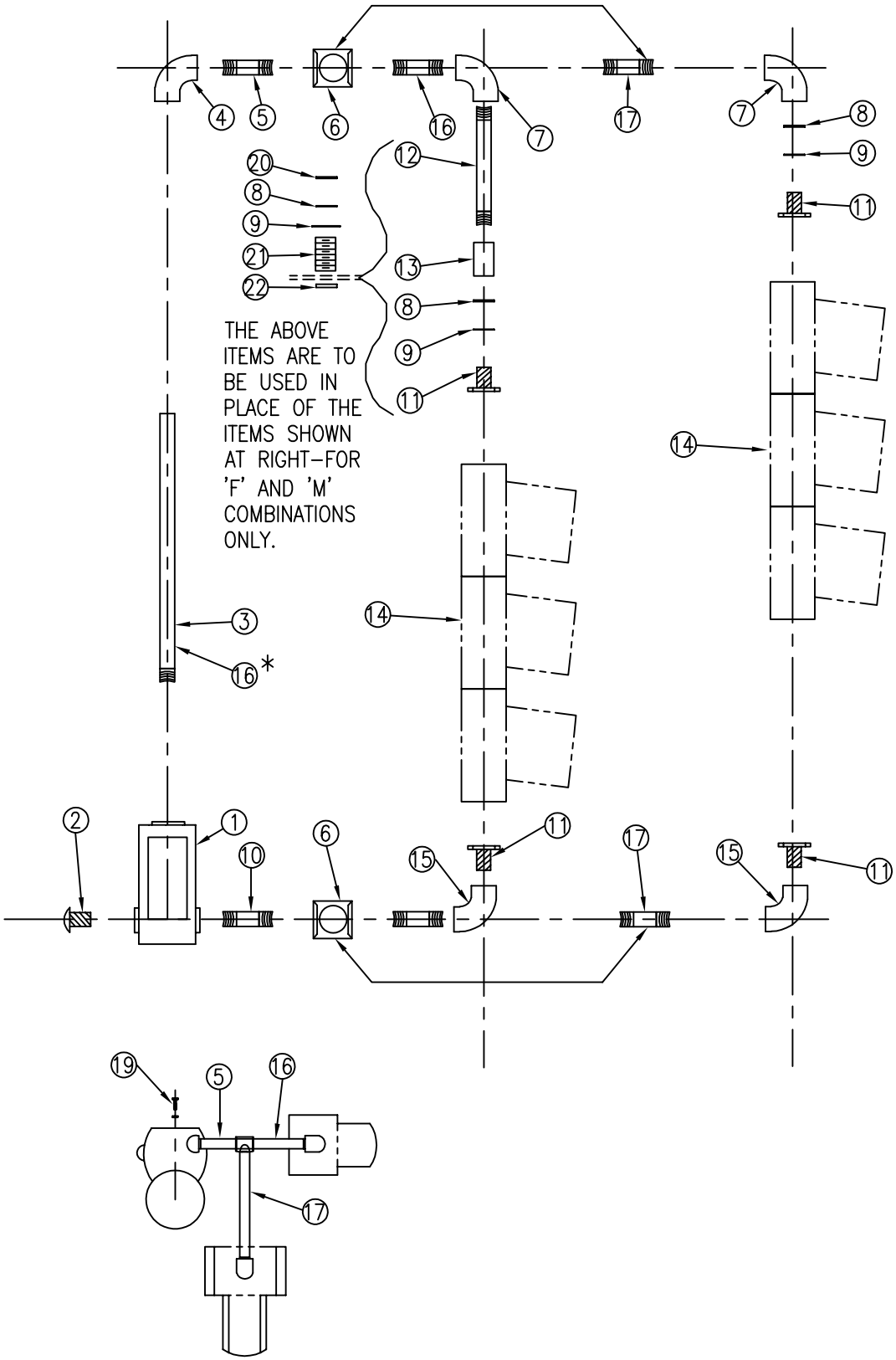

ISSUED:		STANDARD DETAIL		DETAIL NO.
7/89		TYPE VIII MOUNTING ASSEMBLY		T 906
REVISED:				
11/04				SHEET 1 OF 2

TS9–6–1.DWG 12/07/00 13:45

LIST OF MATERIAL		
ITM.	QUA.	DESCRIPTION
1	1	TERMINAL COMPARTMENT FOR SIDE MTG. (1004-1)
2	1	ORNAMENTAL CAP (SEE T1001-6)
3	1	1-1/2" (38 mm) PIPE, SEE TABLE
4	1	1-1/2" (38 mm) 90° ELBOW, DRILL AND TAP FOR SETSCREW
5	1	1-1/2" (38 mm) I.D. PIPE NIPPLE, 12-1/2" (318 mm) LONG
6	1	1-1/2" (38 mm) PIPE TEE
7	2	90° ELBOW
8	2	FLAT WASHER
9	2	NEOPRENE WASHER
10	1	1-1/2" (38 mm) I.D. PIPE NIPPLE, 12" (305 mm) LONG
11	4	1-1/2" (38 mm) LOCK NIPPLE, SEE NOTE 1
12	1	1-1/2" (38 mm) I.D. PIPE NIPPLE, SEE TABLE
13	1	1-1/2" (38 mm) COUPLING, AS REQUIRED
14	2	SIGNAL HEAD, SEE PLANS
15	2	90° ELBOW WITH LOCKING DEVICE (SEE T1001-2)
16	2	1-1/2" (38 mm) I.D. PIPE NIPPLE, 12" (305 mm) LONG
17	2	1-1/2" (38 mm) I.D. PIPE NIPPLE, 12" (305 mm) LONG
* 18	1	1-1/2" (38 mm) PIPE NIPPLE, 9-1/2" (242 mm) LONG, PED SIGNAL ONLY
19	2	1/2" X 2" (13 mm X 50 mm) GALV. STEEL BOLT 13-UNC W/ FLAT AND LOCK WASHER
20	1	CONDUIT LOCK NUT (FOR 'F' & 'M' COMBINATION ONLY)
21	1	1-1/2" (38 mm) I.D. PIPE NIPPLE, 3" (75 mm) LONG (FOR 'F' & 'M' COMB. ONLY)
22	1	MALLEABLE HEX NUT (FOR 'F' AND 'M' COMBINATION ONLY)

TABLES TO BE USED FOR FINDING NIPPLE LENGTHS
(ITEM 12)

SIGNAL FACES COMBINATION	C	J	F	M	N	G
C	NA	3-5/8" (92 mm)	12-7/8" (327 mm)	13-3/4" (349 mm)	18-3/8" (465 mm)	27-5/8" (701 mm)
J	3-5/8" (92 mm)	NA	8-1/4" (209 mm)	9-1/8" (232 mm)	13-3/4" (349 mm)	23" (585 mm)
F	12-7/8" (327 mm)	8-1/4" (209 mm)	NA	3" (75 mm)	4-1/2" (115 mm)	13-3/4" (349 mm)
M	13-3/4" (349 mm)	9-1/8" (232 mm)	3" (75 mm)	NA	3-5/8" (92 mm)	12-7/8" (327 mm)
N	18-3/8" (465 mm)	13-3/4" (349 mm)	4-1/2" (115 mm)	3-5/8" (92 mm)	NA	8-1/4" (209 mm)
G	27-5/8" (701 mm)	23" (584 mm)	13-3/4" (349 mm)	12-7/8" (327 mm)	8-1/4" (209 mm)	NA

NIPPLE LENGTH
(ITEM 3)

SIGNAL FACE	C	J	F	M	N	G
NIPPLE LENGTH	24" (610 mm)	28-5/8" (726 mm)	37-7/8" (962 mm)	38-3/4" (984 mm)	43-3/8" (1.105 m)	52-5/8" (1.336 m)

NOTES:

1. LOCK NIPPLE LENGTH SHALL BE 1-1/8" (28 mm) FOR 8" (205 mm) HEADS AND 1-3/4" (44 mm) FOR 12" (305 mm) HEADS.
2. FOR PIPE DRILLING DETAIL SEE T 418.

* SPECIAL NIPPLE LENGTH FOR USE ONLY WITH PED. SIGNAL SINGLE HEAD UNITS AND TYPE Q FACE SIGNAL UNITS.

ISSUED:		STANDARD DETAIL		DETAIL NO.
7/89	CITY OF TUCSON FOUNDED 1775	TYPE VIII MOUNTING ASSEMBLY	THE SEAL of PIMA COUNTY ARIZONA	T 906
REVISED: 11/04				SHEET 2 OF 2

TS9-6-2.DWG 12/07/00 13:46

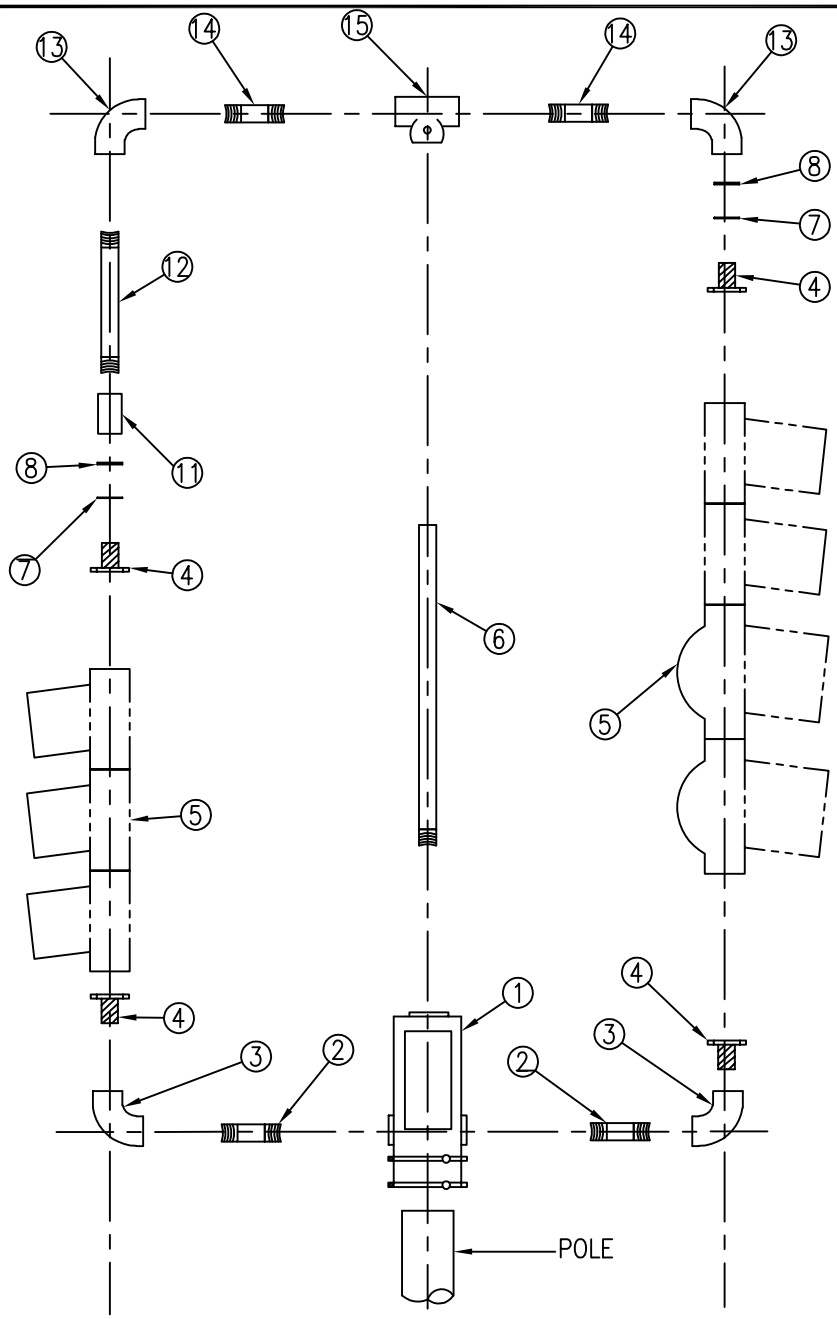

FRONT ELEVATION

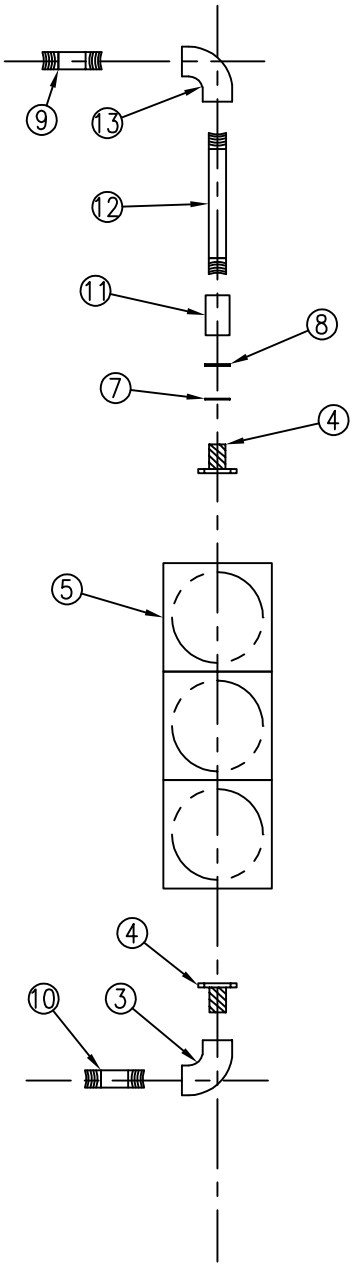

SIDE ELEVATION

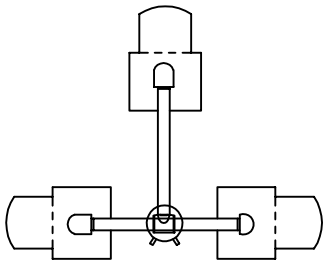

MOUNTING ORIENTATION PLAN

ISSUED:		STANDARD DETAIL		DETAIL NO.
7/89		TYPE IX MOUNTING ASSEMBLY		T 907
REVISED:				
10/02				SHEET 1 OF 2

TS9-7-1.DWG 12/07/00 14:31

LIST OF MATERIAL		
ITM.	QUA.	DESCRIPTION
1	1	TERMINAL COMPARTMENT POLE TOP MTG. T1004-2
2	2	1-1/2" (38 mm) I.D. PIPE NIPPLE, 6" (150 mm) LONG
3	2	90° ELBOW WITH LOCKING DEVICE (SEE T1001-2)
4	4	1-1/2" (38 mm) LOCK NIPPLE, SEE NOTE 1 AND NOTE 2
5	2	SIGNAL HEAD, SEE PLANS
6	2	1-1/2" (38 mm) PIPE, SEE TABLE
7	2	NEOPRENE WASHER
8	1	FLAT WASHER
9	1	1-1/2" (38 mm) PIPE NIPPLE, 12-1/2" (318 mm) LONG
10	1	1-1/2" (38 mm) PIPE NIPPLE, 12" (305 mm) LONG
11	2	1-1/2" (38 mm) PIPE COUPLING AS REQUIRED
12	2	1-1/2" (38 mm) PIPE NIPPLE, SEE TABLE
13	1	90° ELBOW
14	2	1-1/2" (38 mm) PIPE NIPPLE, 6-1/2" (165 mm) LONG
15	1	TEE WITH SIDE OUTLET, DRILL AND TAP FOR SETSCREW

TABLE TO BE USED FOR FINDING NIPPLE LENGTH

(USE FOR ITEM 12 ONLY)

SIGNAL FACES COMBINATION	C	J	F	M	N	G
C	NA		12-7/8"(327 mm)	13-3/4"(349 mm)	18-3/8"(465 mm)	27-5/8"(701 mm)
J	3-5/8"(92 mm)		8-1/4" (209 mm)	9-1/8"(232 mm)	13-3/4"(349 mm)	23"(585 mm)
F	12-7/8"(327 mm)		NA	3"(75 mm)	4-1/2"(115 mm)	13-3/4"(349 mm)
M	13-3/4"(349 mm)		3"(75 mm)	NA	3-5/8"(92 mm)	12-7/8"(327 mm)
N	18-3/8"(465 mm)		4-1/2"(115 mm)	3-5/8" (92 mm)	NA	8-1/4"(209 mm)
G	27-5/8"(701 mm)		13-3/4"(349 mm)	12-7/8"(327 mm)	8-1/4"(209 mm)	NA

NIPPLE LENGTH
(ITEM 3)

SIGNAL FACE	C		F	M	N	G
NIPPLE LENGTH	24"(610 mm)		37-7/8"(962 mm)	38-3/4"(984 mm)	43-3/8"(1.105 m)	52-5/8"(1.336 m)

THREADS ON ONE END ONLY

NOTES:

1. LOCK NIPPLE LENGTH SHALL BE 1-1/8" (28 mm) FOR 8" (205 mm) HEADS AND 1-3/4" (44 mm) FOR 12" (305 mm) HEADS.
2. LOCK NUT IS REQUIRED IN PLACE OF LOCK NIPPLE WHEN 'F' FACE AND 'M' FACE ARE HUNG ON SAME FRAME.

ISSUED:	STANDARD DETAIL	DETAIL NO.
7/89	TYPE IX MOUNTING ASSEMBLY	T 907
REVISED: 11/04		SHEET 2 OF 2

TS9-7-2.DWG 12/07/00 14:31

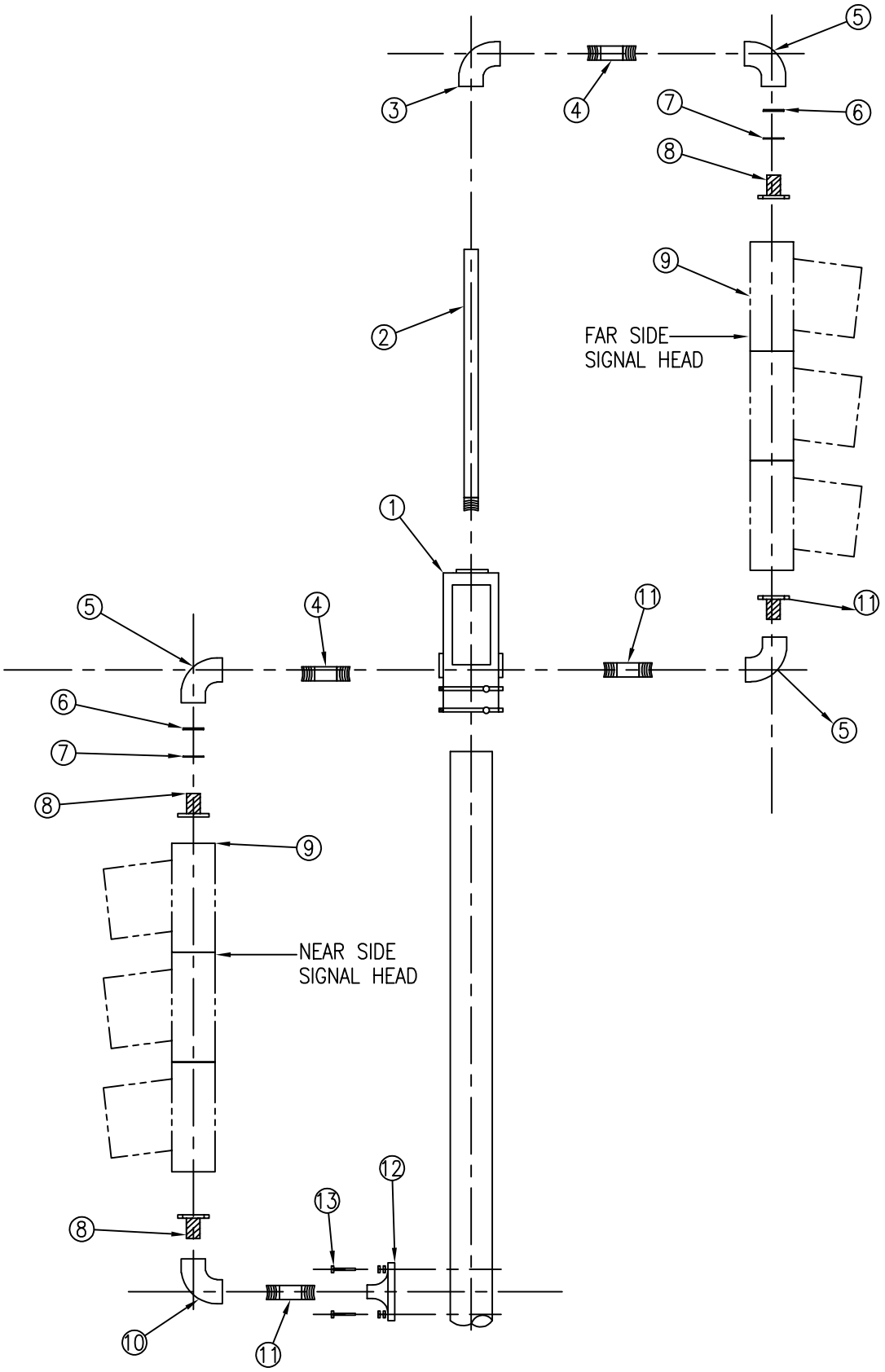

ISSUED:		STANDARD DETAIL		DETAIL NO.
7/89		TYPE X MOUNTING ASSEMBLY		T 908
REVISED:				
10/02				SHEET 1 OF 2

TS9-8-1.DWG 12/07/00 14:32

LIST OF MATERIAL		
ITM.	QUA.	DESCRIPTION
1	1	POLE TOP MOUNTED TERMINAL COMPARTMENT T1004-2
2	1	CENTER PIPE, 1-1/2" X 38" (38 mm X 965 mm) THREADED ONE END
3	1	ELBOW, 1-1/2" (38 mm), 90°, REAMED, DRILLED, AND TAPPED FOR SCREW
4	2	NIPPLE, 1-1/2" X 14-1/2" (38 mm X 368 mm)
5	2	ELBOW, 1-1/2" (38 mm), 90° (3 REQ'D WHEN OPTICAL SIGNAL USED)
6	2	FLAT WASHER
7	2	NEOPRENE WASHER
8	4	LOCK NIPPLE, 1-1/2" (38 mm), SEE NOTE No. 1
9	2	SIGNAL HEAD, SEE PLANS
10	2	ELBOW, 1-1/2" (38 mm), 90°, WITH LOCKING DEVICE
11	2	NIPPLE, 1-1/2" X 14" (38 mm X 355 mm)
12	1	POLE PLATE (T1003-2)
13	2	1/2" X 2" (13 mm X 50 mm) GALV. STEEL BOLT 13-UNC W/ FLAT AND LOCK WASHERS
14	2	CLOSE NIPPLE, 1-1/2" X 1-3/4" (38 mm X 44 mm)
15	1	PROGRAMMED VISIBILITY SIGNAL ASSEMBLY

* THIS ITEM IS NOT REQUIRED FOR PROGRAMMED VISIBILITY SIGNAL

(USE FOR ITEM 10 ONLY)

* SIGNAL FACE	C	J	F	M	N	G	H
NIPPLE LENGTH	24" (610 mm)		37-7/8" (962 mm)	38-3/4" (984 mm)		52-5/8" (1.336 m)	53-1/2" (1.359 m)

NOTES:

1. LOCK NIPPLE LENGTHS HALL BE 1-1/8" (28 mm) FOR 8" (205 mm) HEAD AND 1-3/4" (44 mm) FOR 12" (305 mm) HEAD

ISSUED:		STANDARD DETAIL		DETAIL NO.
7/89	CITY OF TUCSON FOUNDED 1775	TYPE X MOUNTING ASSEMBLY	THE SEAL of PIMA COUNTY ARIZONA	T 908
REVISED: 11/04				SHEET 2 OF 2

TS9-8-2.DWG 12/07/00 14:32

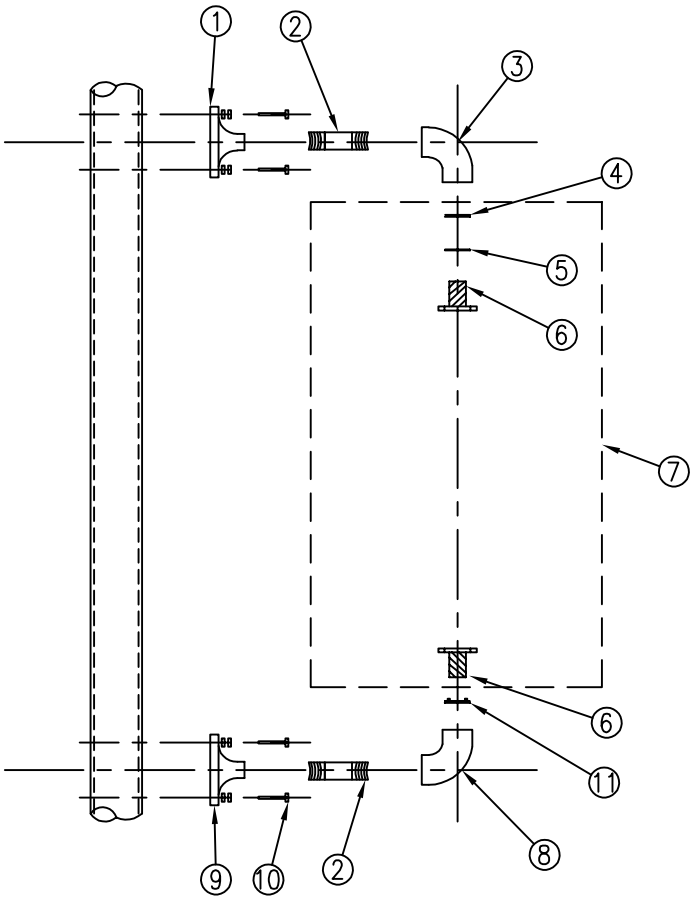

LIST OF MATERIAL		
ITM.	QUA.	DESCRIPTION
1	1	POLE PLATE (T1003-2)
2	2	1-1/2" (38 mm) PIPE NIPPLE, SEE TABLE BELOW
3	1	90° ELBOW
4	1	FLAT WASHER
5	1	NEOPRENE WASHER
6	2	LOCK NIPPLE, 1-1/8" (28 mm) LONG
7	1	SIGNAL HOUSING, SEE PLANS
8	1	90° ELBOW WITH LOCKING DEVICE (T1001-2)
9	1	POLE PLATE WITH WIRE GUIDE (T1003-1)
10	4	1/2" X 2" (13 mm X 50 mm) GALV. STEEL BOLT 13 UNC W/ FLAT AND LOCK WASHERS
11	1	LOCK RING USE ONLY WHEN ITEM 7 CONTAINS NO LOCKING TEETH
12	2	CLOSE NIPPLE T1001-5

NOTE: FOR POLE DRILLING DETAILS, SEE T 418

ISSUED:		STANDARD DETAIL		DETAIL NO.
7/89		TYPE XI MOUNTING ASSEMBLY		T 909
REVISED:				
11/04				SHEET 1 OF 1

TS9-9.DWG 12/07/00 14:32

NOTE: FOR ADAPTER RING SEE SHEET 2 OF T 910.

E DESIGNATES 1-1/2" (38 mm) PIPE THREAD TOP

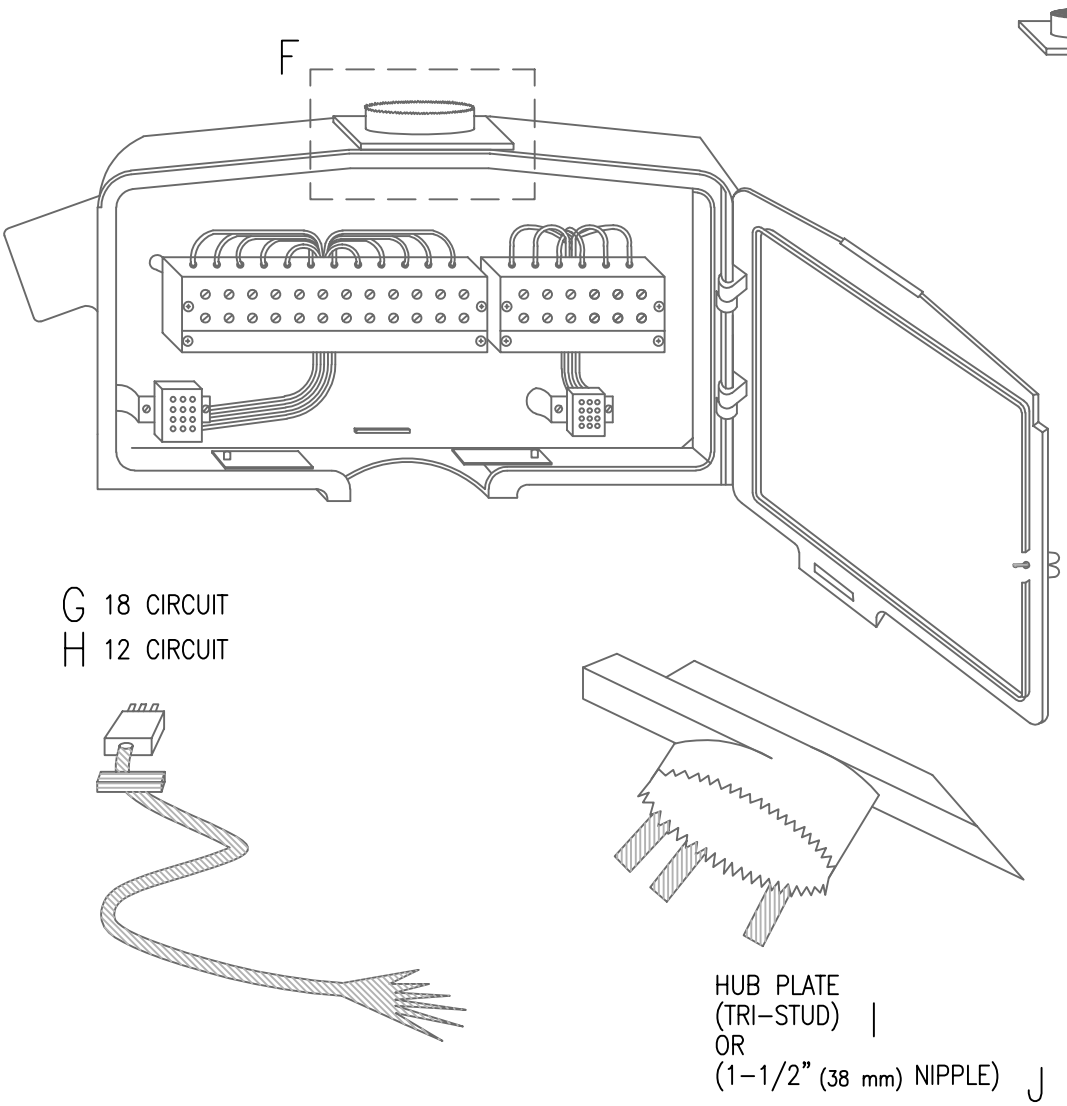

THE SINGLE DOOR DISCONNECT HOUSING CAN BE FURNISHED WITH 12 OF 18 TERMINAL CONNECTORS. THE HOUSING HAS THE SAME INTERNAL AREA AS THE DOUBLE DOOR DISCONNECT HOUSING THUS ALLOWING EASY ACCESS TO THE TERMINALS. CORRESPONDING PLUG IN CONNECTORS LEAD TO THE SIGNAL HEAD. THE HUB PLATE IS INTERCHANGEABLE TO TAKE EITHER THE TRI-STUB WITH CAST IN SHURLOCK SERRATIONS OR 1-1/2" (38 mm) NIPPLE ADAPTER. THE TOP OF THE HOUSING HAS THE SHURLOCK SERRATION TO MATE POSITIVELY WITH THE ADJUSTABLE HANGER. IN THE EVENT THAT A 1-1/2" (38 mm) PIPE IS USED FOR THE HANGER, THE TOP OF THE HOUSING CAN BE FURNISHED WITH A 1-1/2" (38 mm) HUB. THE SIDE ENTRANCE HOLES CAN RECEIVE A 1-1/2" (38 mm) PLASTIC REDUCER TO ADJUST TO VARIOUS WIRE DIAMETERS, THUS IMPROVING THE WATER TIGHTNESS. THE HOUSING HAS APPROXIMATELY 350 CUBIC INCH (0.0057 m^3) OF VOLUME. THE ENTIRE UNIT IS HIGH TENSILE CAST ALUMINUM WITH STAINLESS STEEL HARDWARE. MOVEMENT OF THE HUB PLATE IS PREVENTED BY TIGHT FITTING WEDGES ON THE HOUSING AND DOOR, PLUS TOW POSITIVE LATCHES.

ISSUED:		STANDARD DETAIL		DETAIL NO.
7/89	CITY OF TUCSON FOUNDED 1775	SPAN WIRE MOUNTING TERMINAL HANGER	THE SEAL of PIMA COUNTY ARIZONA	T 910
REVISED: 10/02				SHEET 1 OF 2

TS9-10-1.DWG 12/07/00 14:34

HANGER SHALL HAVE ADJUSTABLE IN 1" (25 mm) INCREMENTS ALLOWING QUICK INSTALLATION WITHOUT PIPE CUTTING THREADING AND RETHREADING.

THE LOWER HALF OF THE HANGER SHALL BE PROVIDED WITH A TRI-STUD ARRANGEMENT AND SHURLOCK SERRATION FOR POSITIVE LOCKING OR 1-1/2" (38 mm) PIPE NIPPLE.

THE UNIT SHALL BE FURNISHED COMPLETE WITH THE SAME MOUNTING HARDWARE AS WITH THE ADJUSTABLE SIGNAL HANGER.

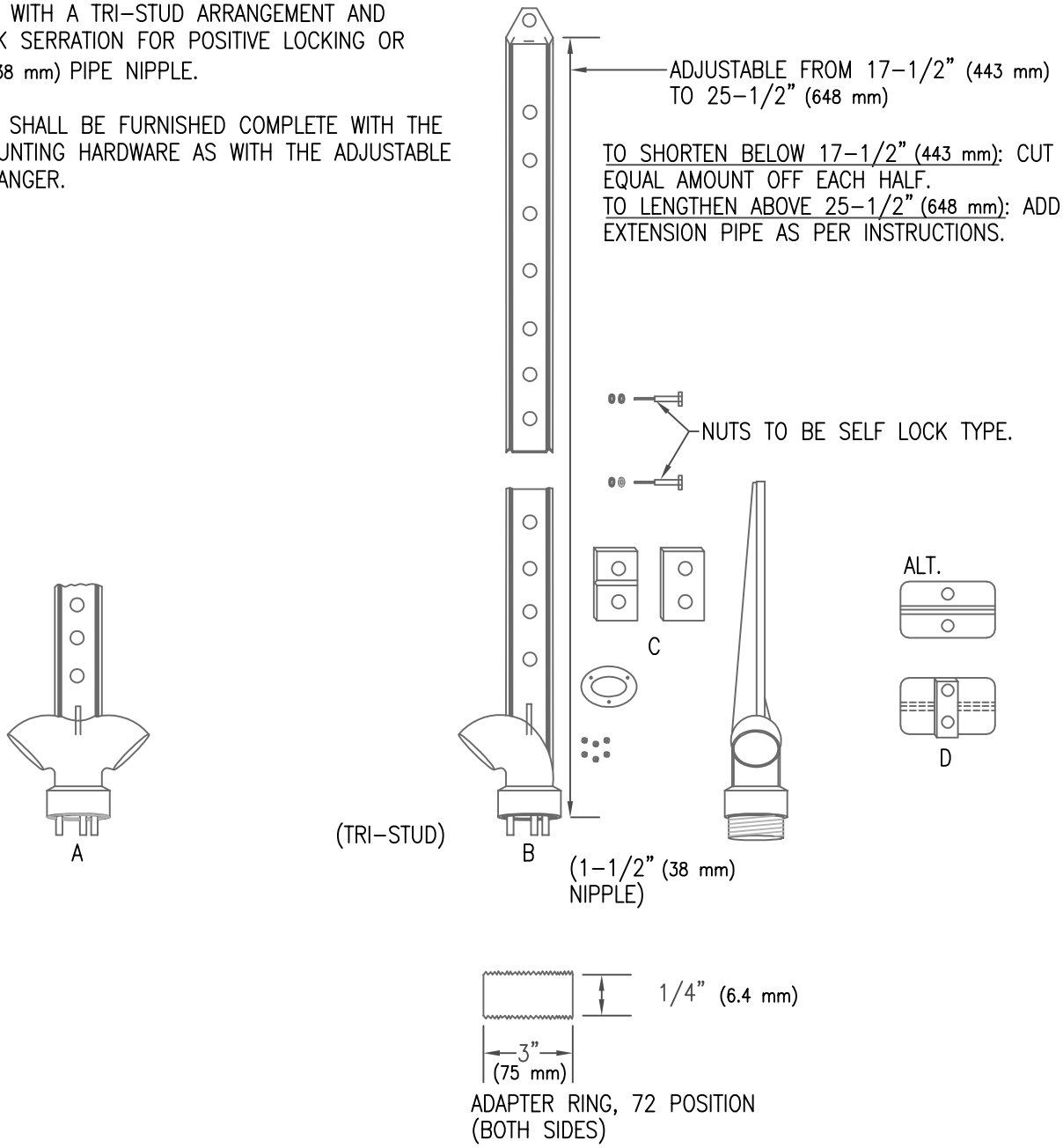

NOTE:

72 POSITION ADAPTER RING TO BE SUPPLIED WITH EACH ASSEMBLY.

ISSUED:		STANDARD DETAIL		DETAIL NO.
7/89		SPAN WIRE MOUNTING TERMINAL HANGER		T 910
REVISED:				
11/04				SHEET 2 OF 2

TS9-10-2.DWG 12/07/00 14:35

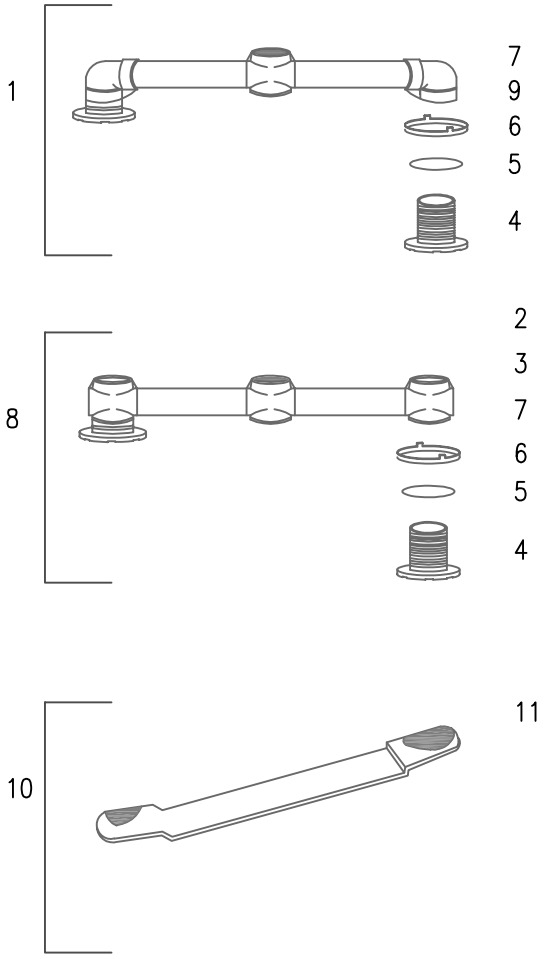

TWO WAY MOUNTING FOR
SPAN WIRE AND MAST ARM

ITEM	DESCRIPTION
1	UPPER ARM FOR 2-WAY WITH CROSSES
2	UNIVERSAL CROSS CONNECTOR
3	ROSETTE CAP
4	1-1/2" (38 mm) CAST NIPPLE
5	RUBBER O-RING
6	SERRATED LOCKING RING
7	SET SCREW, 1/4" (6.4 mm)-20 X 3/8" (9.5 mm) LONG, SQUARE HEAD, CUP POINT
8	UPPER ARM ASSEMBLY FOR 2-FACE SIGNAL
9	CABLE GUIDE ELBOW
10	LOWER FLAT ARM ASSEMBLY FOR 2-FACE SIGNAL
11	CENTERING WASHER ASSEMBLY

ISSUED:		STANDARD DETAIL		DETAIL NO.
7/89		2-WAY SPAN WIRE MOUNTING ASSEMBLY		T 911
REVISED:				
10/02				SHEET 1 OF 1

TS9-11.DWG 12/07/00 14:35

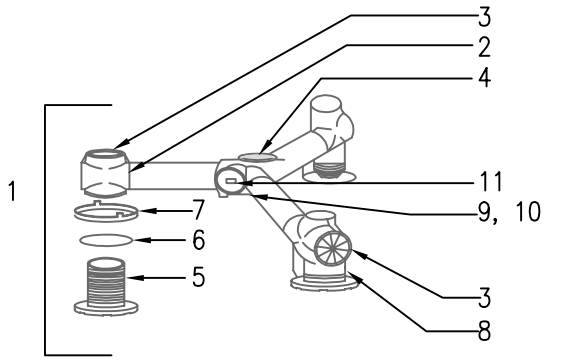

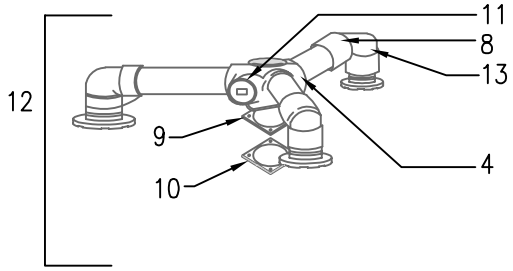

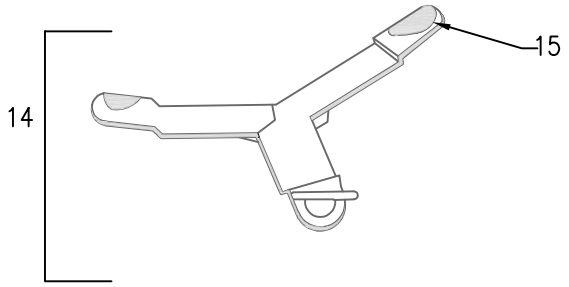

THREE- WAY MOUNTING FOR SPAN WIRE AND MAST ARM

ITEM	DESCRIPTION
1	UPPER ARM FOR 3-WAY WITH CROSSES
2	UNIVERSAL CROSS CONNECTOR
3	ROSETTE CAP
4	6-WAY CENTER SUPPORT WITH 1-1/2" (38 mm) HUBS
5	1-1/2" (38 mm) CAST NIPPLE
6	RUBBER O-RING
7	SERRATED LOCKING RING
8	SET SCREW, 1/4" (6.4 mm)-20 X 3.8" (9.5 mm) LONG, SQUARE HEARD, CUP POINT
9	COVER GASKET
10	BLANKET COVER
11	1-1/2" (38 mm) PIPE PLUG
12	UPPER ARM ASSEMBLY FOR 3-FACE SIGNAL
13	CABLE GUIDE ELBOW
14	LOWER FLAT ARM ASSEMBLY FOR 3-FACE SIGNAL
15	CENTERING WASHER ASSEMBLY

ISSUED:		STANDARD DETAIL		DETAIL NO.
7/89	CITY OF TUCSON FOUNDED 1775	3-WAY SPAN WIRE MOUNTING ASSEMBLY	THE SEAL of PIMA COUNTY ARIZONA	T 912
REVISED: 10/02				SHEET 1 OF 1

TS9-12.DWG 12/07/00 14:36

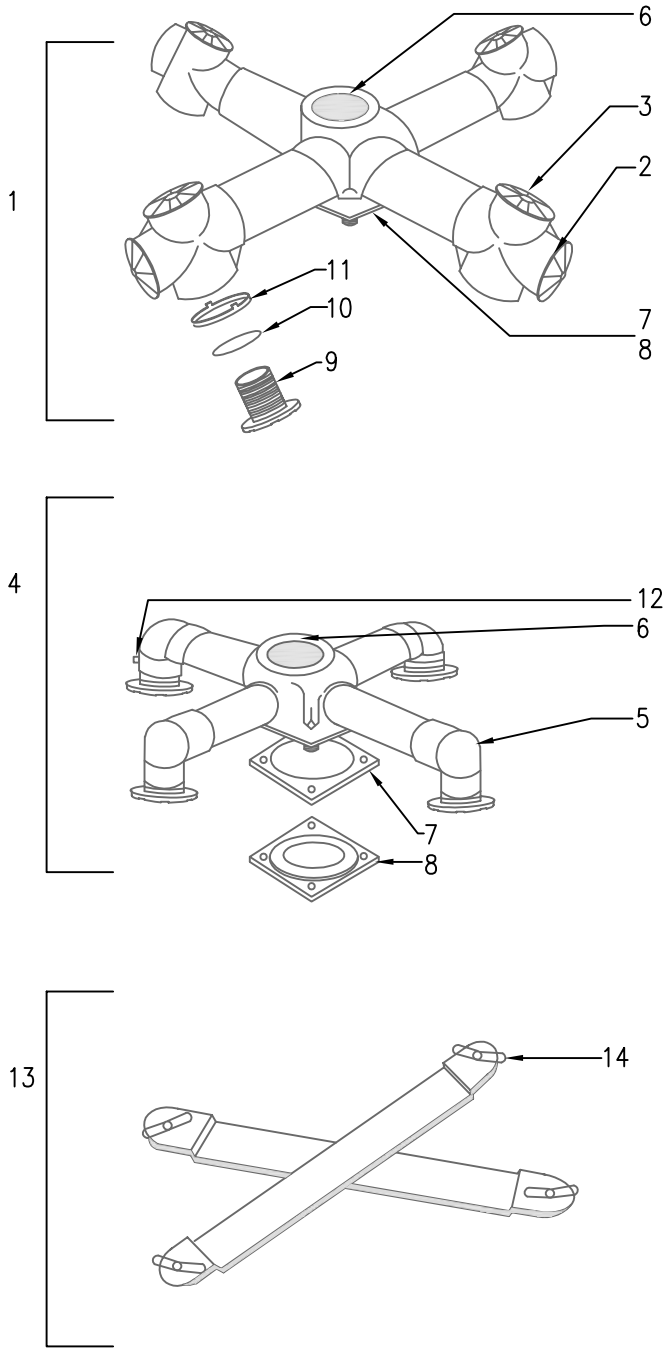

FOUR–WAY MOUNTING FOR
SPAN WIRE AND MAST ARM

ITEM	DESCRIPTION
1	UPPER ARM FOR 4–WAY WITH CROSSES
2	UNIVERSAL CROSS CONNECTOR
3	ROSETTE CAP
4	UPPER ARM ASSEMBLY FOR 4–FACE SIGNAL
5	CABLE GUIDE ELBOW
6	4–WAY CENTER SUPPORT WITH 1–1/2" (38 mm) HUBS
7	COVER GASKET
8	BLANK COVER
9	1–1/2" (38 mm) CAST NIPPLE
10	RUBBER O–RING
11	SERRATED LOCKING RING
12	SET SCREW. 1/4" (6.4 mm)–20 X 3/8" (9.5 mm) LONG, SQUARE HEAD, CUP POINT
13	LOWER FLAT ARM ASSEMBLY FOR 4–FACE SIGNAL
14	CENTERING WASHER ASSEMBLY

ISSUED:		STANDARD DETAIL		DETAIL NO.
7/89	CITY OF TUCSON FOUNDED 1775	4-WAY SPAN WIRE MOUNTING ASSEMBLY	THE SEAL of PIMA COUNTY ARIZONA	T 913
REVISED: 10/02				SHEET 1 OF 1

TS9–13.DWG 12/07/00 14:37

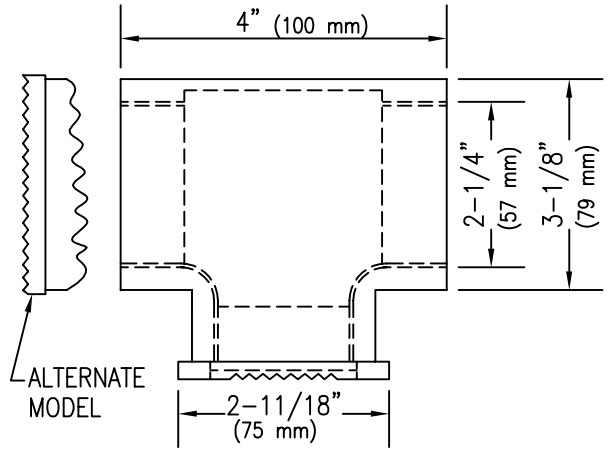

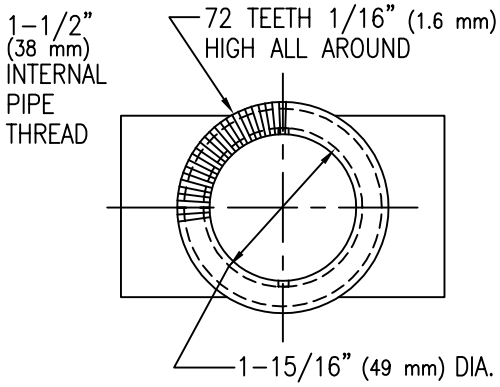

-1 TEE WITH LOCKING DEVICE

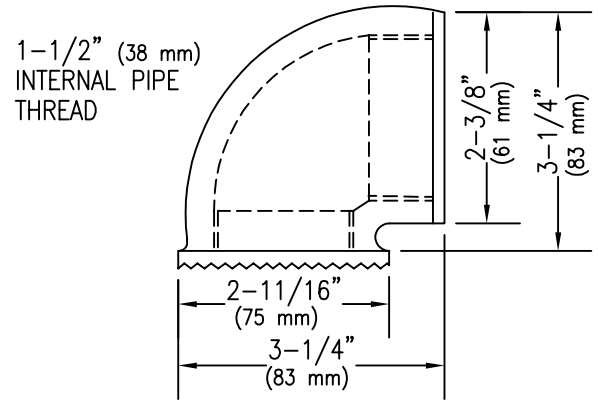

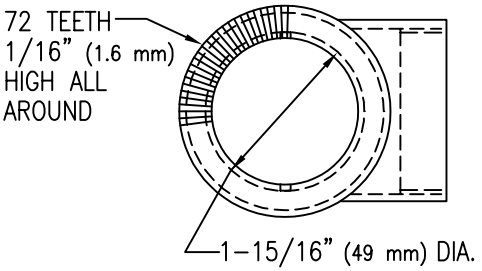

-2 ELBOW WITH LOCKING DEVICE

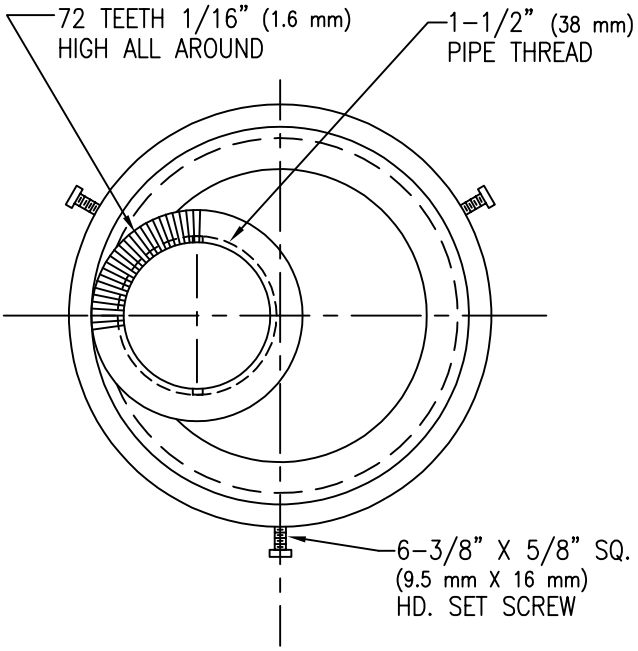

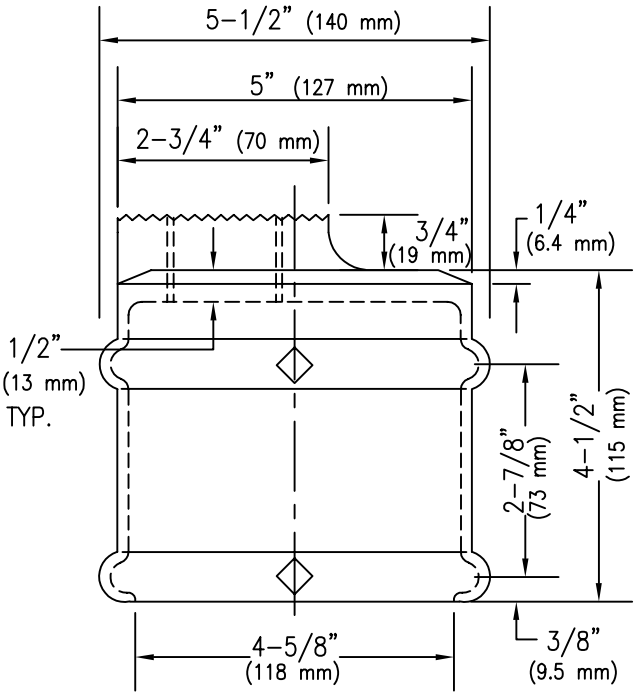

-3 POLE TOP BRACKET

ISSUED:		STANDARD DETAIL		DETAIL NO.
8/92	CITY OF TUCSON FOUNDED 1775	MISCELLANEOUS SIGNAL MOUNTING PARTS	THE SEAL of PIMA COUNTY ARIZONA	T 1001
REVISED: 10/02				SHEET 1 OF 2

TS10-1-1.DWG 12/07/00 14:40

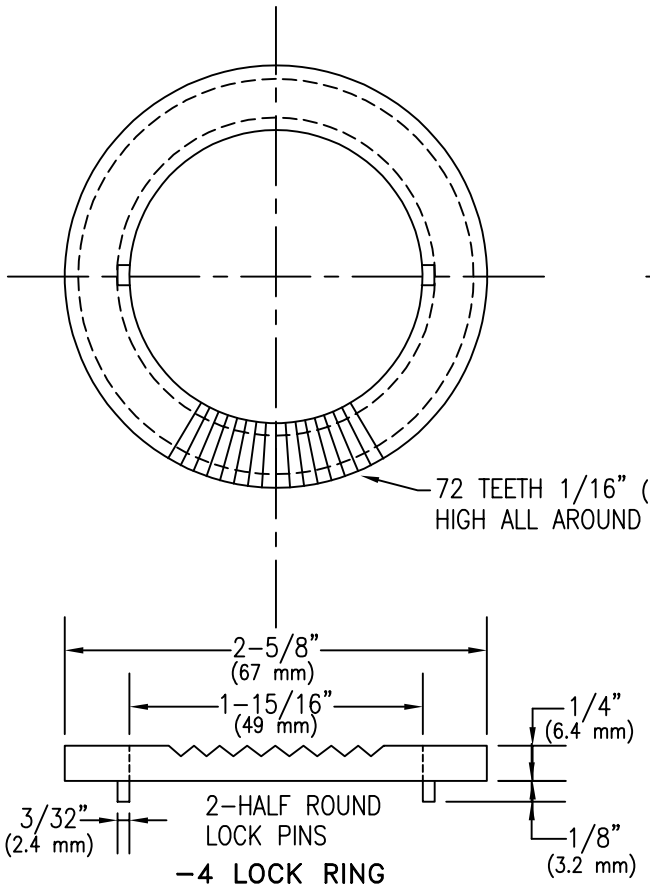

-4 LOCK RING

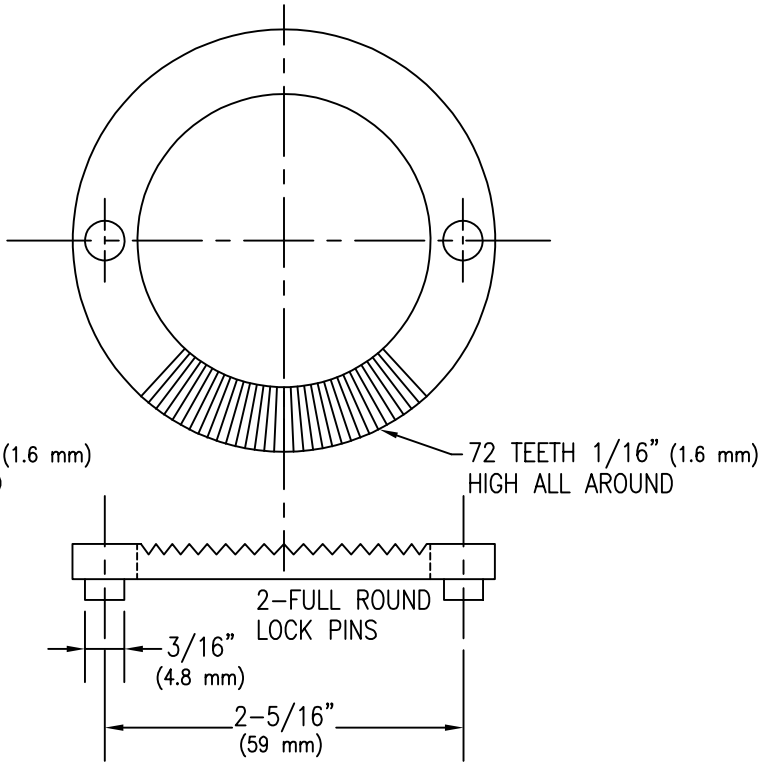

-5 LOCK RING

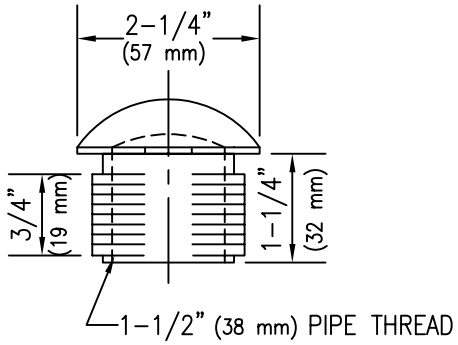

NOTES:

1. MATERIAL
   - -1 TEE, FERROUS
   - -2 ELBOW, FERROUS
   - -3 BRACKET, BRONZE
   - -4 LOCK RING, BRONZE
   - -5 CAP, ALUMINUM
2. PAINT FINISH TO BE FEDERAL YELLOW UNLESS OTHERWISE SPECIFIED

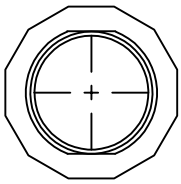

-6 ORNAMENTAL CAP

ISSUED:		STANDARD DETAIL		DETAIL NO.
8/92	CITY OF TUCSON FOUNDED 1775	MISCELLANEOUS SIGNAL MOUNTING PARTS	THE SEAL of PIMA COUNTY ARIZONA	T 1001
REVISED: 10/02				SHEET 2 OF 2

TS10-1-2.DWG 12/07/00 14:41

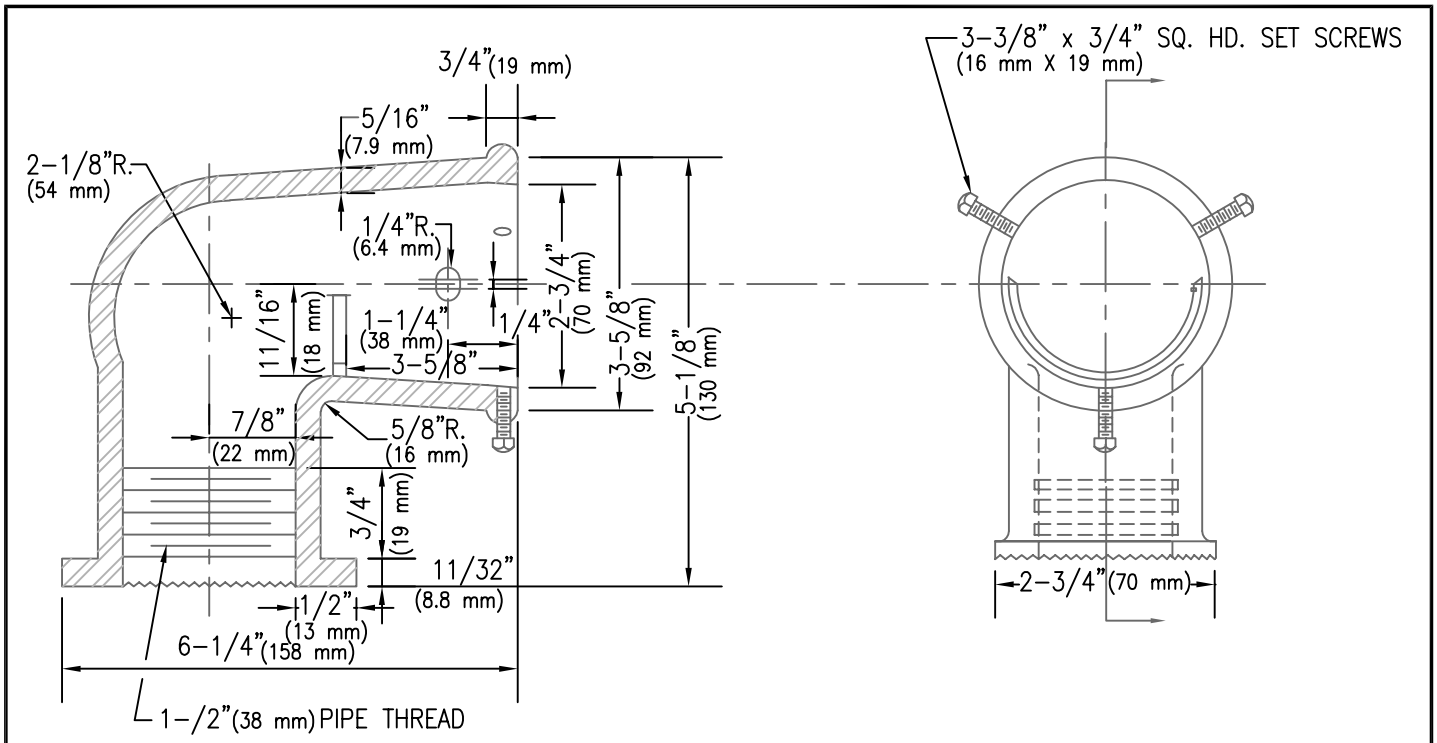

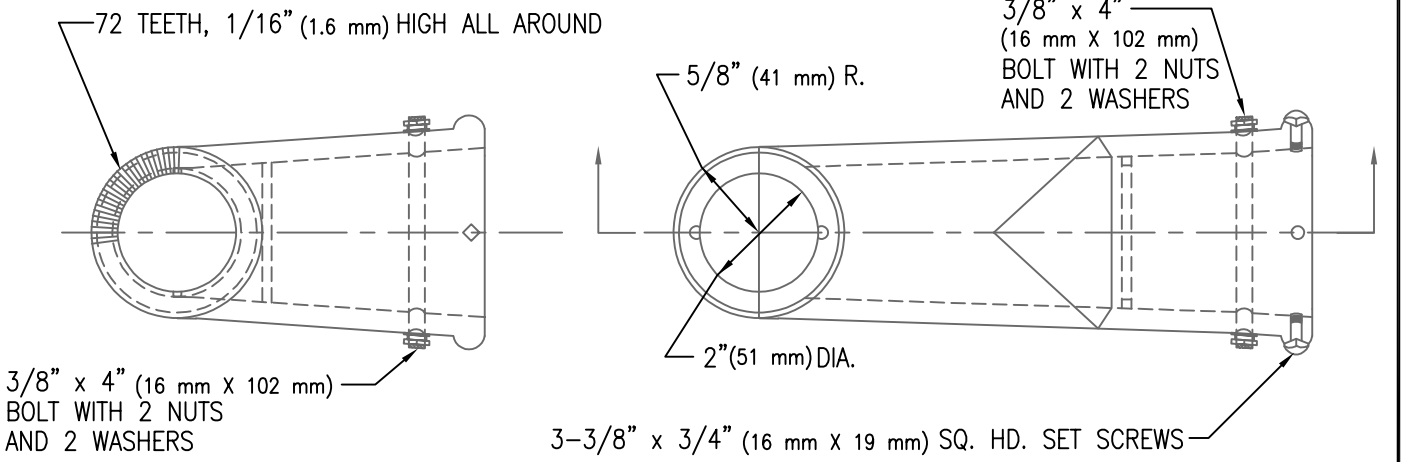

PLUMBIZER

NOTES:

1. MATERIAL – BRONZE
2. PAINT FINISH TO BE FEDERAL YELLOW UNLESS OTHERWISE SPECIFIED.

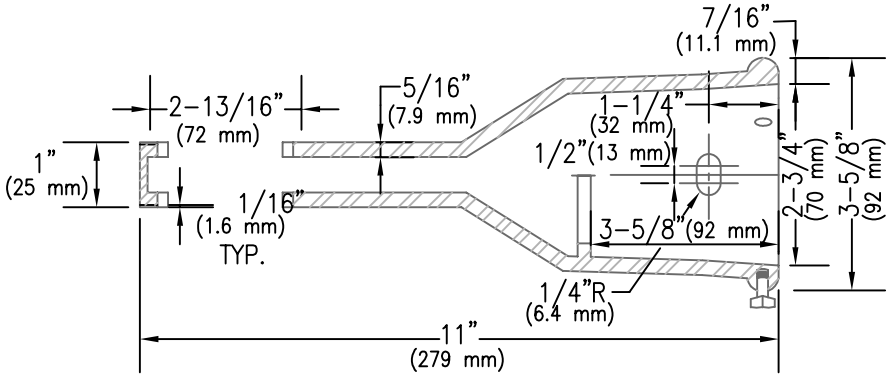

ELEVATOR PLUMBIZER

ISSUED:		STANDARD DETAIL		DETAIL NO.
8/92		MAST ARM PLUMBIZER		T 1002
REVISED:				
10/02				SHEET 1 OF 1

TS10-2.DWG 12/07/00 14:41

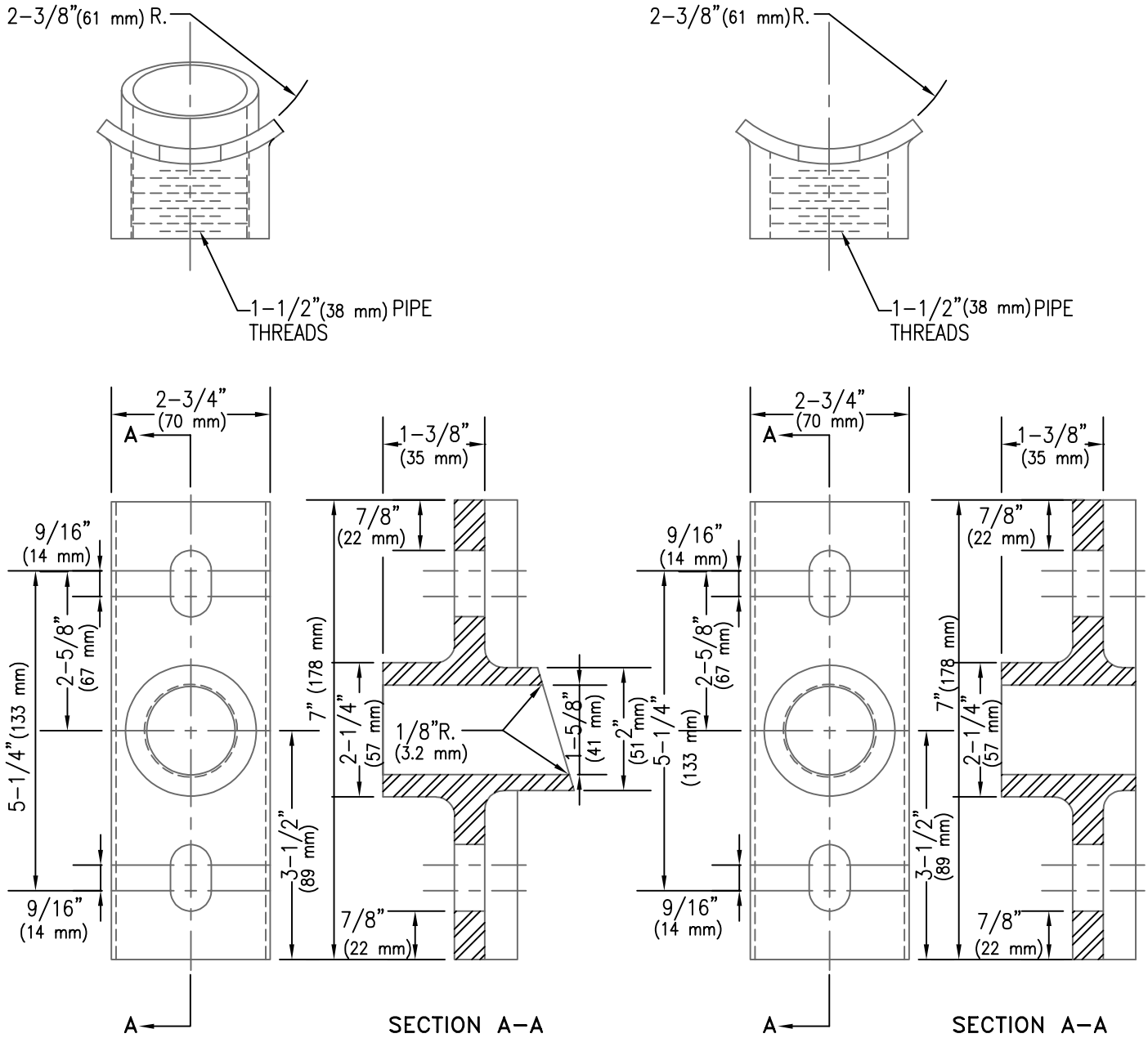

POLE PLATE WITH WIRE GUIDE
(-1)

POLE PLATE
(-2)

NOTES:

1. MATERIAL - HIGH STRENGTH BRONZE.
2. PAINT FINISH TO BE FEDERAL YELLOW UNLESS OTHERWISE SPECIFIED.

ISSUED:		STANDARD DETAIL		DETAIL NO.
8/92		POLE PLATE DETAIL		T 1003
REVISED:				
10/02				SHEET 1 OF 1

TS10-3.DWG 12/07/00 14:42

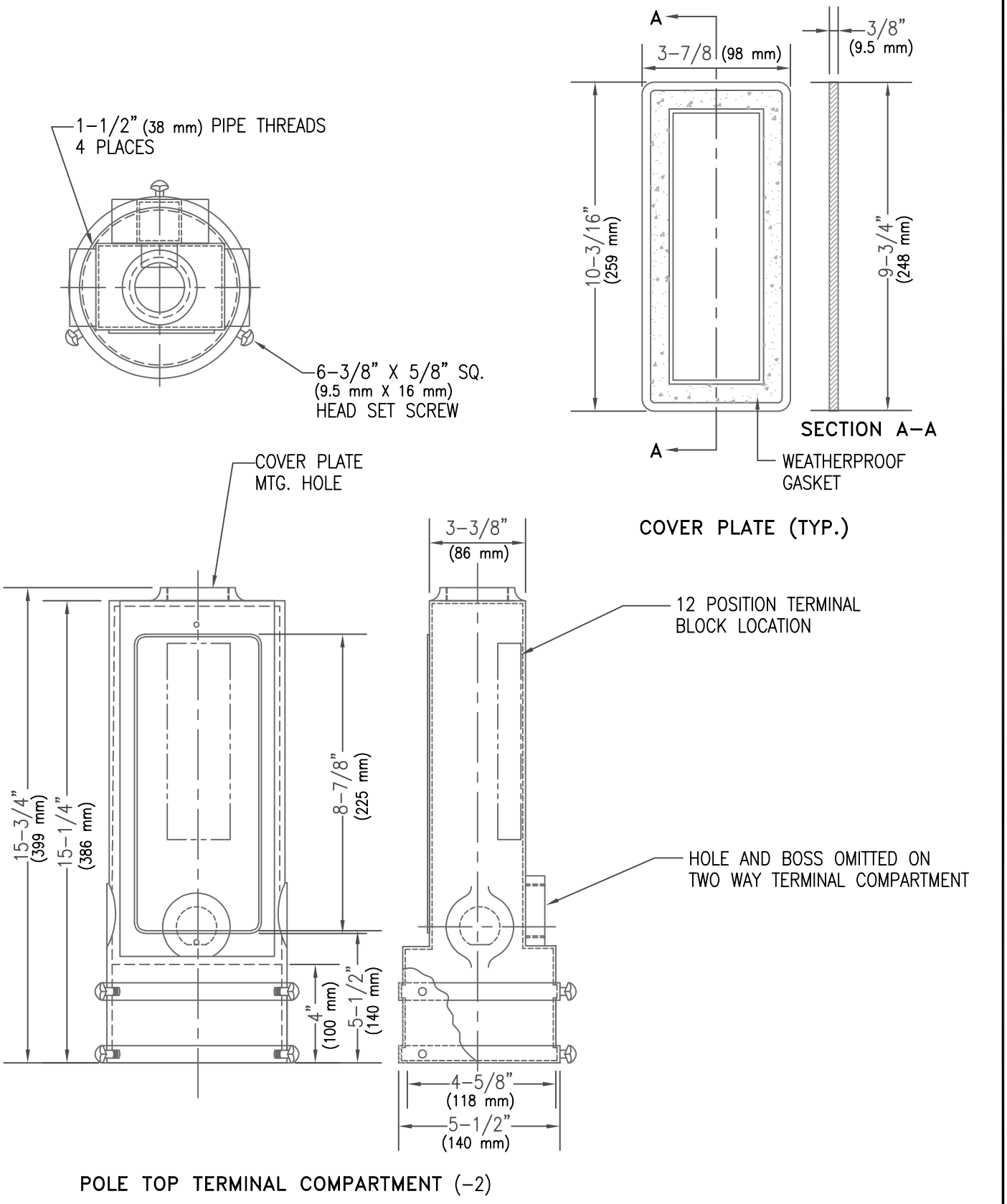

POLE TOP TERMINAL COMPARTMENT (-2)

ISSUED:		STANDARD DETAIL		DETAIL NO.
8/92	CITY OF TUCSON FOUNDED 1775	TERMINAL COMPARTMENT SIDE MOUNT AND POLE TOP MOUNT	THE SEAL of PIMA COUNTY ARIZONA	T 1004
REVISED: 11/04				SHEET 1 OF 2

TS10-4-1.DWG 12/07/00 14:43

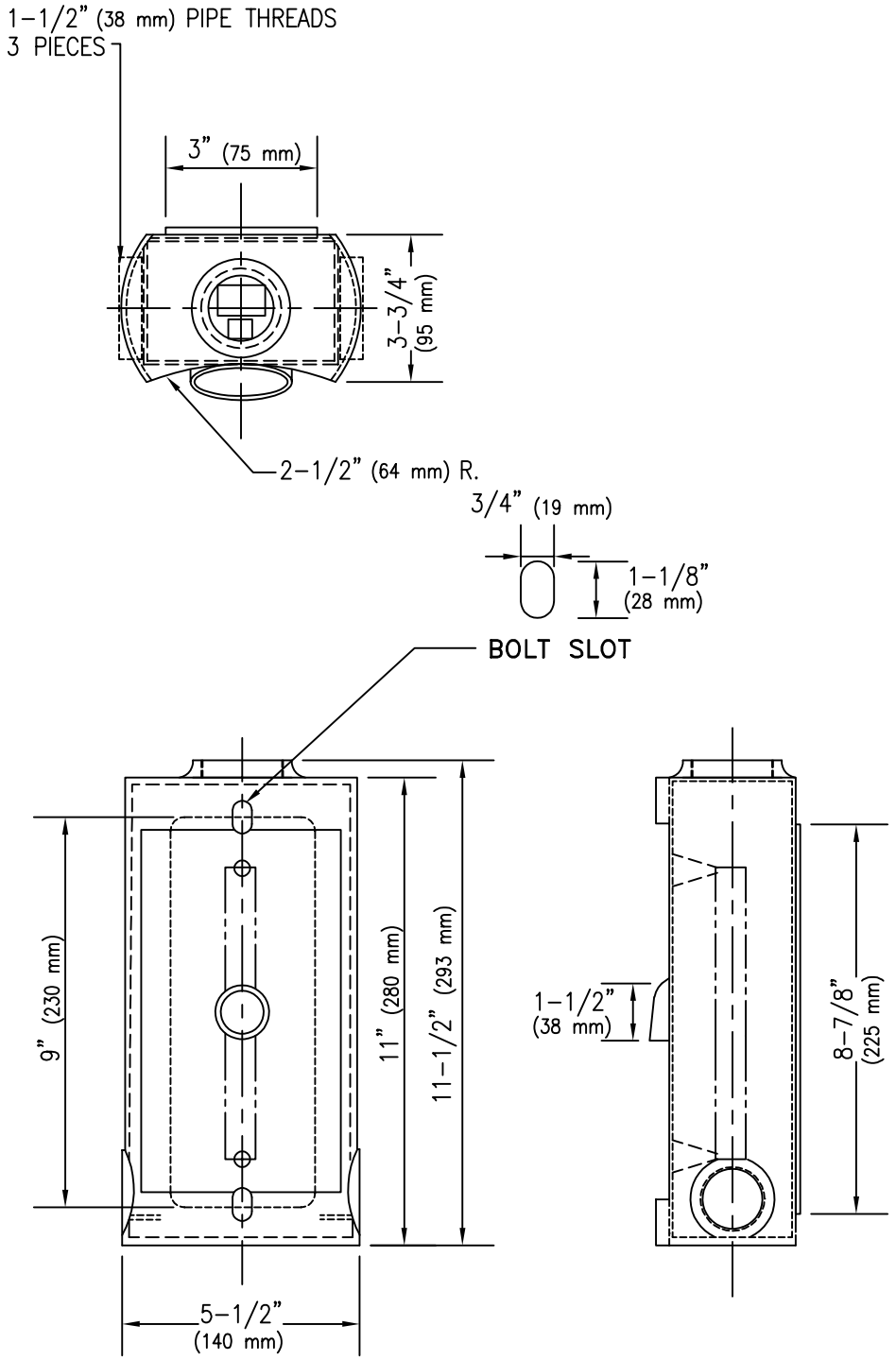

SIDE MOUNTED TERMINAL COMPARTMENT
(-1)

NOTES:

1. COVER PLATE SHALL BE ATTACHED WITH 2 MACHINE SCREWS, 10-32 X 3/4" (19 mm)
2. MATERIAL - SEE GENERAL SPECIFICATIONS AND/OR SPECIAL PROVISIONS.
3. PAIN FINISH TO BE FEDERAL YELLOW UNLESS OTHERWISE SPECIFIED.

ISSUED:		STANDARD DETAIL		DETAIL NO.
8/92	CITY OF TUCSON FOUNDED 1775	TERMINAL COMPARTMENT SIDE MOUNT AND POLE TOP MOUNT	THE SEAL of PIMA COUNTY ARIZONA	T 1004
REVISED:				
10/02				SHEET 2 OF 2

TS10-4-2.DWG 12/07/00 14:43

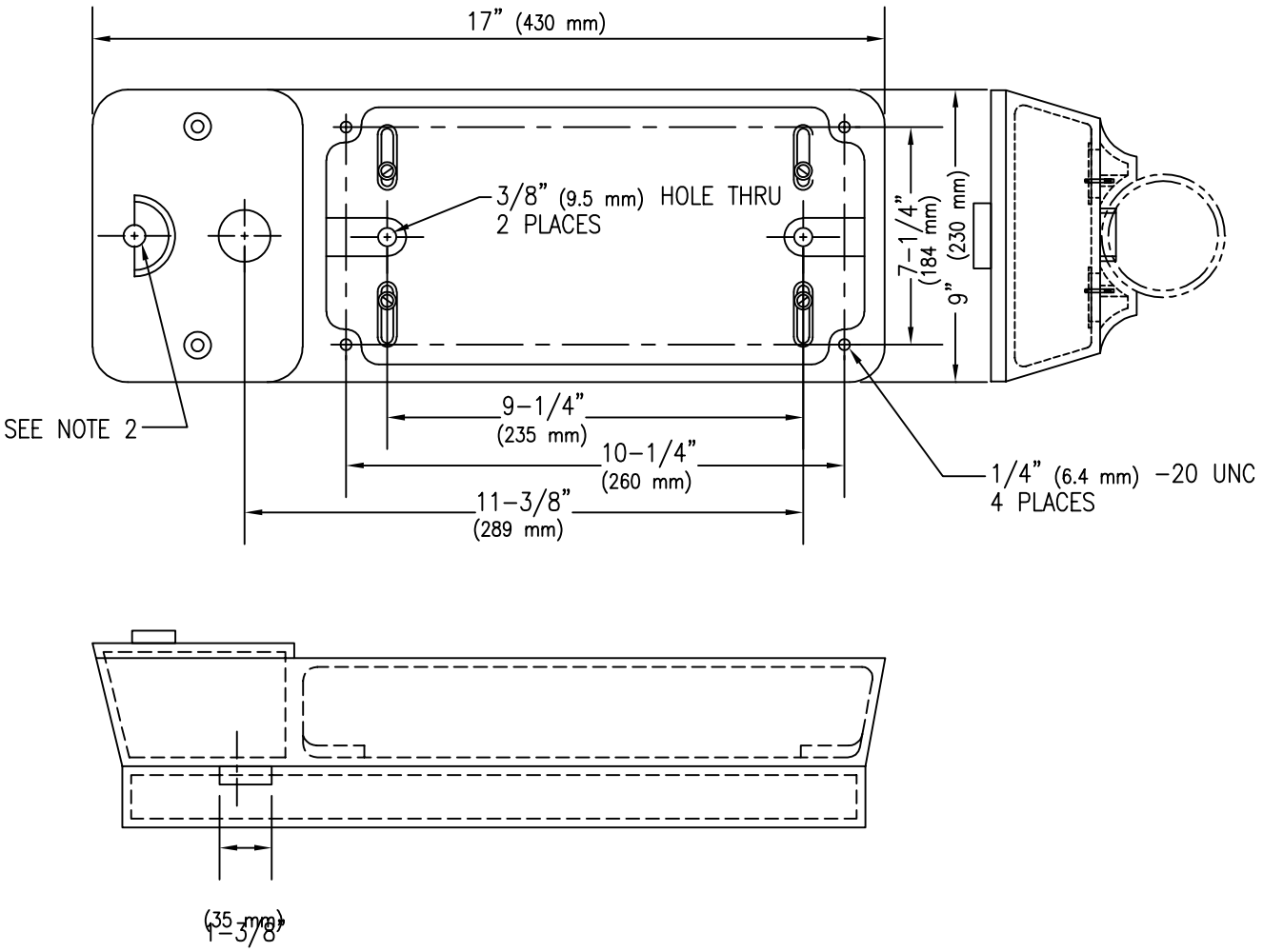

NOTES:

1. MATERIAL SHALL BE ALUMINUM ALLOY.
2. DIAMETER OF CASTING BACK TO ADJUST TO POLE DIAMETER.
3. PUSH BUTTON SHALL CONTAIN A MOMENTARY CONTACT SWITCH WITH NORMAL OPEN CONTACT.
4. POLE INSTALLATION BOLTS, SIGN SCREWS AND WASHERS SHALL BE FURNISHED WITH UNIT.
5. PUSH BUTTON COVER SHALL BE RAIN AND DUST PROOF.
6. PAINT FEDERAL YELLOW UNLESS OTHERWISE SPECIFIED.
7. FOR PEDESTRIAN PLACARD DETAIL, SEE T 1103 OR 1104.

ISSUED:		STANDARD DETAIL		DETAIL NO.
8/92		TYPE I PEDESTRIAN PUSH BUTTON		T 1101
REVISED:				
10/02				SHEET 1 OF 1

TS11-1.DWG 12/07/00 14:45

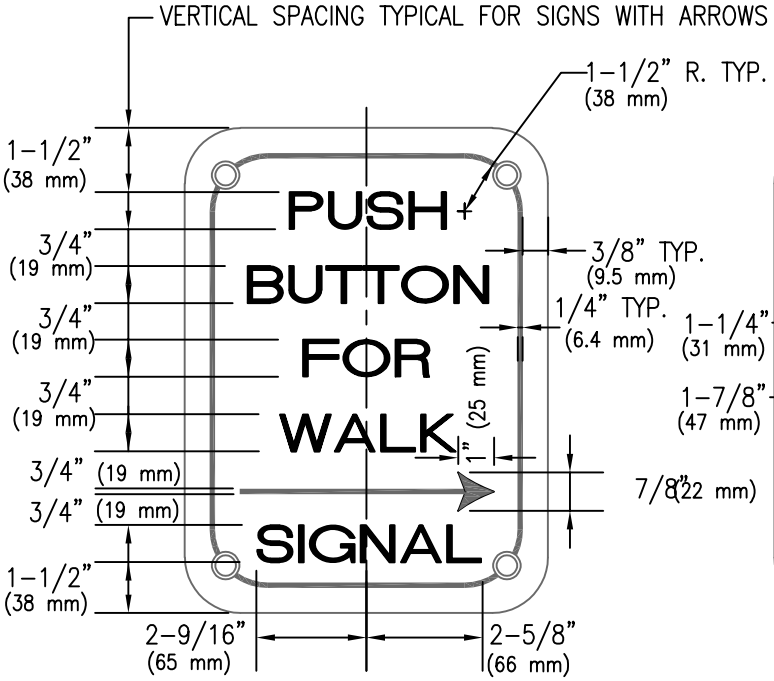

R10-4(R)

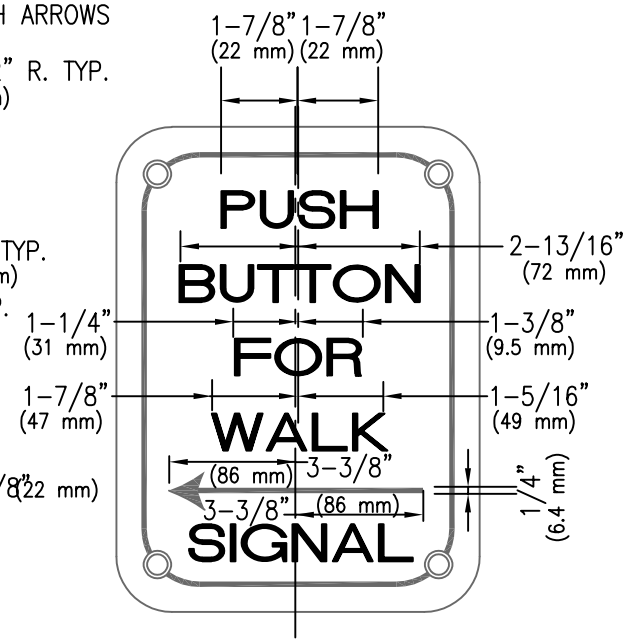

R10-4(L)

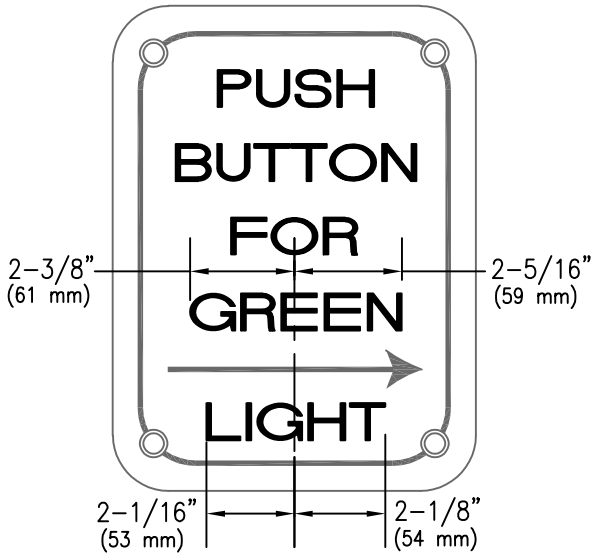

R10-3(R)

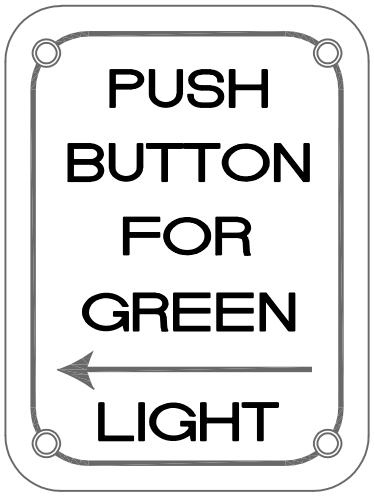

R10-3(L)

NOTES:

1. FOR TYPICAL HORIZONTAL SPACING OF WORDS, SEE SIGN NUMBERS R10-4(R), R10-4(L) AND R10-3(R).
2. FOR TYPICAL ARROW DIMENSIONS, SEE SIGN NUMBER R10-4(L).
3. MATERIAL TO BE 20 GAUGE STEEL WITH PORCELAIN ENAMEL.
4. ALL LETTERS SHALL BE 1" (25 mm) SERIES "D".

ISSUED:		STANDARD DETAIL		DETAIL NO.
8/92	CITY OF TUCSON FOUNDED 1775	PLACARDS FOR PEDESTRIAN PUSH BUTTONS	THE SEAL of PIMA COUNTY ARIZONA	T 1103
REVISED: 10/02				SHEET 1 OF 2

TS11-3-1.DWG 12/07/00 14:46

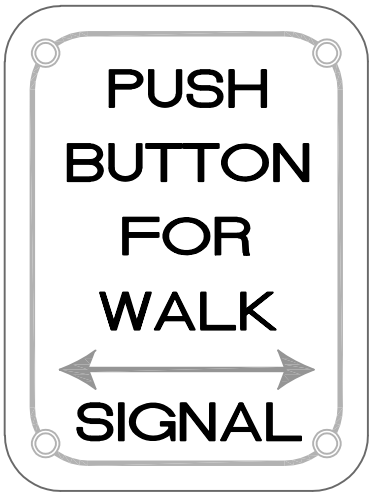

R10–4(B)

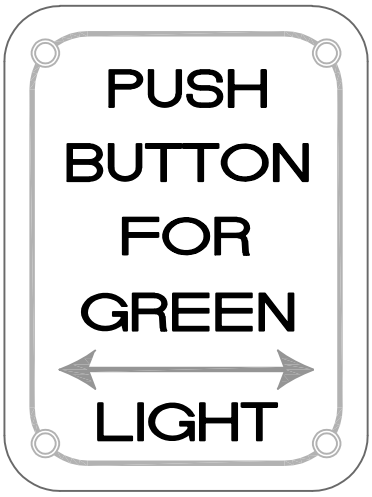

R10–3(B)

BIKE

YIELD

ISSUED:		STANDARD DETAIL		DETAIL NO.
8/92		PLACARDS FOR PEDESTRIAN PUSH BUTTONS		T 1103
REVISED:				
10/02				SHEET 2 OF 2

TS11–3–2.DWG 12/07/00 14:47

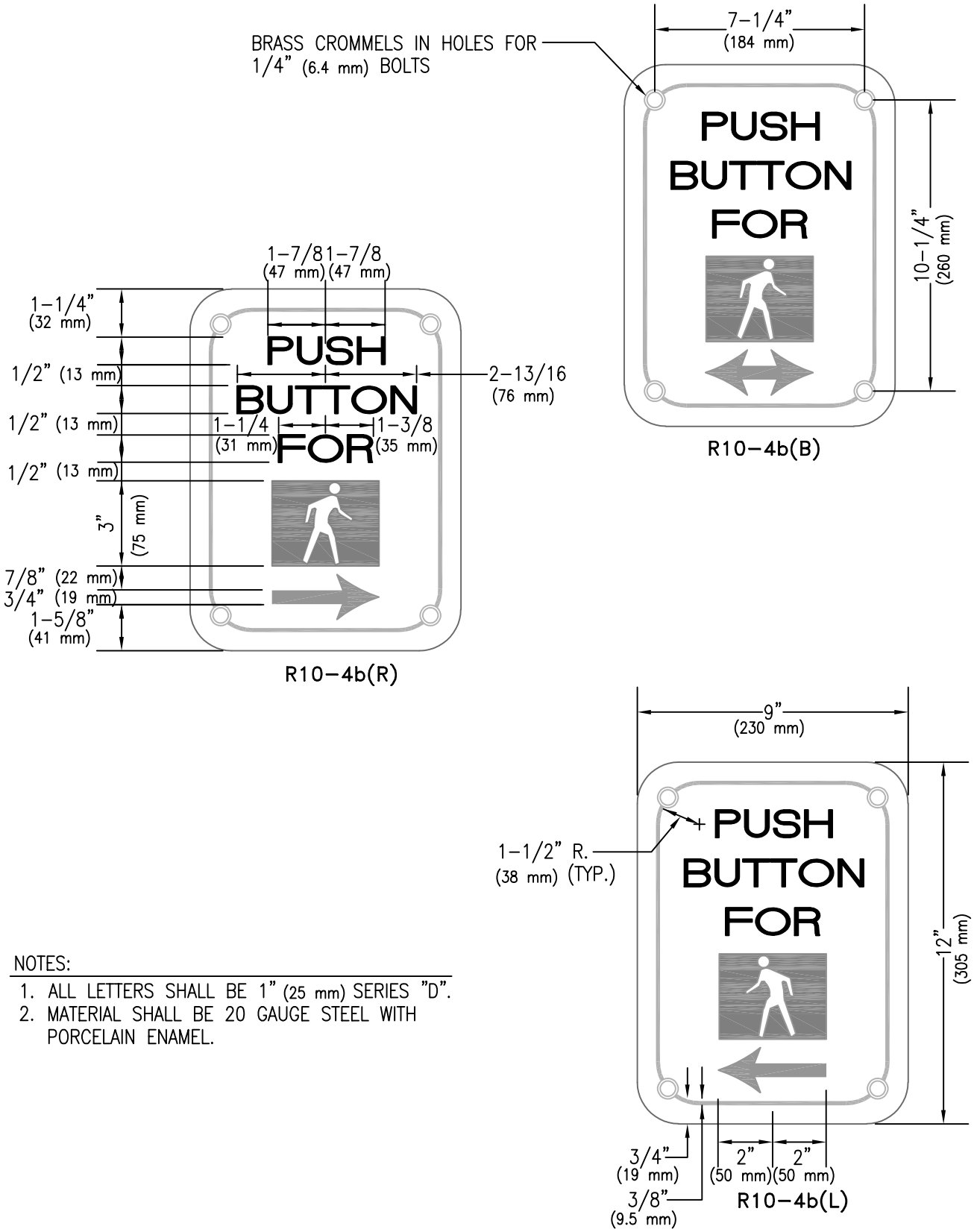

NOTES:

1. ALL LETTERS SHALL BE 1" (25 mm) SERIES "D".
2. MATERIAL SHALL BE 20 GAUGE STEEL WITH PORCELAIN ENAMEL.

ISSUED:		STANDARD DETAIL		DETAIL NO.
8/92	CITY OF TUCSON FOUNDED 1775	PLACARDS FOR PEDESTRIAN PUSH BUTTONS (INTERNATIONAL)	THE SEAL of PIMA COUNTY ARIZONA	T 1104
REVISED: 10/02				SHEET 1 OF 2

TS11-4.DWG 12/07/00 14:58

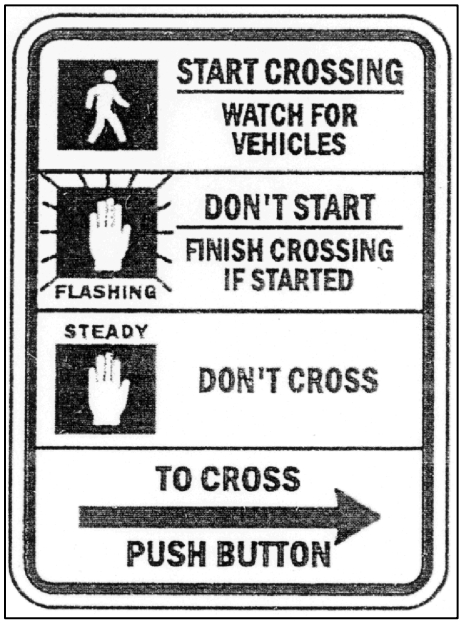

R10–6(R) (SHOWN)
R10–6(L): ARROW HEAD TO LEFT
R10–6(B): ARROW HEAD IN BOTH DIRECTIONS

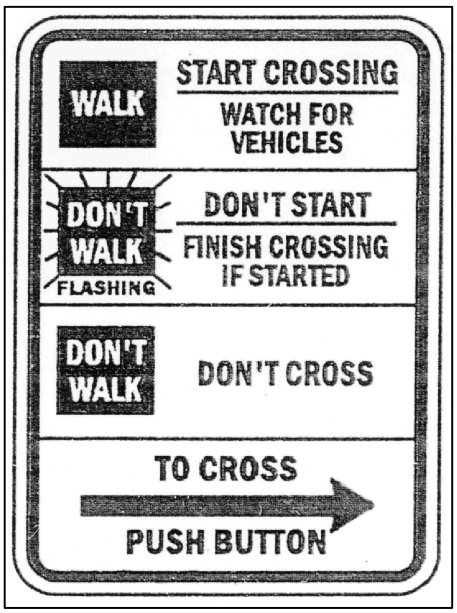

R10–7(R) (SHOWN)
R10–7(L): ARROW HEAD TO LEFT
R10–7(B): ARROW HEAD IN BOTH DIRECTIONS

ISSUED:		STANDARD DETAIL		DETAIL NO.
8/92	CITY OF TUCSON	PLACARDS FOR PEDESTRIAN PUSH BUTTONS (INTERNATIONAL)	THE SEAL of PIMA COUNTY ARIZONA	T 1104
REVISED: 10/02				SHEET 2 OF 2

TS11-4.DWG 12/07/00 14:58

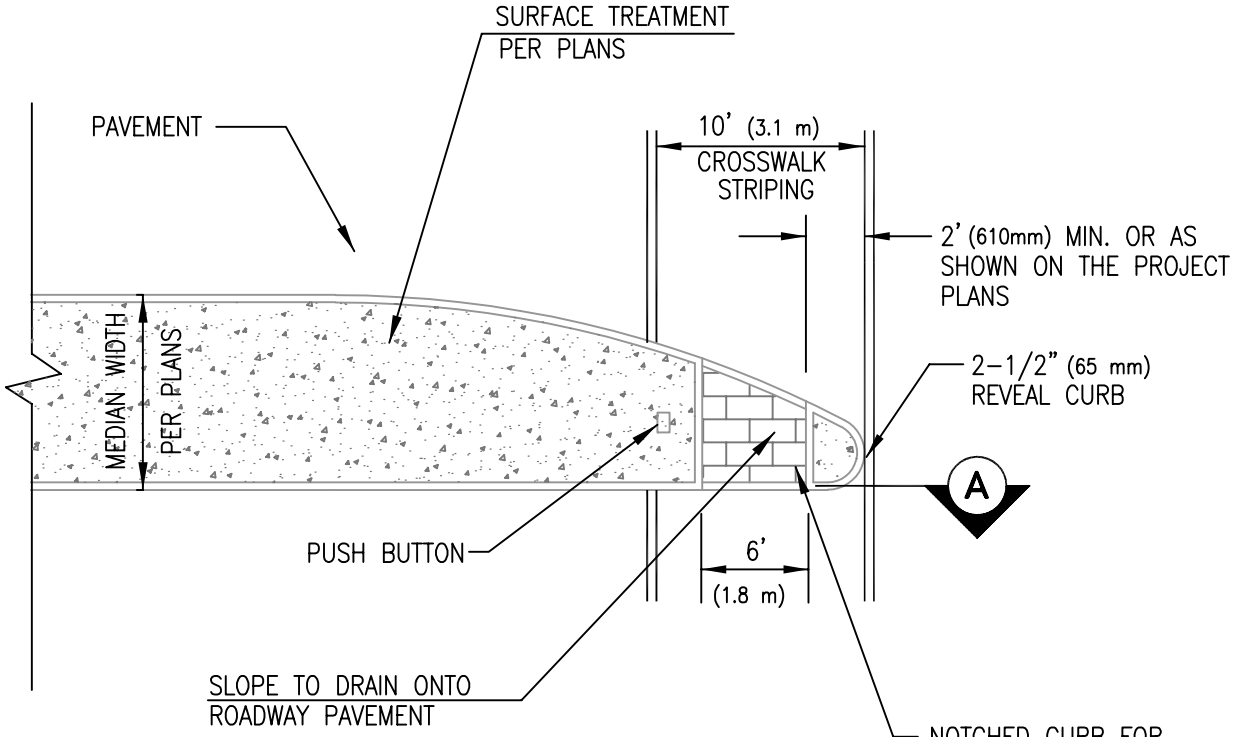

PLAN

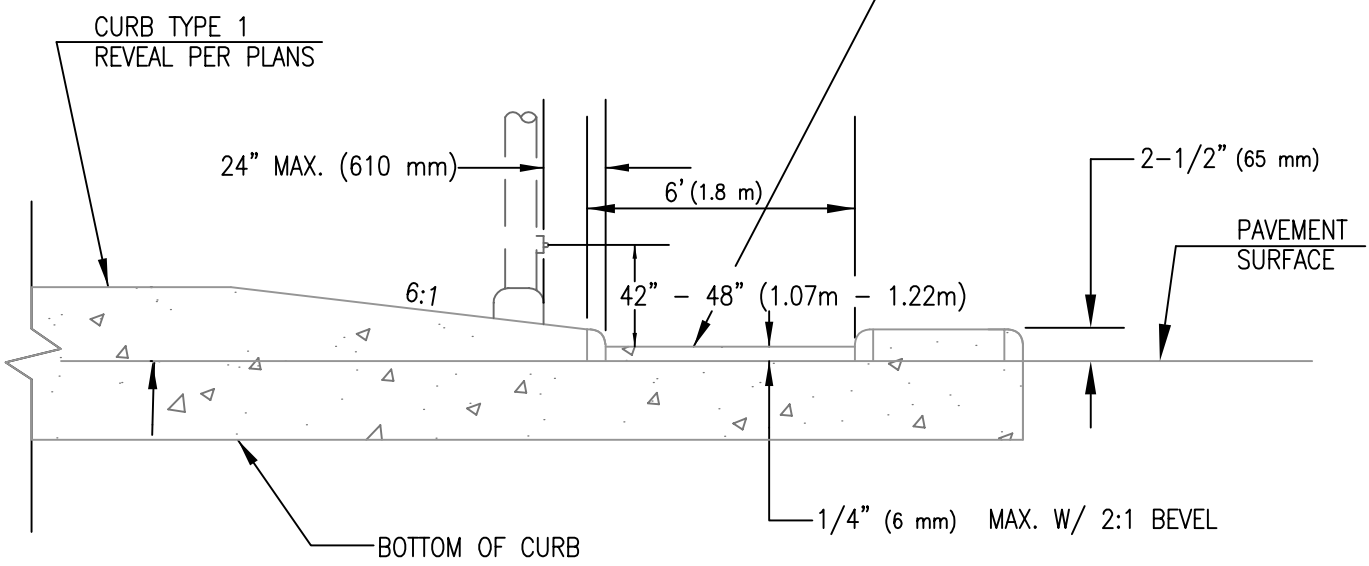

A SECTION

CROSSWALK THROUGH MEDIAN

ISSUED:		STANDARD DETAIL		DETAIL NO.
10/88	CITY OF TUCSON FOUNDED 1776	PEDESTRIAN PUSH BUTTON MEDIAN CROSSWALK LOCATION	THE SEAL of PIMA COUNTY ARIZONA	T1105
REVISED: 11/04				SHEET 1 OF 1

21404B.DWG 08/03/00 09:10

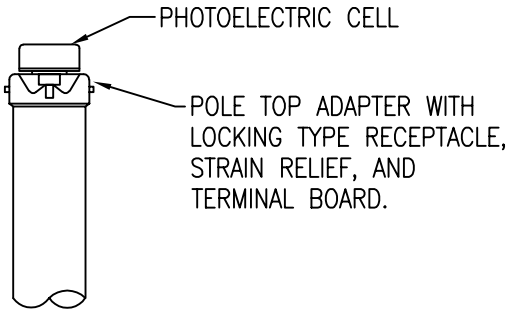

STEEL POLE–TOP

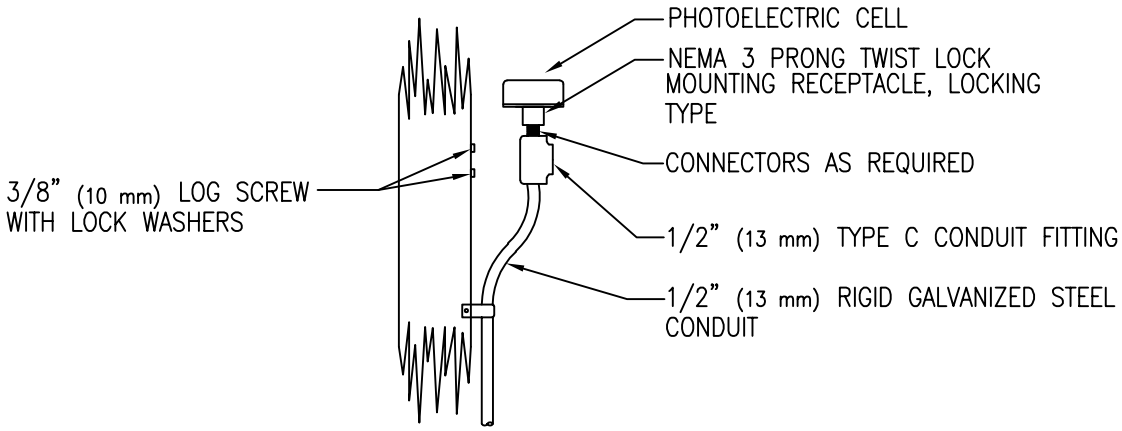

WOOD POLE MOUNT

NOTES:

1. ORIENTATE PHOTO ELECTRIC CELL TO FACE NORTH.
2. ALL CONDUIT CONNECTIONS SHALL BE WATER TIGHT.
3. THE PHOTELECTRIC CELL MAY ALSO BE INSTALLED IN THE LUMINAIRE CLOSEST TO THE CONTROL CABINET. IT IS PREFERABLE THAT THE LUMINAIRE BE POSITIONED OVER A MULTI–USE LANE OR A RIGHT TURN LANE.

ISSUED:		STANDARD DETAIL		DETAIL NO.
8/92		PHOTOELECTRIC CELL MOUNTING		T 1505
REVISED:				
10/02				SHEET 1 OF 1

TS15–5.DWG 12/07/00 15:05

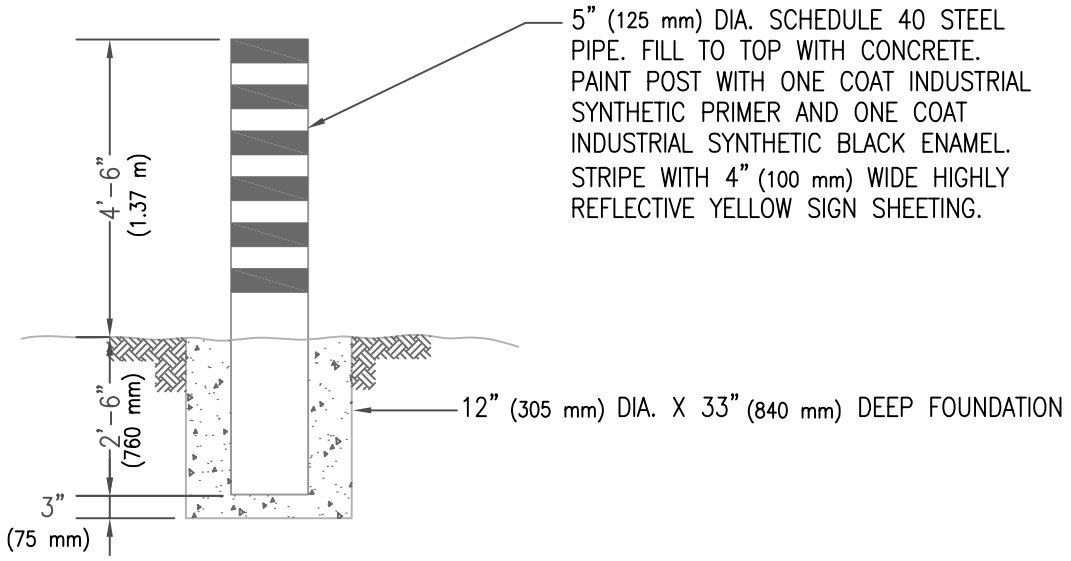

NOTE:

1. LOCATE PER INSPECTOR'S DIRECTION.

ISSUED:		STANDARD DETAIL		DETAIL NO.
8/92		GUARD POST		T 1603
REVISED:				
10/02				SHEET 1 OF 1

TS16-3.DWG 08/03/00 15:22

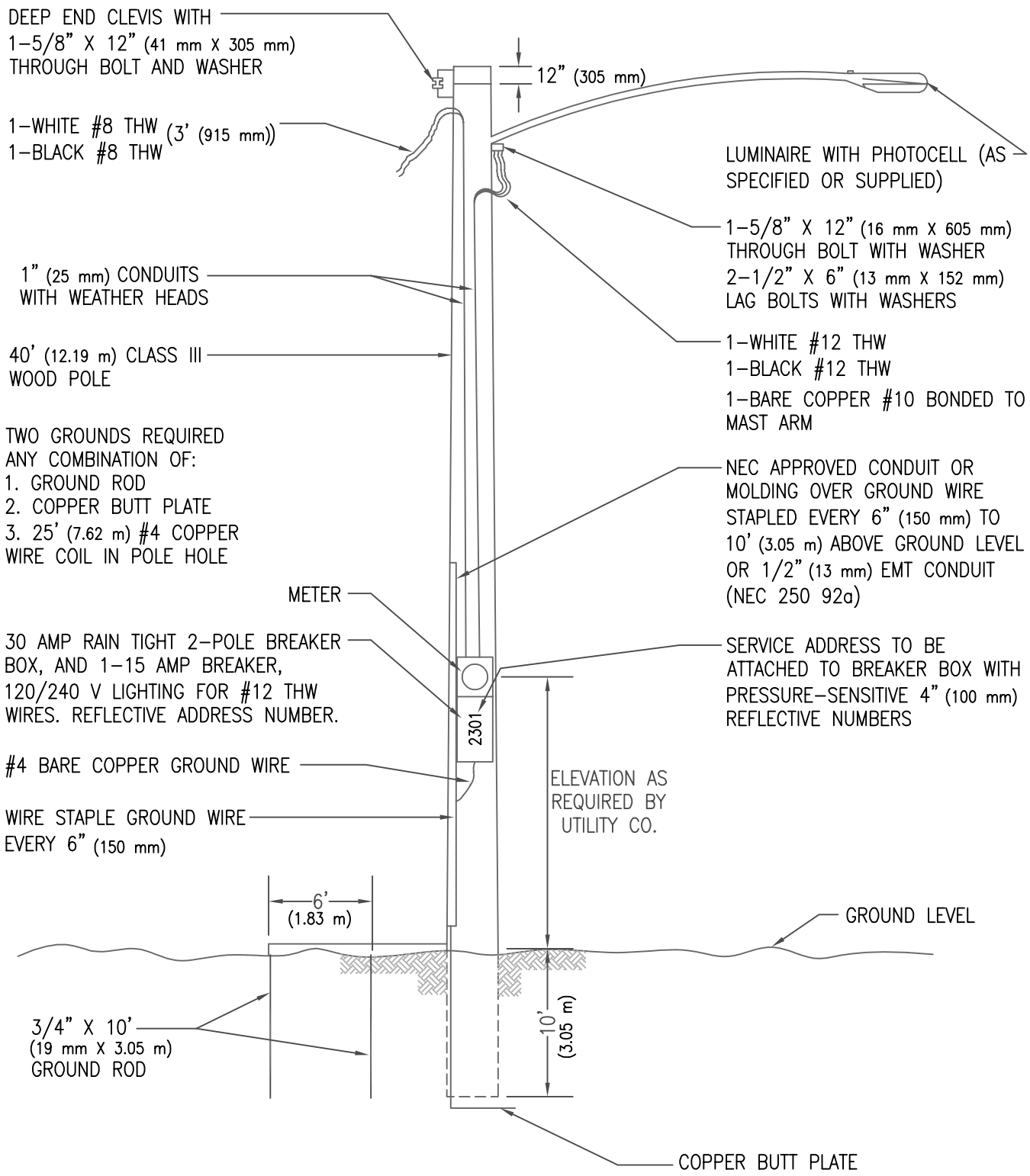

ISSUED:		STANDARD DETAIL		DETAIL NO.
8/92		SERVICE STREET LIGHT ASSEMBLY (METERED)		T 1701
REVISED:				
10/02				SHEET 1 OF 1

TS17–1.DWG 12/07/00 15:05

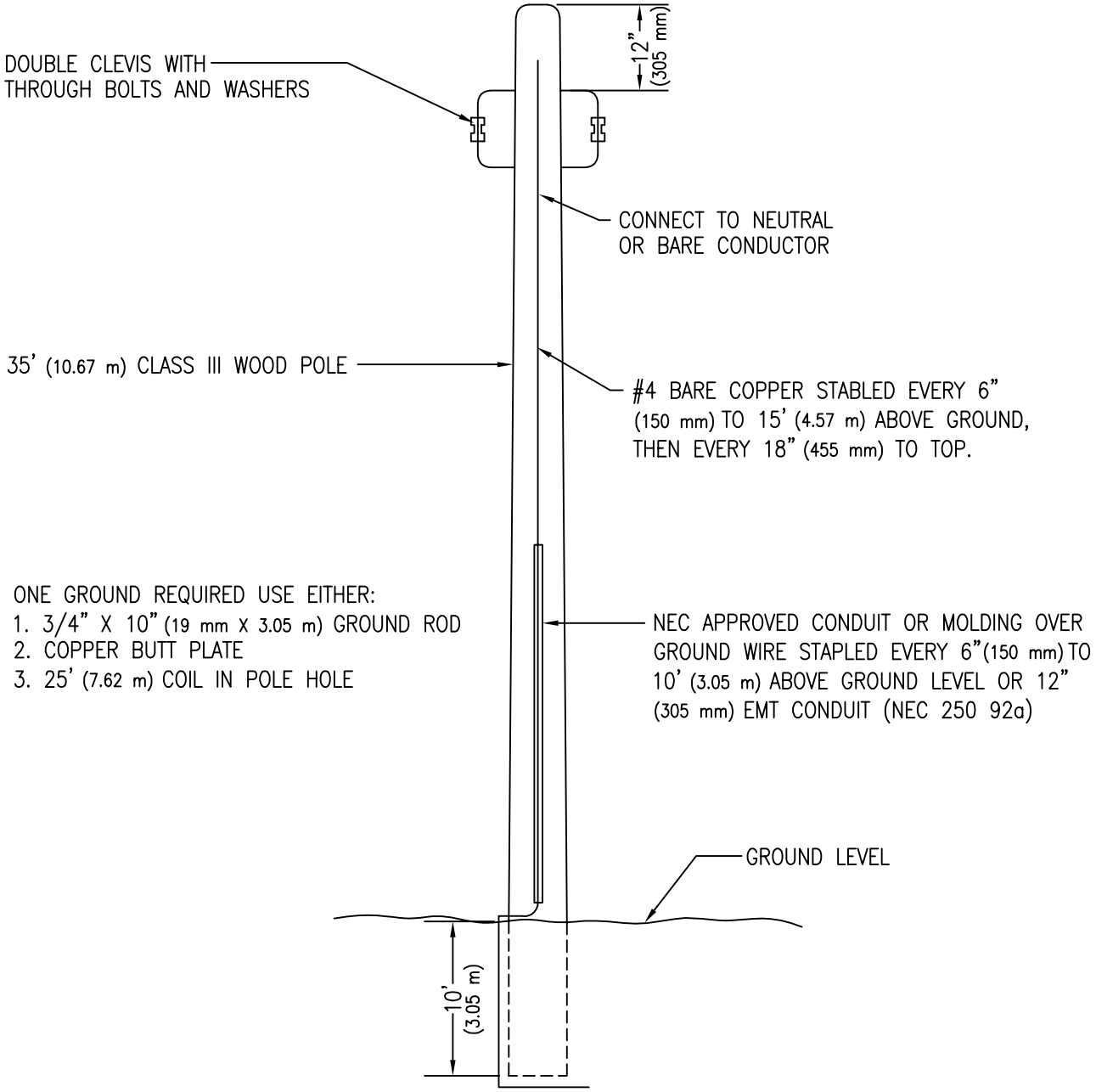

ISSUED:		STANDARD DETAIL		DETAIL NO.
8/92		MID-SPAN JUMPER POLE		T 1702
REVISED:				SHEET 1 OF 1
10/02				

TS17-2.DWG 12/07/00 15:06

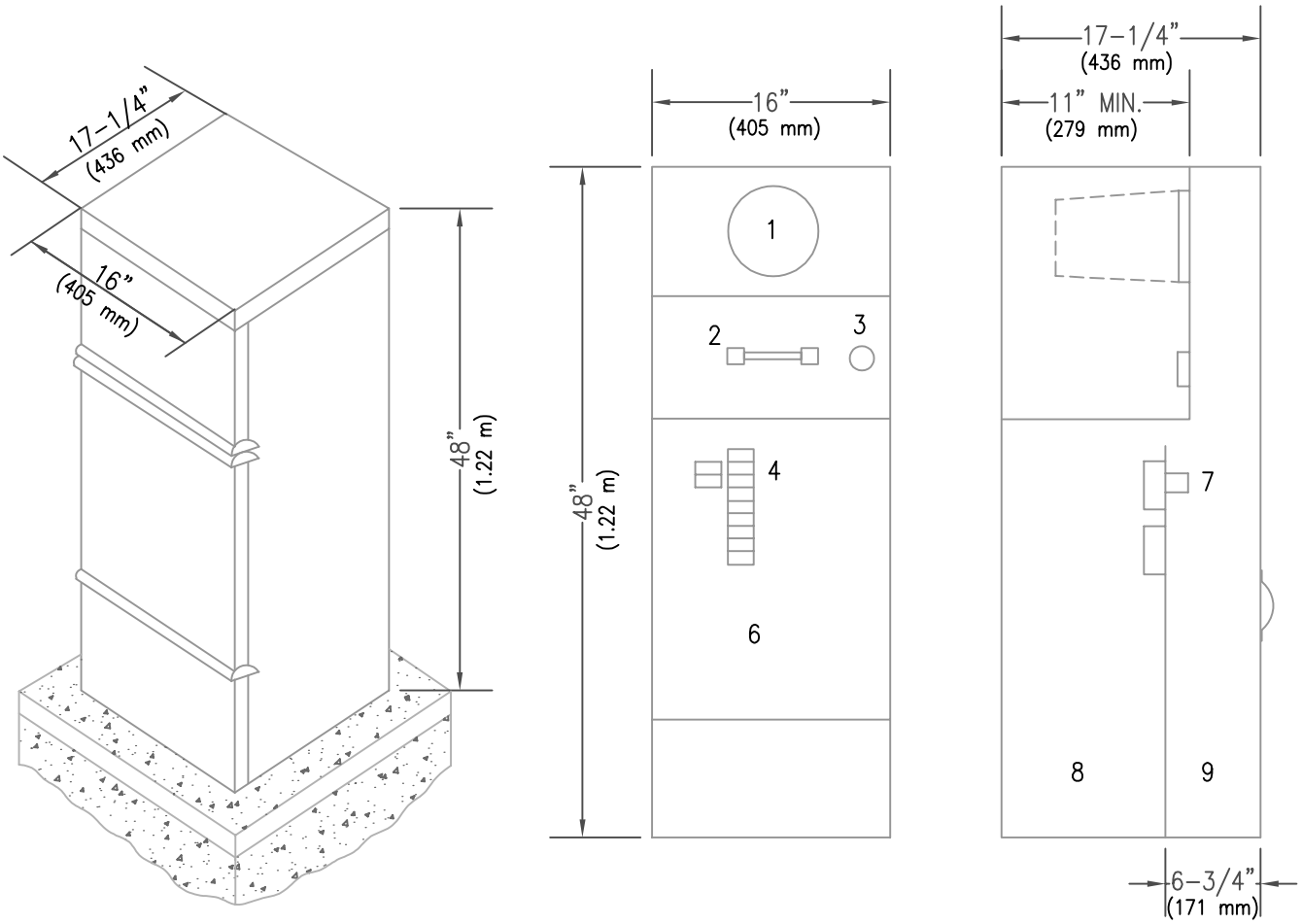

STANDARD FEATURES

1. METER SOCKET 125 AMP RATED
2. UTILITY TEST SECTION
3. PHOTOCELL SOCKET
4. 12 CIRCUIT INTERIOR (METERED)
5. HINGED DEADFRONT
6. UTILITY LANDING LUGS
7. LOAD CONDUIT AREA
8. LINE CONDUIT AREA
9. LINE ACCESS COVER

STANDARD VOLTAGE 120/240 V 10 3W

NOTE: SERVICE PEDESTAL SHALL BE SUPPLIED WITH: 125 AMP DP MAIN BREAKER; ONE 60 AMP, 2 POLE BREAKER (TRAFFIC SIGNAL); TWO 30 AMP, 1 POLE BREAKERS (STREET LIGHTING). PEDESTAL TO BE 14 GA. STEEL PAINTED WHITE OR AS SPECIFIED.

ISSUED:		STANDARD DETAIL		DETAIL NO.
8/92	CITY OF TUCSON FOUNDED 1775	SERVICE PEDESTAL (METERED)	THE SEAL of PIMA COUNTY ARIZONA	T 1801
REVISED: 10/02				SHEET 1 OF 2

TS18-1-1.DWG 12/07/00 15:06

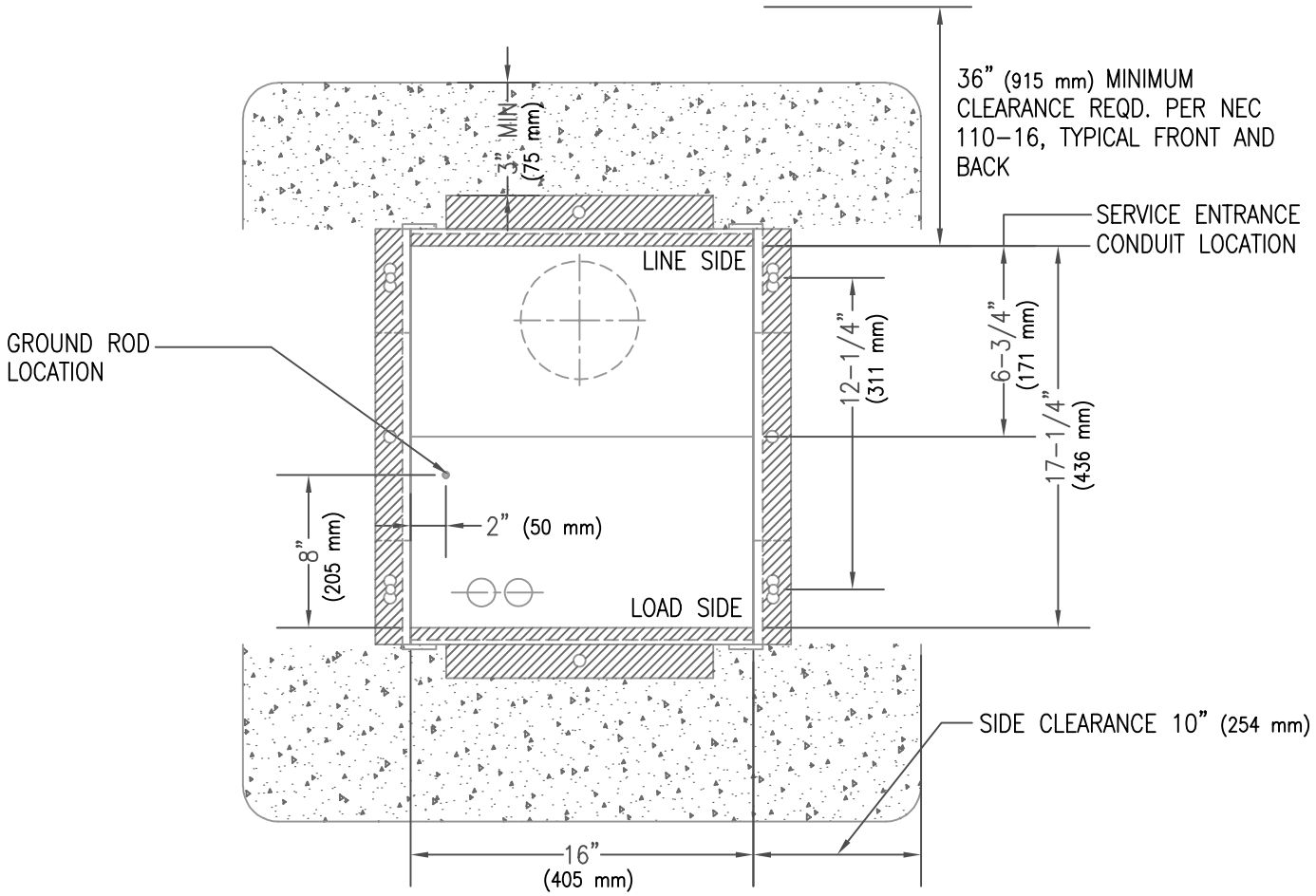

TOP VIEW

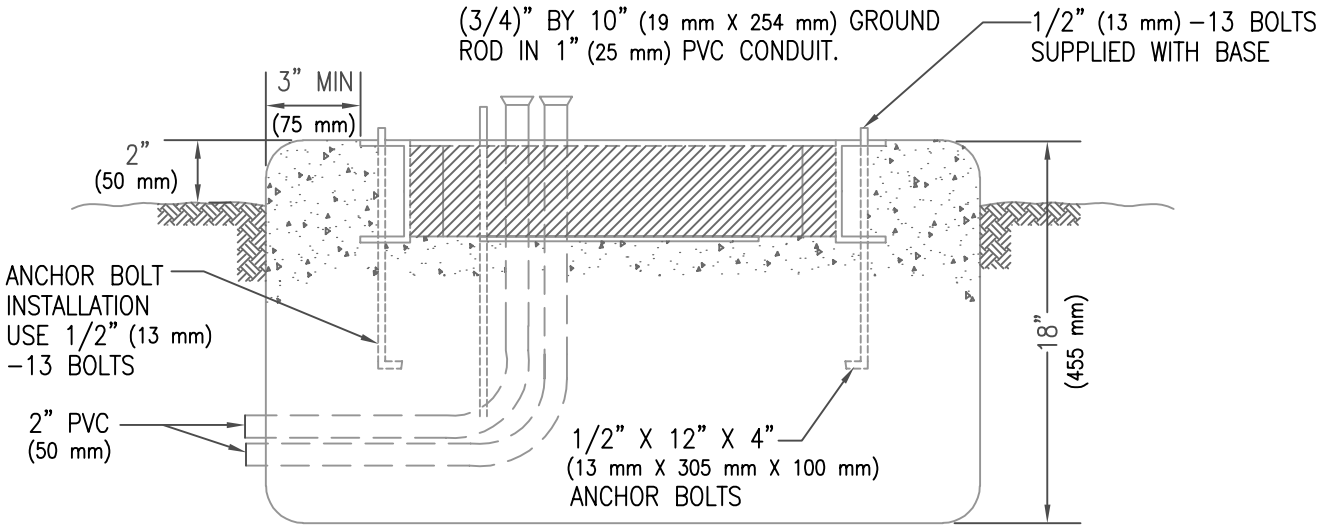

SIDE VIEW

ISSUED:		STANDARD DETAIL		DETAIL NO.
8/92	CITY OF TUCSON FOUNDED 1775	SERVICE PEDESTAL (METERED)	THE SEAL of PIMA COUNTY ARIZONA	T 1801
REVISED: 10/02				SHEET 2 OF 2

TS18-1-2.DWG 12/07/00 15:07

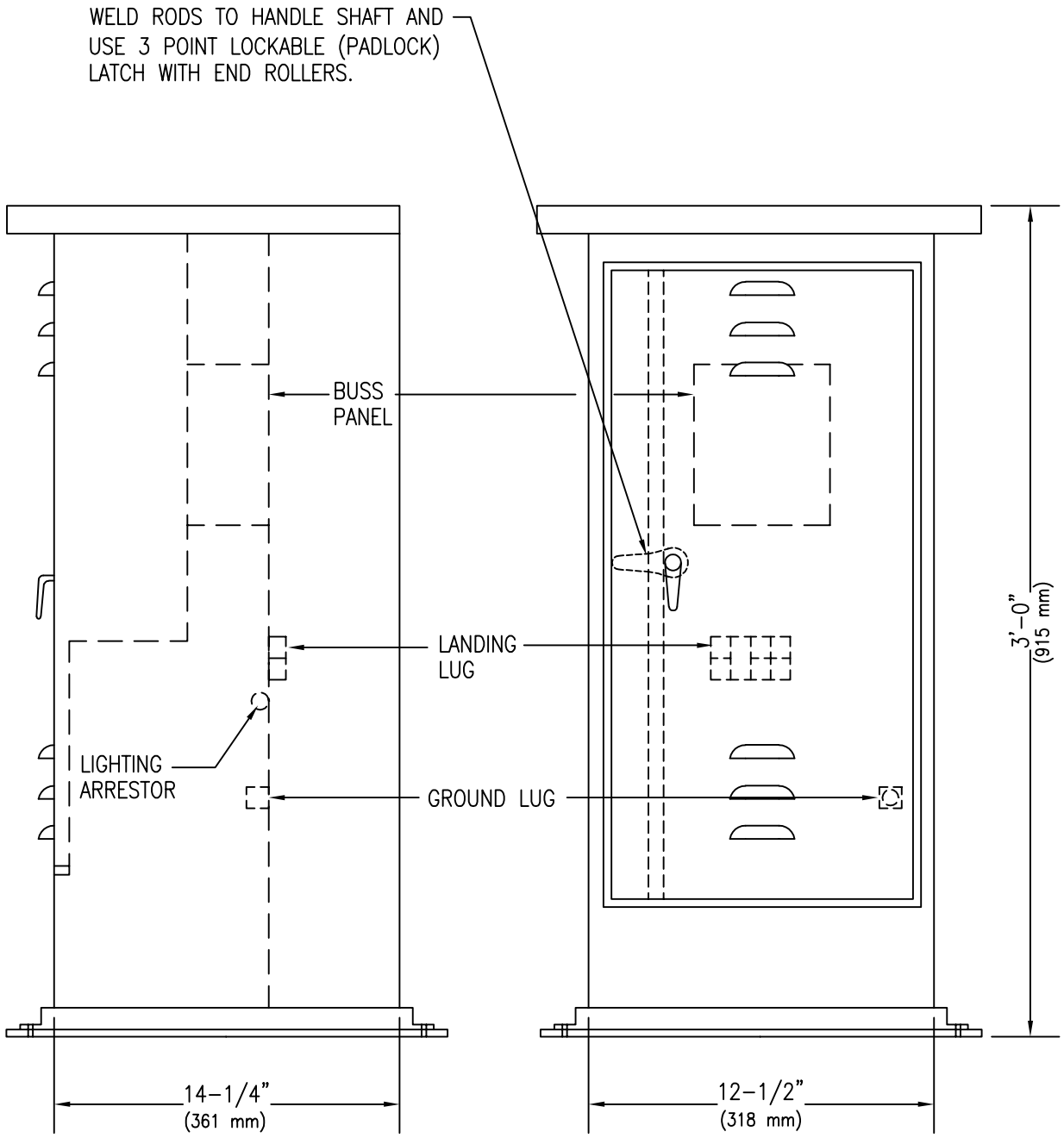

ISSUED:		STANDARD DETAIL		DETAIL NO.
8/92		SERVICE PEDESTAL (UNMETERED)		T 1803
REVISED:				
10/02				SHEET 1 OF 3

TS18-3-1.DWG 12/07/00 15:07

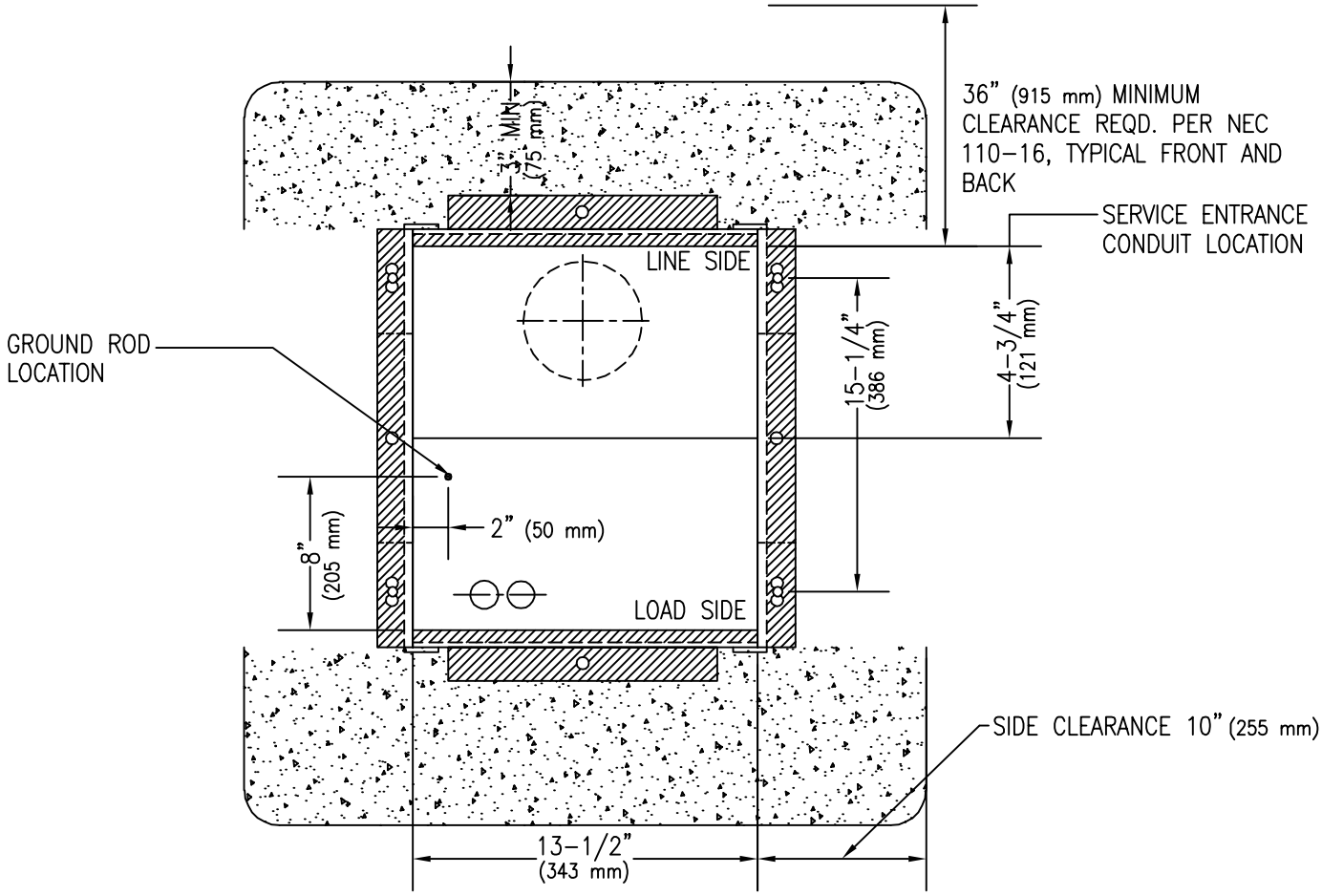

TOP VIEW

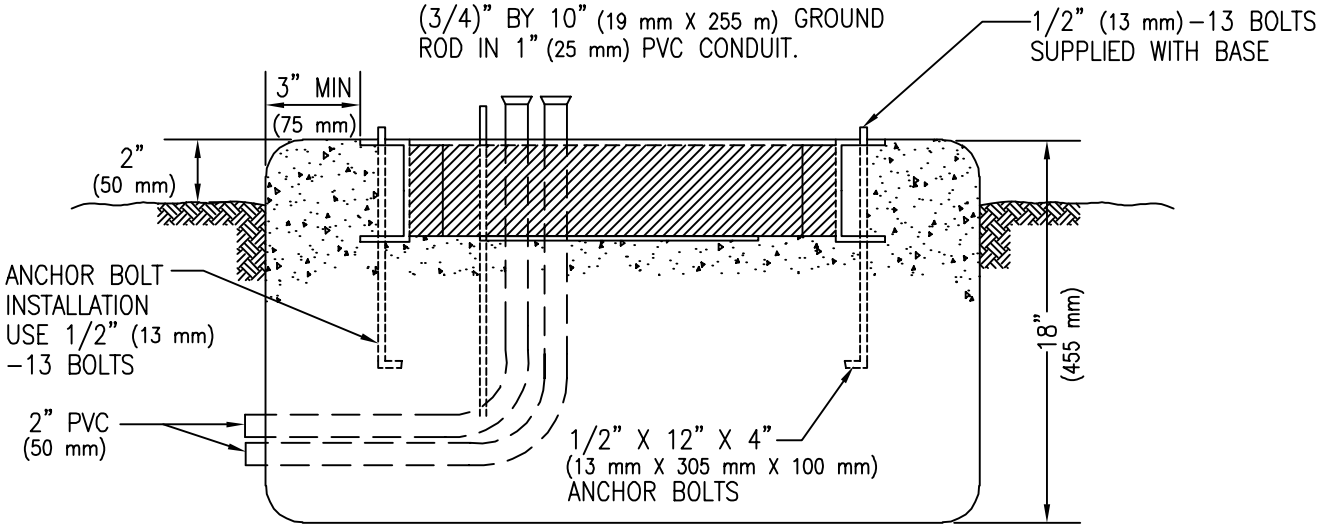

SIDE VIEW

ISSUED:		STANDARD DETAIL		DETAIL NO.
8/92	CITY OF TUCSON FOUNDED 1775	SERVICE PEDESTAL (UNMETERED)	THE SEAL of PIMA COUNTY ARIZONA	T 1803
REVISED: 10/02				SHEET 2 OF 3

TS18-3-2.DWG 12/07/00 15:08

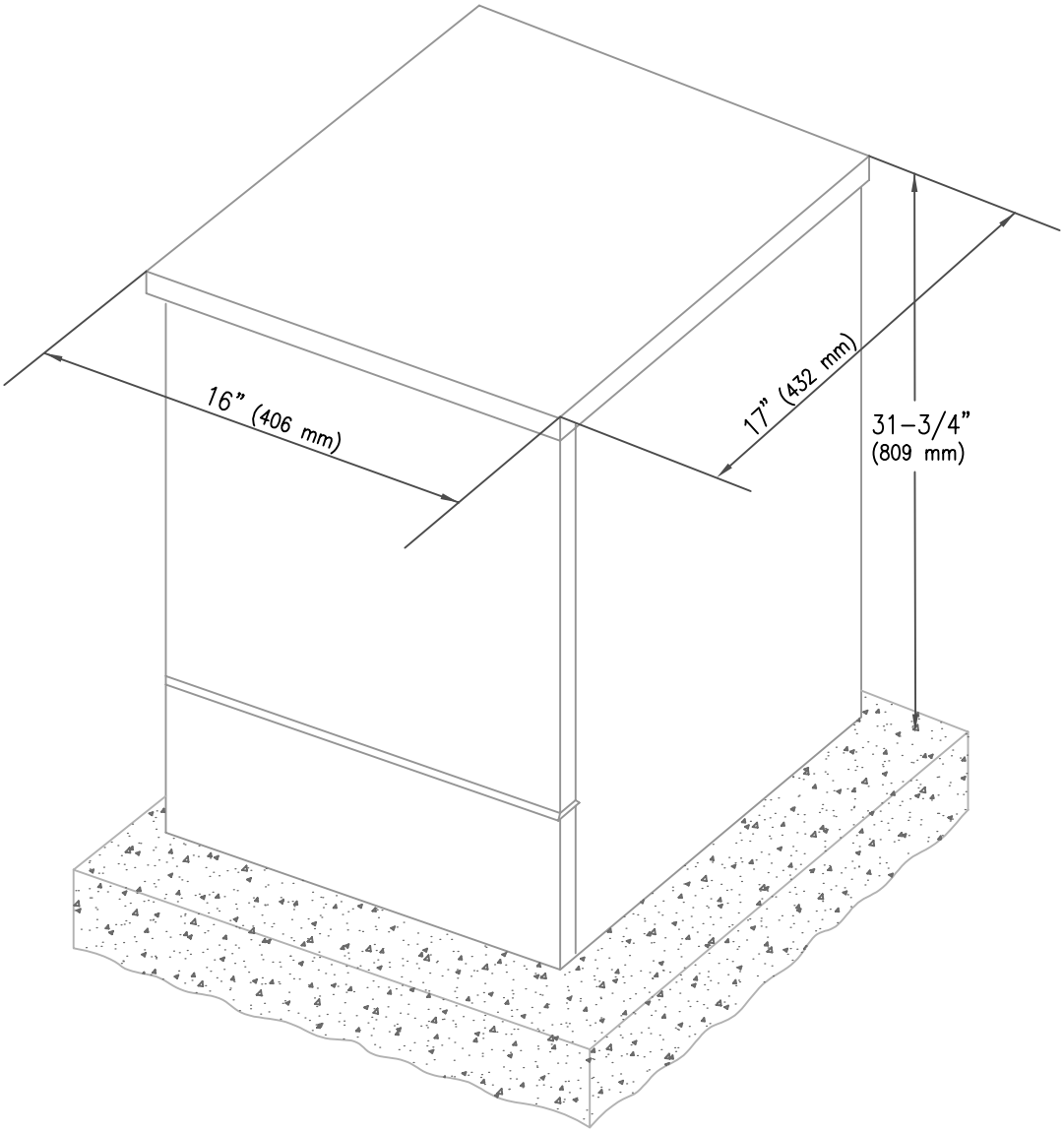

ISSUED:		STANDARD DETAIL		DETAIL NO.
8/92		SERVICE PEDESTAL (UNMETERED)		T 1803
REVISED:				
10/02				SHEET 3 OF 3

TS18-3-3.DWG 12/07/00 15:08

IF SENSOR IS FOR EASTBOUND OR WESTBOUND

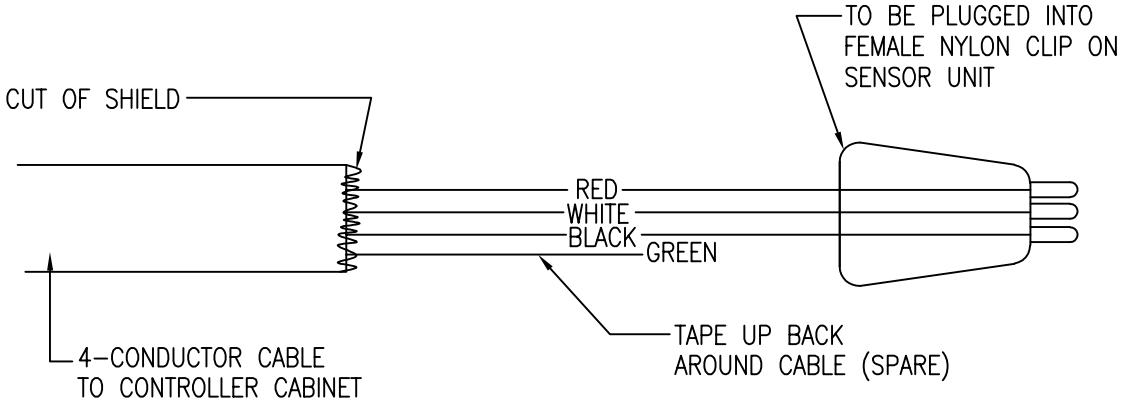

IF SENSOR IS FOR EASTBOUND OR WESTBOUND

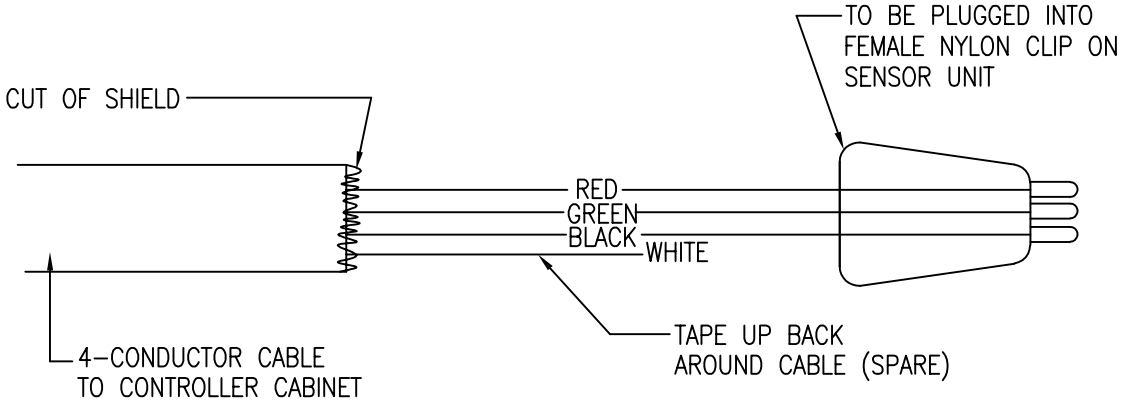

NOTES:

1. CUT OFF SHIELD (NOT USED).
2. RED ALWAYS GOES TO ORANGE WIRE FROM SENSOR'S FEMALE CLIP.
3. BLACK ALWAYS GOES TO BLACK.
4. SENSOR UNIT AND FEMALE CLIP TO BE CITY-SUPPLIED FOR CONTRACTOR TO INSTALL. CONTACT 791-3193.

ISSUED:		STANDARD DETAIL		DETAIL NO.
8/92		PRE-EMPT SENSOR WIRING		T 1901
REVISED:				
10/02				SHEET 1 OF 1

TS19-1.DWG 12/07/00 15:09

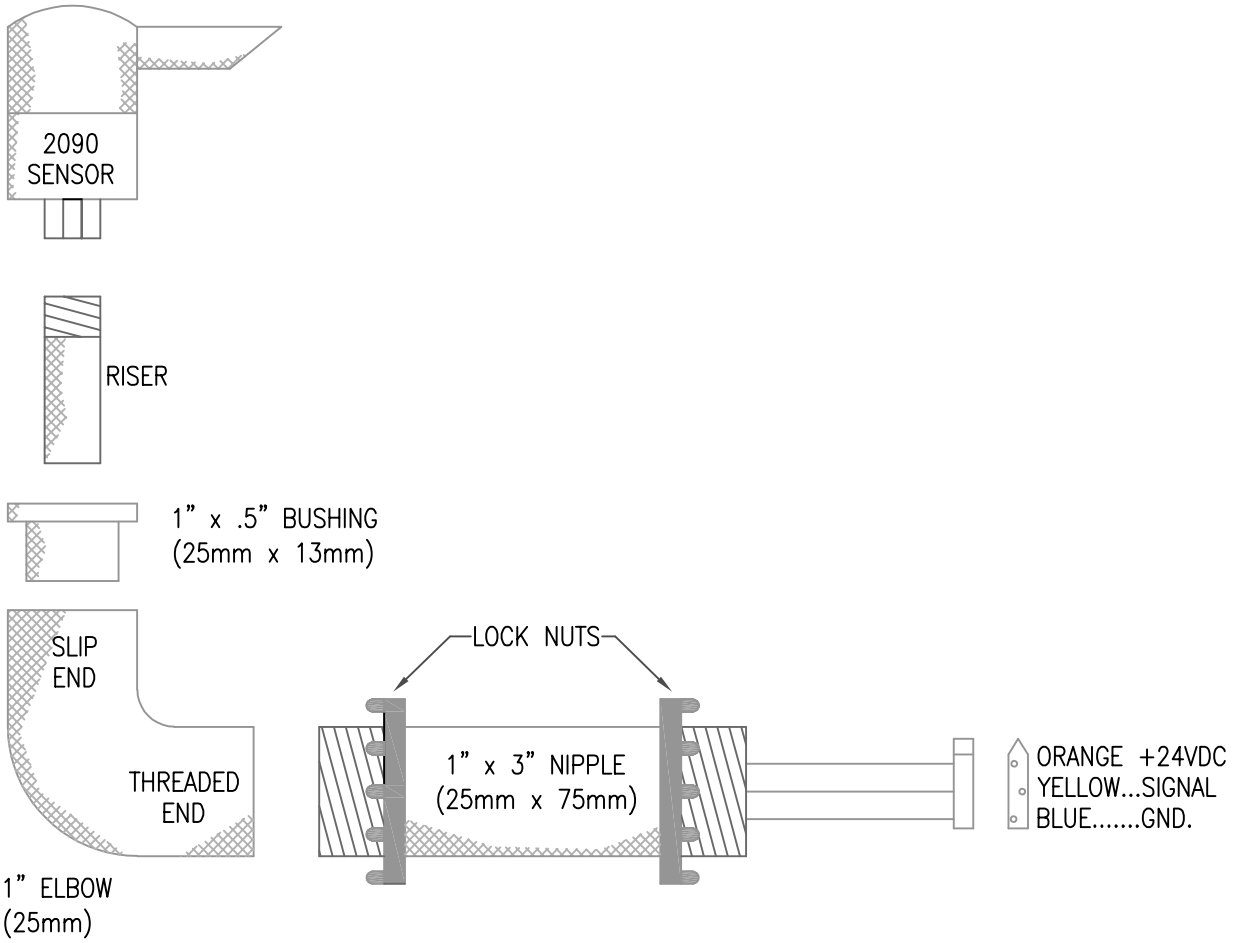

SENSOR ASSEMPLY NOTES:

1. APPLY PRIMER TO RISER CUT END, INSIDE AND OUTSIDE OF BUSHING AND INSIDE SLIP END OF EL.
2. APPLY CEMENT GENEROUSLY TO INSIDE OF BUSHING AND INSIDE SLIP END OF EL.
3. PROMPTLY INSERT BUSHING WITH A QUARTER TURN MOTION INTO EL UNTIL BUSHING BOTTOMS OUT AND HOLD FOR 30 SECONDS.
4. APPLY CEMENT GENEROUSLY TO INSIDE OF BUSHING AND TO CUT END OF RISER.
5. PROMPTLY INSERT RISER WITH A QUARTER TURN MOTION INTO BUSHING UNTIL IT BOTTOMS OUT AND HOLD FOR 30 SECONDS.
6. LET CEMENT CURE FOR 30 MINUTES BEFORE FUTURE ASSEMBLY.
7. TAKE PRE-WIRED SENSOR AND FEED WIRES THROUGH THREADED END OF RISER.
8. THREAD SENSOR ONTO RISER 2 TO 3 TURNS ONLY.
9. THREAD LOCK NUTS ONTO EACH END OF 1" BY 3" (25mm BY 75mm) NIPPLE. SMOOTH SIDE OF LOCK NUTS SHOULD FACE TOWARD CENTER OF NIPPLE.
10. THREAD NIPPLE INTO PVC EL HAND TIGHT.
11. INSERT MOLEX PIN INTO CONNECTOR AS FOLLOWS: ORANGE WIRE INTO POINTED END OF PIN, YELLOW WIRE INTO CENTER HOLE OF PIN CONNECTOR, BLUE WIRE INTO SQUARED END OF CONNECTOR. ASSEMBLY IS NOW READY TO BE JOINED WITH TWO GANG BOX.

ISSUED:		STANDARD DETAIL		DETAIL NO.
8/92		PRE-EMPT SENSOR ASSEMBLY		T 1902
REVISED:				
10/02				SHEET 1 OF 2

TS19-2-1.DWG 12/07/00 15:10

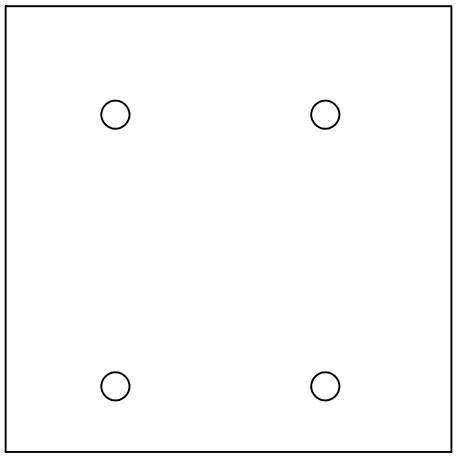

COVER

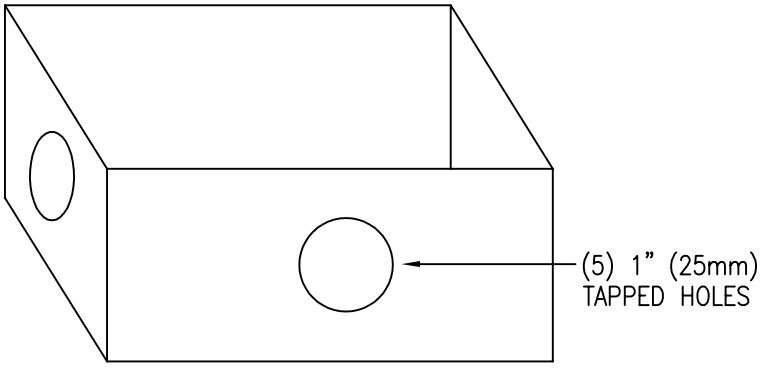

2 GANG OUTLET BOX

2 GANG BOX ASSEMBLY NOTES:

1. FIND SMALL CIRCULAR INDENTATION INSIDE OF TWO GANG OUTLET BOX AND KNOCK OUT A WEEP HOLE USING HAMMER AND PUNCH.
2. APPLY SILICONE TO UNDERSIDE OF OUTLET BOX COVER. DO NOT SILICONE OVER BOLT HOLES.
3. CAREFULLY PUT GASKET ON COVER WITH BOLT HOLES IN CORRECT ALIGNMENT.
4. TAKE 1" x 2" (25mm x 50mm) NIPPLE AND THREAD INTO UNDERSIDE OF OUTLET BOX.
5. PUT WASHER ON NIPPLE AND THREAD LOCK NUT ON.
6. OUTLET BOX CAN BE CONFIGURED WITH ONE OR TWO SENSORS, WITH OR WITHOUT STROBE. HOLE PLUGS COME WITH BOX AND SHOULD BE INSTALLED WITH SILICONE IN ANY UNUSED HOLES TO KEEP WATER OUT. WHEN SENSORS AND A STROBE ARE USED, SENSORS ARE TO BE THREADED ACROSS FROM EACH OTHER AND STROBE OPPOSITE OF BACK PLATE ON SIGNAL HEAD.

ISSUED:		STANDARD DETAIL		DETAIL NO.
8/92		PRE-EMPT SENSOR ASSEMBLY		T 1902
REVISED:				
10/02				SHEET 2 OF 2

TS19-2-2.DWG 12/07/00 15:10

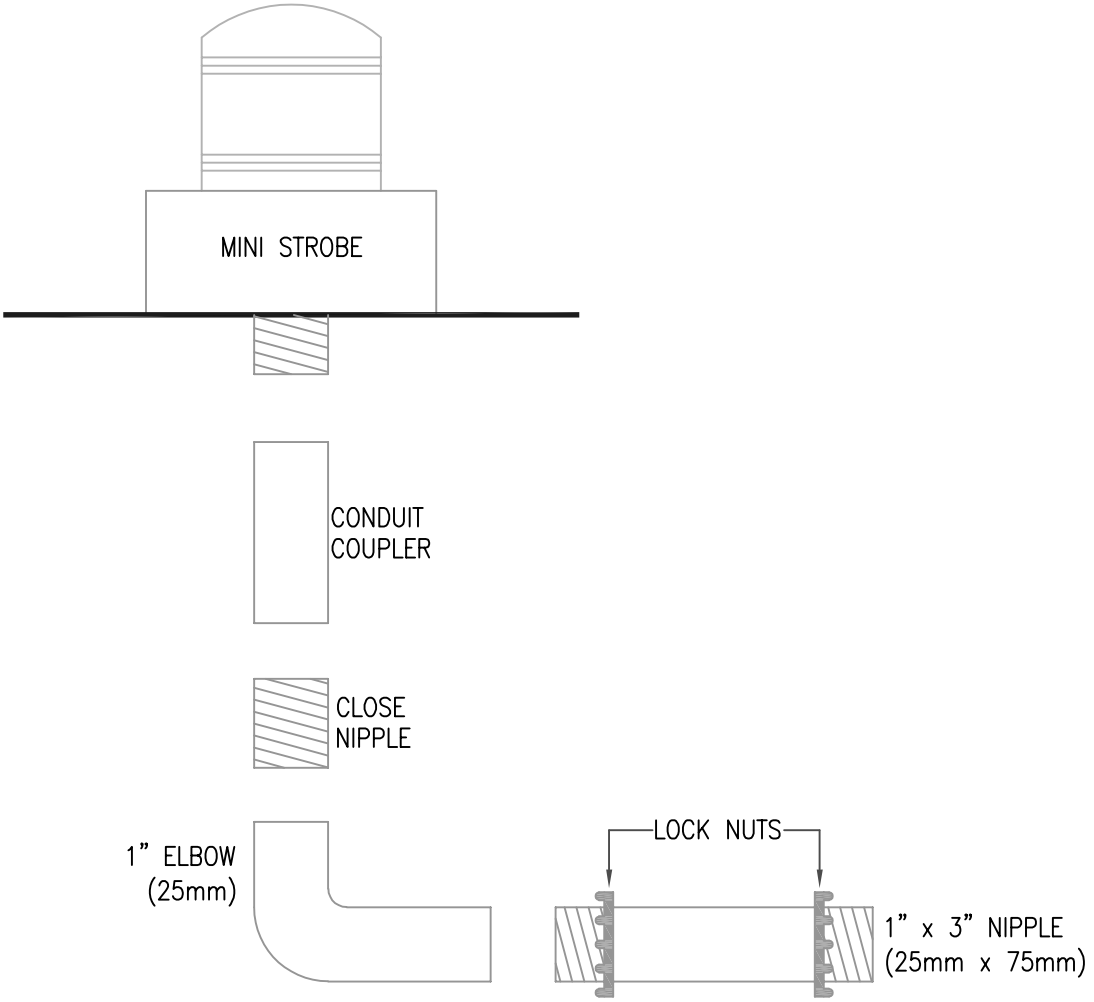

STROBE ASSEMBLY NOTES:

1. STROBE WIRES SHOULD BE PULLED THROUGH EACH PIECE AS IT IS ASSEMBLED.
2. THREAD CONDUIT COUPLER INTO STROBE. SOME STROBES ALREADY COME WITH CONDUIT COUPLER INSTALLED.
3. THREAD CLOSE NIPPLE INTO CONDUIT COUPLER HAND TIGHT.
4. THREAD PVC 1" (25mm) ELBOW ONTO CLOSE NIPPLE UNTIL NO THREADS ARE SHOWING.
5. THREAD CONDUIT LOCK NUTS ONTO 1" BY 3" (25mm BY 75mm) NIPPLE WITH THE SMOOTH SIDE OF LOCK NUTS TOWARDS THE CENTER OF NIPPLE.
6. THREAD NIPPLE INTO 1" (25mm) ELBOW AND TIGHTEN USING PLIERS OR WRENCH. TIGHTEN LOCK NUT AGAINST TO 1" (25mm) ELBOW.
7. STROBE WIRE SHOULD BE AT LEAST 4" LONGER THAN THE ASSEMBLY.
8. STROBE ASSEMBLY IS NOW READY TO JOIN TO TWO GANG OUTLET BOX. SEE STD. DET. T1902, SHEET 2 OF 2.

ISSUED:		STANDARD DETAIL		DETAIL NO.
8/92		PRE-EMPT STROBE ASSEMBLY		T 1903
REVISED:				
11/04				SHEET 1 OF 1

TS19-3.DWG 12/07/00 15:12

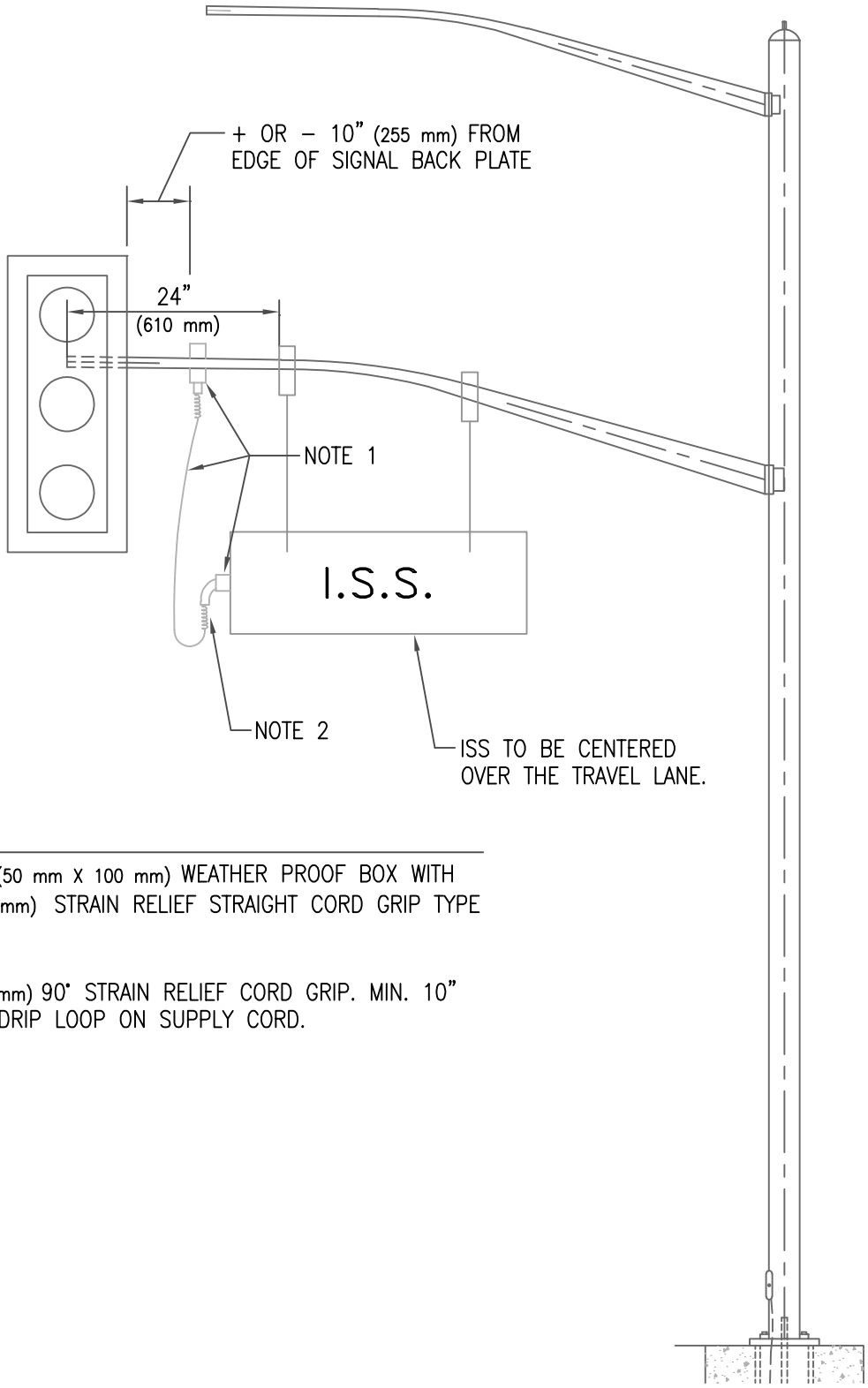

NOTES:

1. 2" X 4" (50 mm X 100 mm) WEATHER PROOF BOX WITH 1/2" (13 mm) STRAIN RELIEF STRAIGHT CORD GRIP TYPE SO 16/3.

2. 1/2" (13 mm) 90° STRAIN RELIEF CORD GRIP. MIN. 10" (255 mm) DRIP LOOP ON SUPPLY CORD.

ISSUED:		STANDARD DETAIL		DETAIL NO.
4/00		ILLUMINATED STREET SIGN (I.S.S.) INSTALLATION		T 1904
REVISED:				
10/02				SHEET 1 OF 1

TS19-4.DWG 12/18/00 14:54

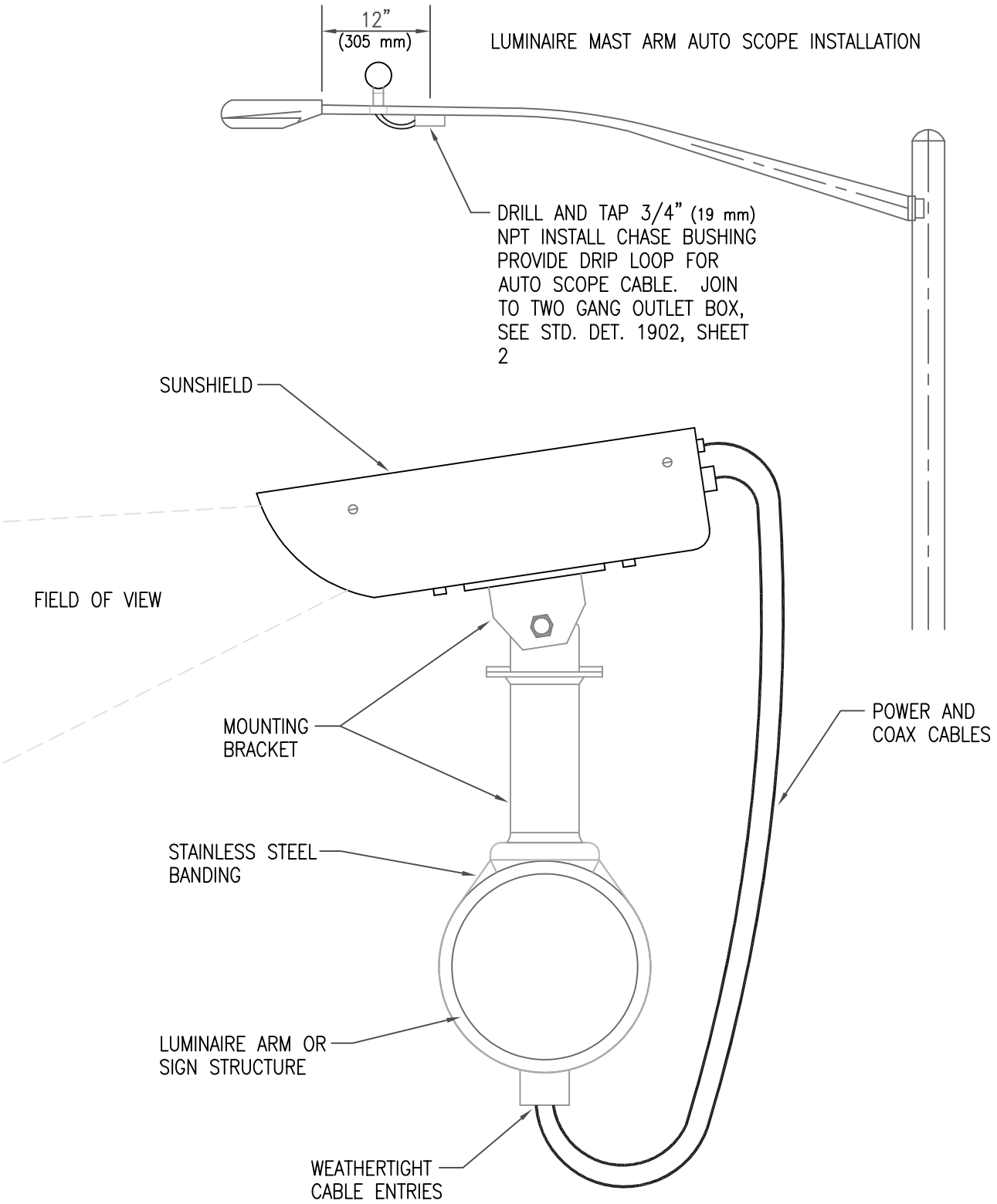

INSTALLED CAMERA

ISSUED:		STANDARD DETAIL		DETAIL NO.
1/00		VIDEO DETECTION SYSTEM AUTO SCOPE INSTALLATION		T 1905
REVISED:				
11/04				SHEET 1 OF 1

TS19-5.DWG 12/07/00 15:16

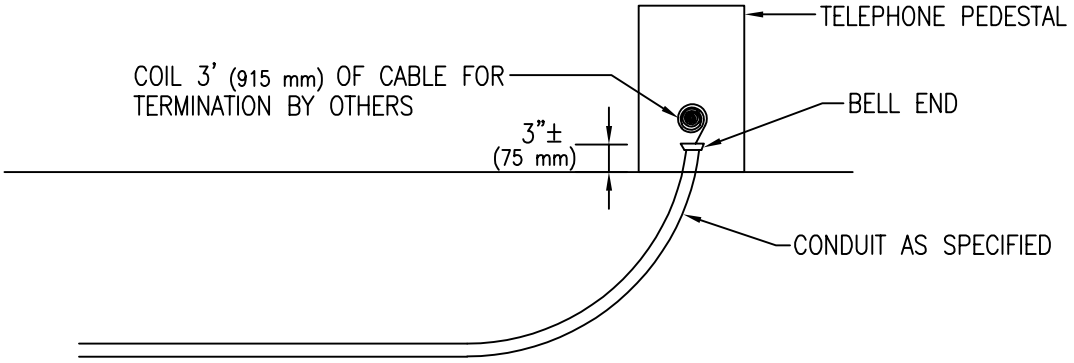

UNDERGROUND DROP

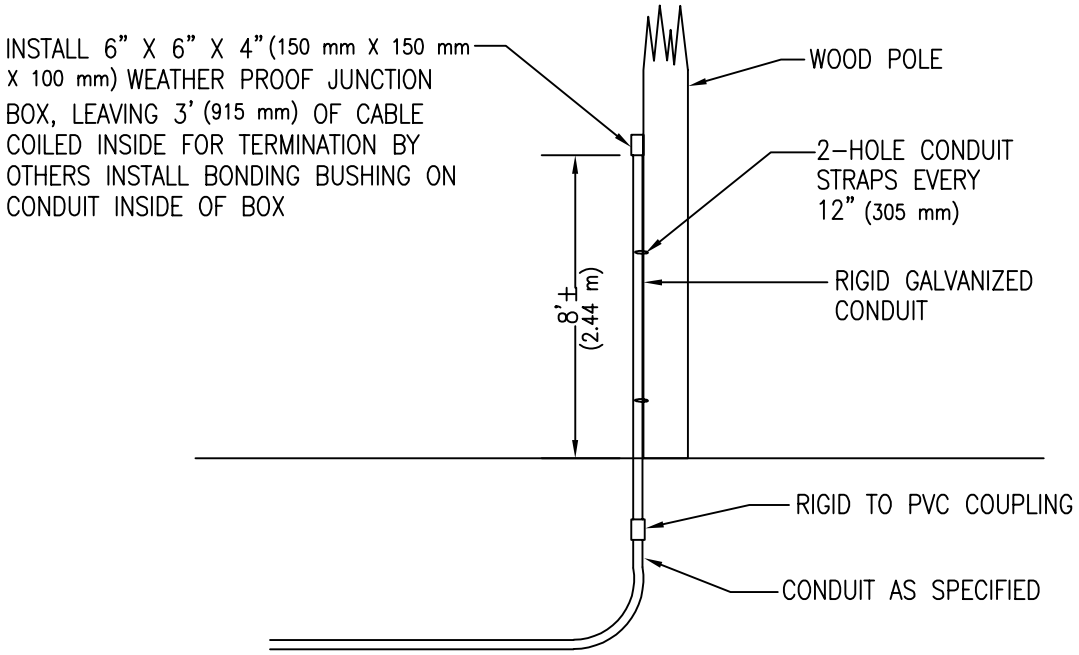

OVERHEAD DROP

ISSUED:		STANDARD DETAIL		DETAIL NO.
8/92		TELEPHONE DROP		T 2001
REVISED:				
10/02				SHEET 1 OF 1

TS20-1.DWG 12/07/00 15:16

WOOD SUPPORT POLE INSTALLATION

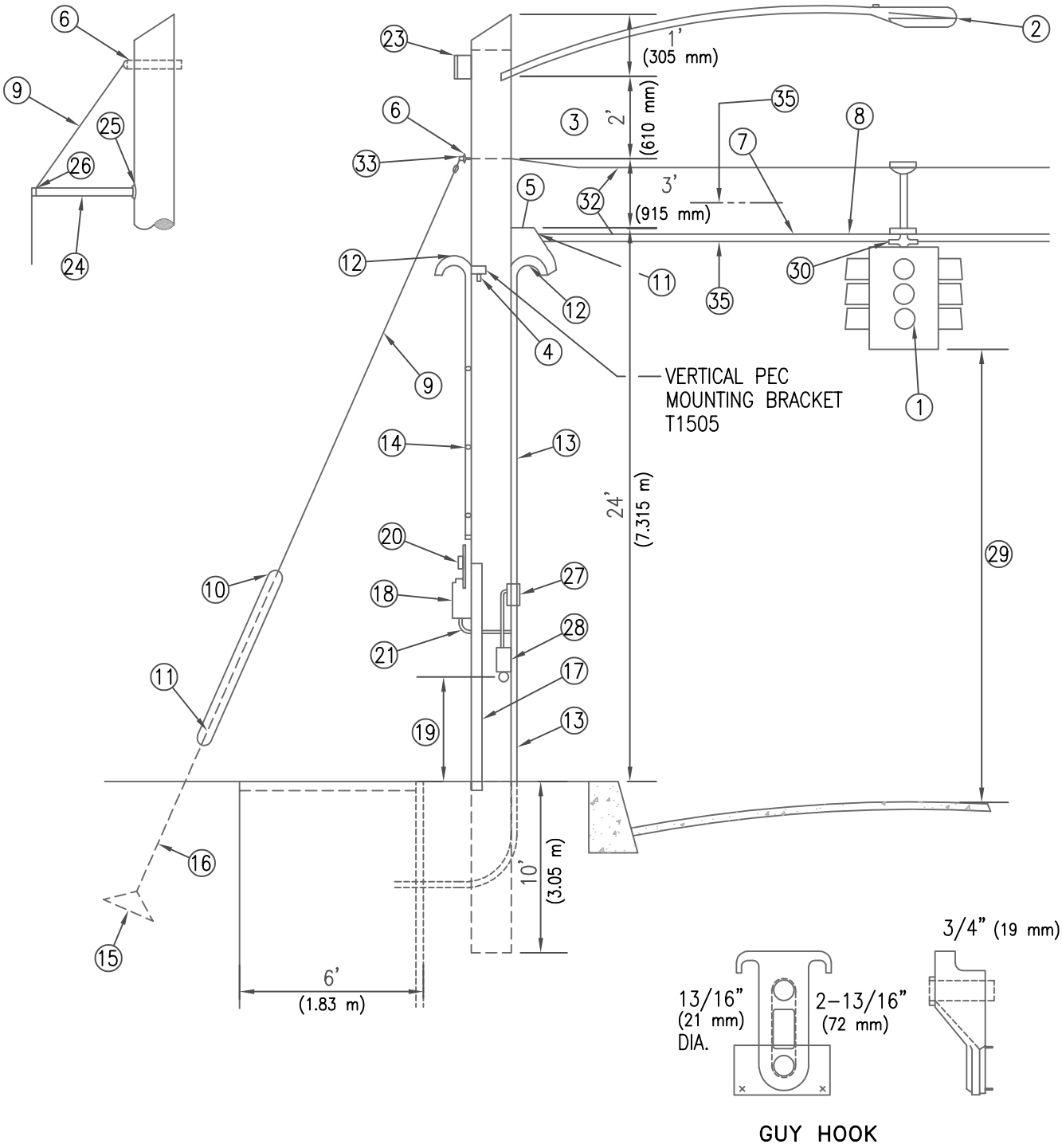

ISSUED:		STANDARD DETAIL		DETAIL NO.
8/92		SPAN WIRE TRAFFIC SIGNAL INSTALLATION		T 2101
REVISED:				
11/04				SHEET 1 OF 3

TS21-1-1.DWG 12/07/00 15:19

STEEL SUPPORT POLE INSTALLATION

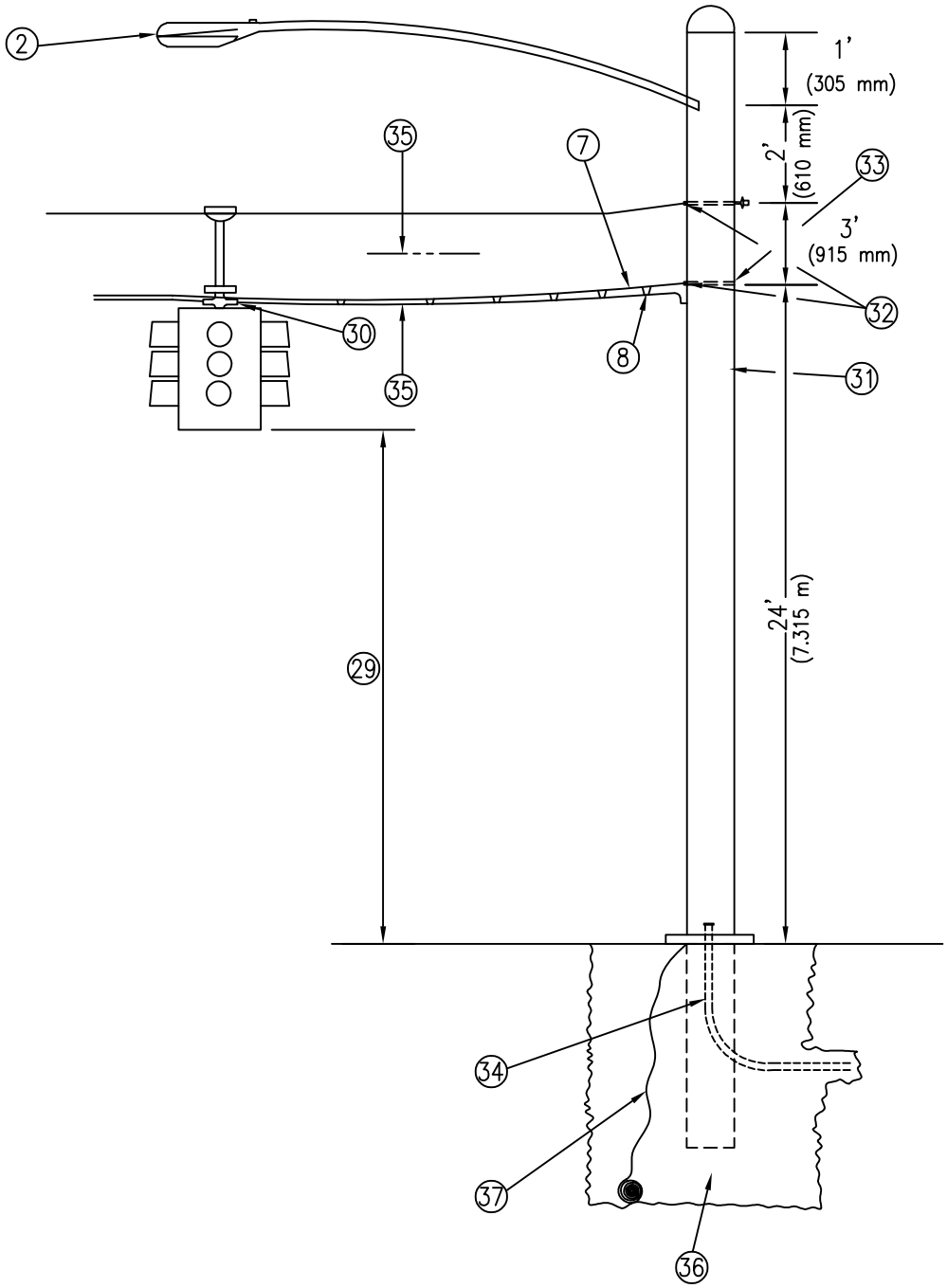

ISSUED:		STANDARD DETAIL		DETAIL NO.
8/92		SPAN WIRE TRAFFIC SIGNAL INSTALLATION		T 2101
REVISED:				
10/02				SHEET 2 OF 3

TS21-1-2.DWG 12/07/00 15:20

1. TRAFFIC SIGNAL ASSEMBLY – AS SPECIFIED.
2. LUMINAIRE AND MAST ARM – AS SPECIFIED.
3. SIGNAL AND LUMINAIRE CONDUCTORS.
4. WOOD POLE – 40' (12.2 m) – CLASS 3 OR BETTER.
5. 5/8" (16 mm) THIMBLE EYE – BOLTS WITH DOUBLE NUTS, AN ALTERNATE TO POLE BAND IF SPECIFIED.
6. GUY HOOK – CHANCE CAT. #C203–0168 OR EQUAL, AN ALTERNATE TO POLE BAND IF SPECIFIED.
7. SPAN WIRE – 3/8" (9.5 mm) STRANDED UTILITY GRADE.
8. WIRE MESSENGER RING – 15" (380 mm) CTR TO CTR OR TIE WRAPS IF SPECIFIED.
9. GUY WIRE – 3/8" (9.5 mm) STRANDED UTILITY GRADE.
10. GUY WIRE GUARD – REFLECTORIZED.
11. 6" (150 mm) – 3 BOLT WIRE CLAMP WITH 5/8" (16 mm) BOLTS – 2 EACH REQUIRED.
12. SERVICE HEAD.
13. CONDUIT – SHALL NOT CONFLICT WITH OTHER TRAFFIC SIGNAL EQUIPMENT TO BE MOUNTED ON POLE.
14. CONDUIT STRAPS.
15. 12" (305 mm) ANCHOR CONE.
16. ANCHOR ROD 5/8" X 8' (16 mm X 2.44 m).
17. GROUND WIRE #4 BARE COPPER – IN 1/2" (13 mm) EMP – INTO SERVICE DISCONNECT OR 10' (3.05 m) FROM GROUND.
18. CONTROL UNIT IF SPECIFIED.
19. 50–1/2" (13 mm)
20. DISCONNECT SWITCH AS SPECIFIED.
21. CONDUIT FITTING WITH BLANK COVER AND GASKET.
22. 3/4" X 10' (19 mm X 3.05 m) COPPER – WELD GROUNDING ROD WITH GROUND ROD CLAMP.
23. SERVICE CLEVIS AS REQUIRED.
24. 2" (50 mm) GALV. PIPE – APPROX. 5' (1.525 m) LONG.
25. SIDEWALK GUY POLE PLATE – HUBBARD 1501 OR EQUAL.
26. SIDEWALK GUY WIRE CLAMP END FITTING HUBBARD 1502 OR EQUAL.
27. "C" TO "T" CONDUIT FITTING.
28. PUSH BUTTON ASSEMBLY.
29. 18' (5.485 m) ±6" (150 mm) TO BOTTOM OF SIGNAL BACKPLATE.
30. TERMINAL HANGER (REQ'D, WITH ALL OPTIONS).
31. 30' (9.145 m) STEEL POLE AS SPECIFIED.
32. PERFORM GRIPS – 1 END ONLY, 3 BOLT CLAMPS REQUIRED ON OTHER END.
33. 4 SEGMENT POLE BAND WITH ROLLERS IS THE PREFERRED METHOD OF ATTACHMENT.
34. P.V.C. CONDUIT SIZE AS SPECIFIED.
35. 5% SAG OF SPAN AT HEIGHT OF POLE.
36. FOUNDATION 36" X 8' (915 mm X 2.44 m). IF SOIL HAS BEEN DISTURBED, FOUNDATION SHALL BE 36" X 10' (915 mm X 3.05 m).
37. #4 GROUND WIRE – 25' (7.62 m) AT BOTTOM OF FOUNDATION.
38. ALL POLES AND MAST ARMS TO BE STRAIGHT AND TRUE.

ISSUED:		STANDARD DETAIL		DETAIL NO.
8/92	CITY OF TUCSON FOUNDED 1775	SPAN WIRE TRAFFIC SIGNAL INSTALLATION	THE SEAL of PIMA COUNTY ARIZONA	T 2101
REVISED: 10/02				SHEET 3 OF 3

TS21–1–3.DWG 12/07/00 15:20