CITY OF TUCSON
TUCSON WATER DEPARTMENT

Tucson Water
Standard Specifications and Details
2011 Edition – Engineering Directive 01-2012

Effective Date: September 14, 2012

SUBJECT: Standard Large Meter Enclosure - SD 314

STATEMENT OF PURPOSE

This Directive shall establish and define the requirements for standard large water meter enclosures. The parameters defined under the general provisions are intended to provide Tucson Water uniform access and security for newly constructed large metering sites. SD 314 was in the previous 2001 version of the Tucson Water Standard Specifications, but omitted from the 2011 version. The Tucson Water New Area Development Engineering Manager retains the authority to deny variations within the stated tolerances, based on their professional judgment and experience.

GENERAL PROVISIONS

- The customer shall install a 10' X 25' (minimum) meter enclosure to protect the new meter assembly, unless approved in writing by Tucson Water. The minimum enclosure height shall be five feet.
- The enclosure shall be made of masonry, chain link fence or other materials approved by Tucson Water.
- A minimum clearance of three feet from the inside of the enclosure structure around the entire periphery of the assembly is required. A minimum clearance of five feet from any overhead structure to the top of the assembly is also required.
- The enclosure shall be graded to allow positive drainage away from the large meter installation. The enclosure shall protect the meter assembly against vandalism, theft and vehicular collision.
- Tucson Water shall have 24-hour access to the meter assembly. Access shall be provided from the top and sides of the enclosure to facilitate meter reading, meter removal and maintenance. At a minimum, a three foot wide lockable walk-in gate shall be provided per Tucson Water Standard Detail 1615.
- The customer is responsible for maintenance and security of the enclosure.
- Prior to construction, the customer shall submit a plan of the enclosure to New Services for approval by Tucson Water.
- Enclosure must be installed within two weeks after completion of the installation of the new water meter assembly.

TUCSON WATER
DISTRIBUTION DESIGN • P.O. BOX 27210 • TUCSON, AZ 85726-7210
(520) 791-2648 • FAX (520) 791-4199 • TTY (520) 791-2639 • www.cityoftucson.org

AUTHORITY

Arizona State Regulations, City of Tucson Ordinances, Tucson City Code and other enabling legislation which affect the production, treatment, distribution and control of potable and reclaimed water.

PROCEDURE

New water system designs which include new large water meter assemblies shall reflect these requirements.

PROCEDURAL RESPONSIBILITY

The Engineering Administrator for Tucson Water and /or designated representative(s) are responsible for the enforcement of this Directive and the associated standards.

RECOMMEND

Ivan Milensky, P.E.
Construction Section Manager
Planning & Engineering Division

CONCUR

Patricia Eisenberg, P.E.
Chief Engineer
Planning & Engineering Division

TUCSON WATER
DISTRIBUTION DESIGN • P.O. BOX 27210 • TUCSON, AZ 85726-7210
(520) 791-2648 • FAX (520) 791-4199 • TTY (520) 791-2639 • www.cityoftucson.org

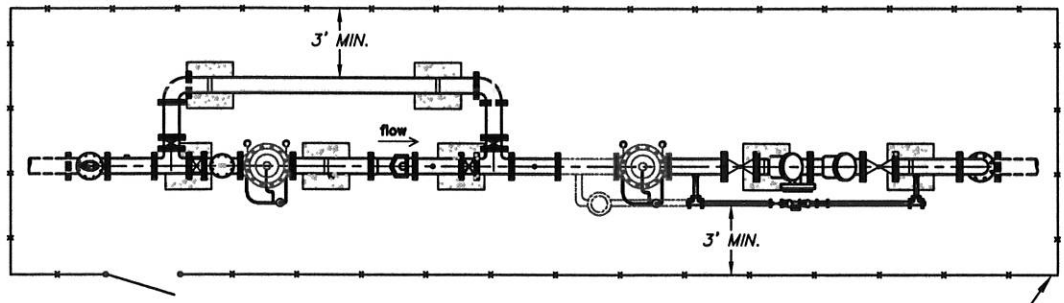

PLAN VIEW

ENCLOSURE (TYP.)

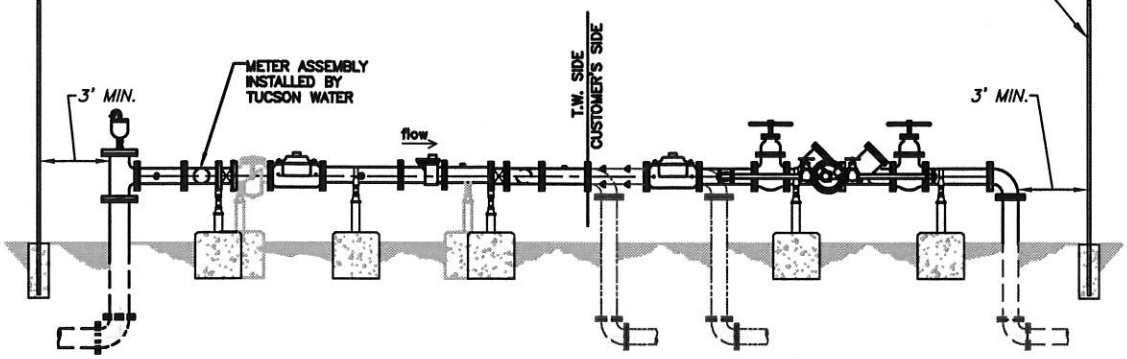

PROFILE VIEW

NOTES:

1. The customer shall install a 10' x 25' (minimum) meter enclosure to protect the meter assembly, unless otherwise approved by Tucson Water. Minimum height shall be five feet.
2. The enclosure shall be made of masonry, chain link fence or other material approved by Tucson Water.
3. A minimum clearance of three feet from the inside of the enclosure structure around the entire periphery of the assembly is required. A minimum clearance of five feet from any overhead structure to the top of the assembly is required.
4. The enclosure shall be graded to allow drainage and shall protect the meter assembly against vandalism, theft and vehicular collision.
5. Tucson Water shall have 24-hour access to the meter assembly. Access shall be provided from top and sides of the enclosure to facilitate meter reading, meter removal and maintenance. At a minimum, on three foot lockable walk-in gate shall be provided per SD-1615.
6. The customer is responsible for maintenance and security of the enclosure.
7. Prior to construction, the customer shall submit a plan of the enclosure to New Services for approval by Tucson Water.
8. The customer shall be responsible meeting all applicable code requirements and obtaining necessary permits.
9. Enclosure must be installed within two weeks after the installation of the water meter assembly.

ISSUED:		STANDARD DETAIL		DETAIL NO.
6/97	TUCSON WATER	STANDARD LARGE METER ENCLOSURE	TUCSON WATER	SD-314
REVISED:				
5/12				SHEET 1 OF 1