NOTE: EACH CASE WILL BE EVALUATED INDIVIDUALLY DEPENDING ON FLOW CHARACTERISTICS.

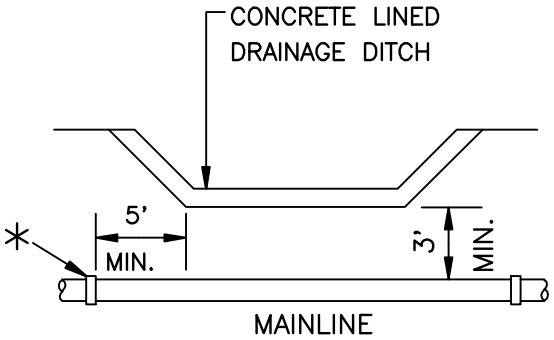

CONCRETE LINED DITCH

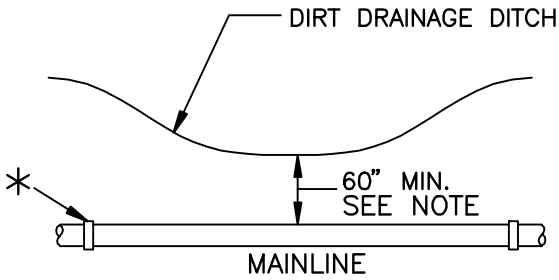

DIRT DITCH

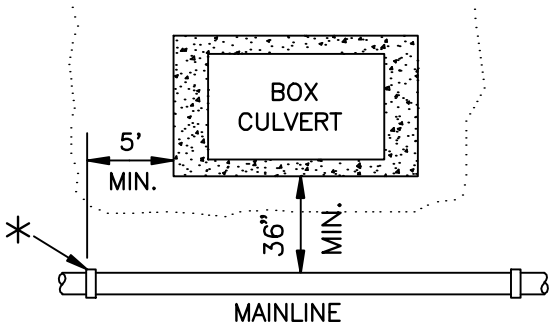

BOX CULVERT

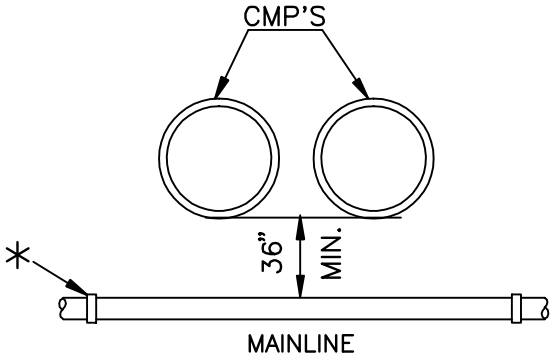

C.M.P.s

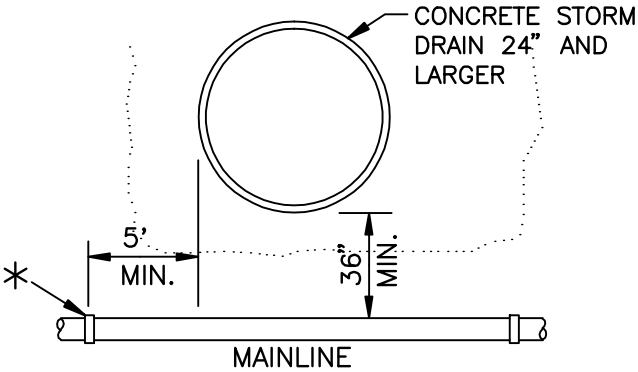

CONCRETE STORM DRAINS 24" & LARGER

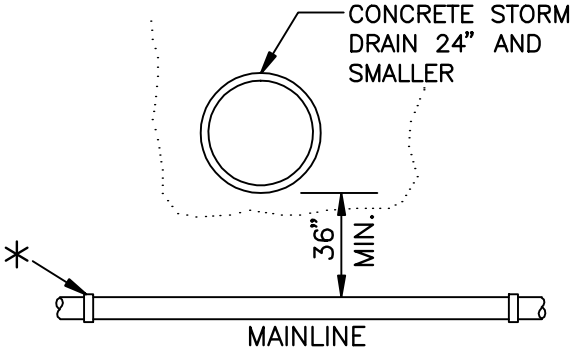

CONCRETE STORM DRAINS LESS THAN 24"

NOTES:

1. ELEVATION DIFFERENTIALS SHALL BE ACCOMPLISHED BY USING VERTICAL BENDS.
2. THRUST RESTRAINT CONSIDERATIONS FOR VERTICAL BENDS SHALL BE IN ACCORDANCE WITH SD-600.
3. MULTIPLE CONCRETE STORM DRAINS OR CMP'S SHALL BE EVALUATED ON A CASE BY CASE BASIS.
4. ALL JOINTS UNDER FACILITIES SHALL BE RESTRAINED.

*ADAPTORS AS REQUIRED

ISSUED:		STANDARD DETAIL		DETAIL NO.
6/97	TUCSON WATER	DRAINAGE FACILITIES CROSSING DETAILS	TUCSON WATER	SD-107
REVISED: 8/09				SHEET 1 OF 2

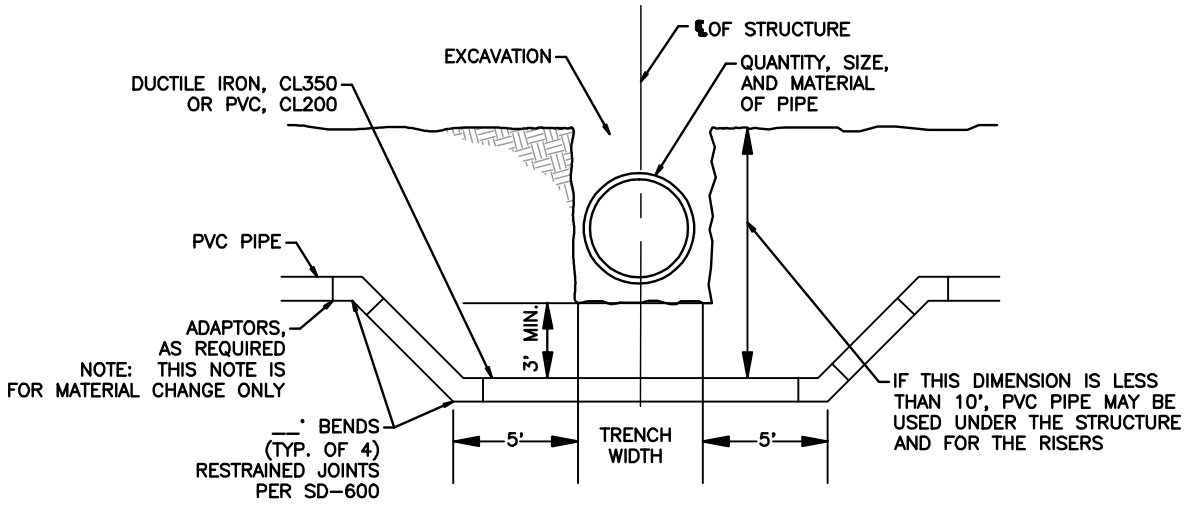

DRAINAGE CROSSING DETAIL

PRE-FABRICATED STRUCTURES

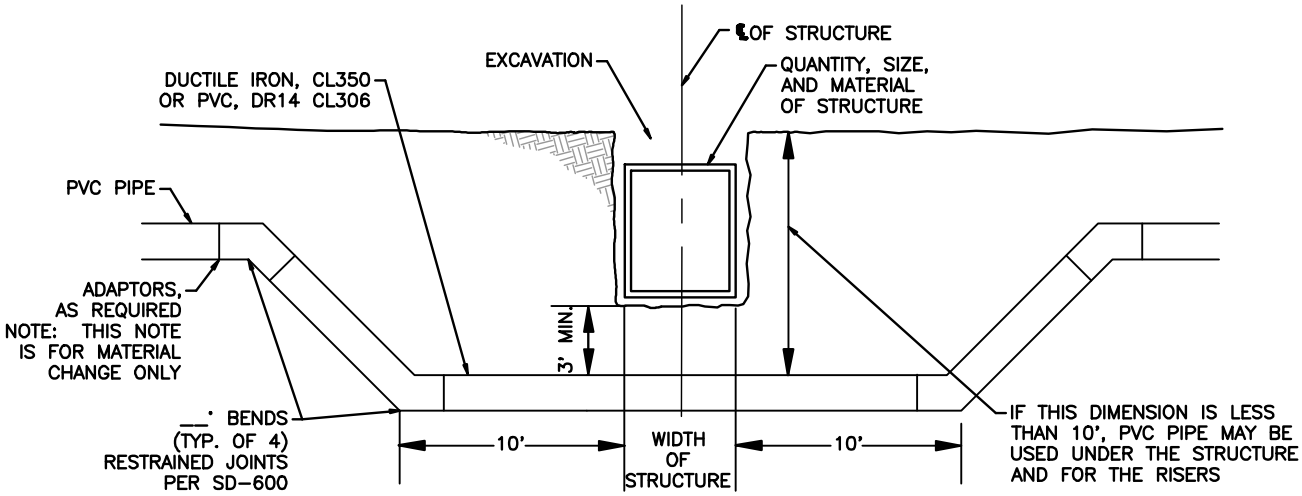

DRAINAGE CROSSING DETAIL

CONSTRUCTED IN PLACE STRUCTURES

ISSUED:		STANDARD DETAIL		DETAIL NO.
6/97	TUCSON WATER	DRAINAGE FACILITIES CROSSING DETAILS	TUCSON WATER	SD-107
REVISED: 8/09				SHEET 2 OF 2