SEE STANDARD SPECIFICATION 0204, 0214, 0501

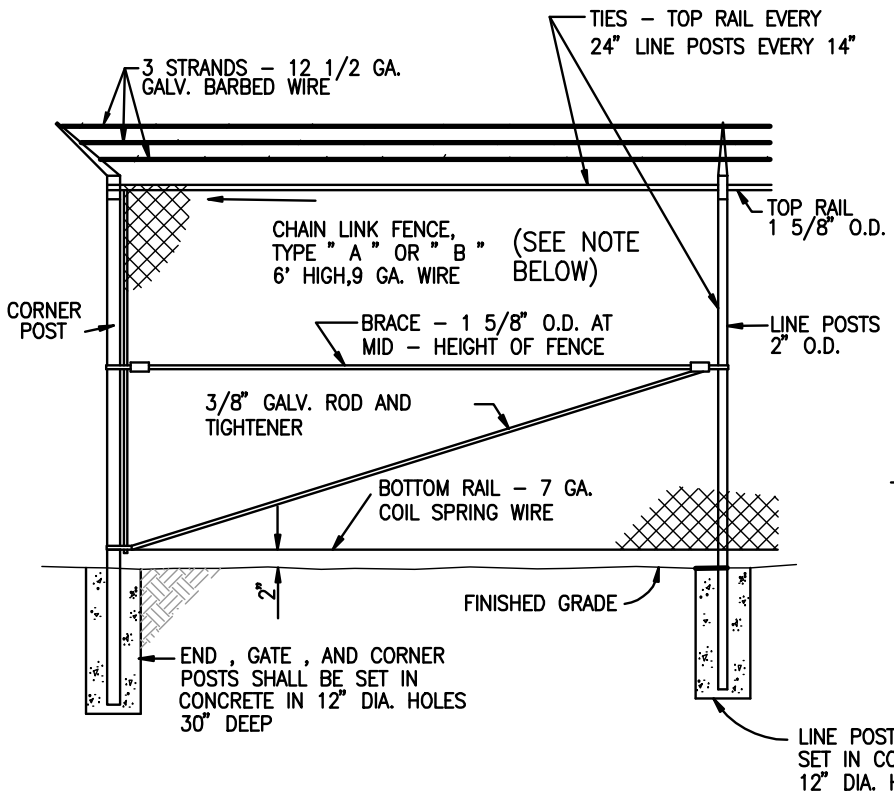

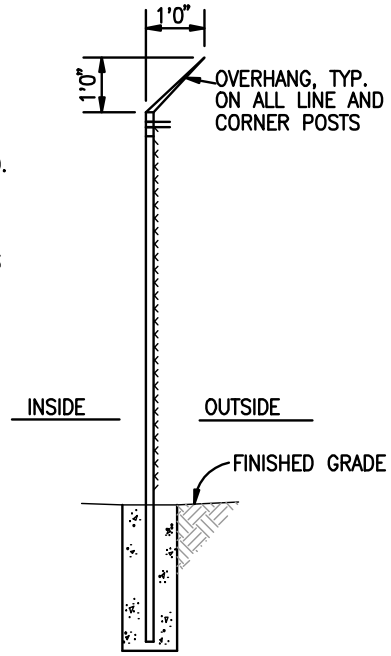

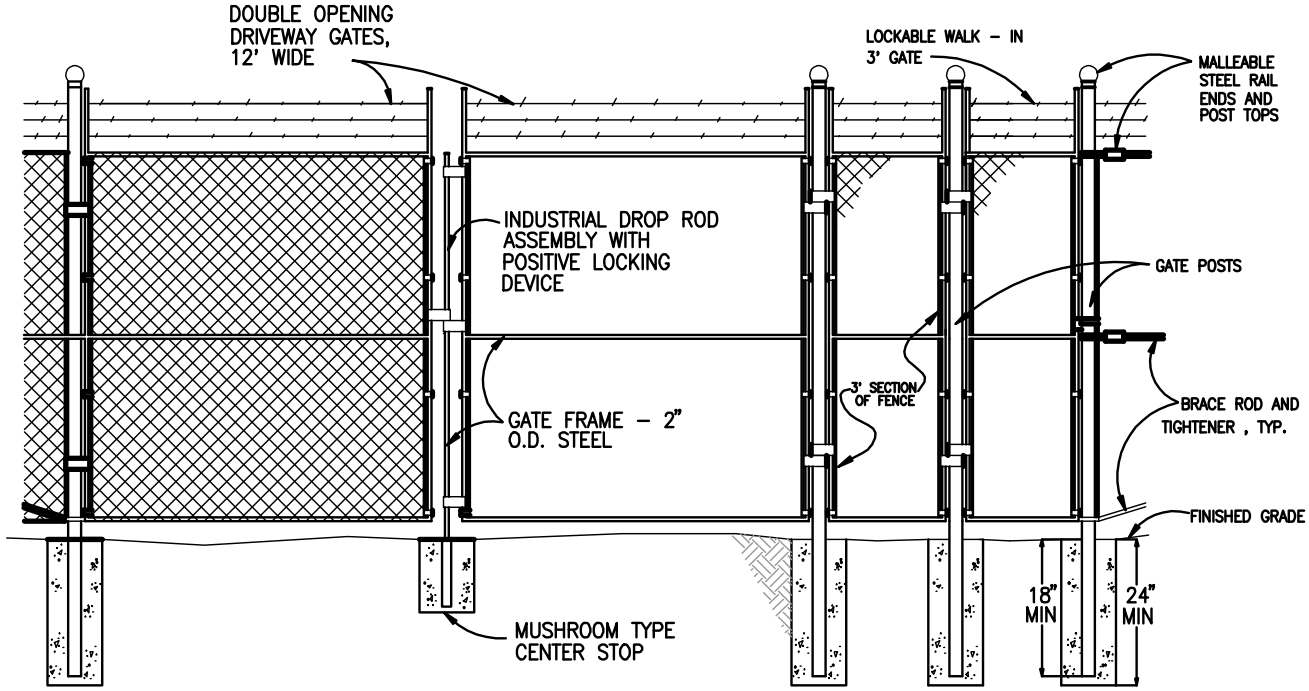

NOTES:

1. TYPE "A" NO SLATS
   TYPE "B" SLATS
2. GATES MUST SWING INWARD AND OUTWARD A MINIMUM OF 120°.
3. CONCRETE SHALL BE CLASS "C" 2500 PSI.

NOTE:

SEE STANDARD SPEC. 0214 FOR ADDITIONAL INFORMATION REQUIREMENTS.

ISSUED:		STANDARD DETAIL		DETAIL NO.
6/97	TUCSON WATER	FENCE INSTALLATION	TUCSON WATER	SD-1615
REVISED:				
1/03				SHEET 1 OF 1